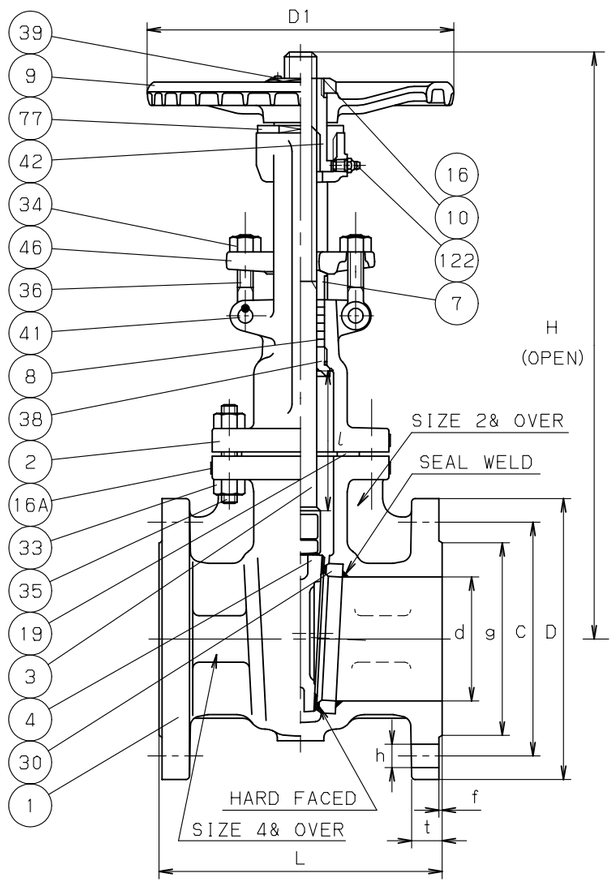

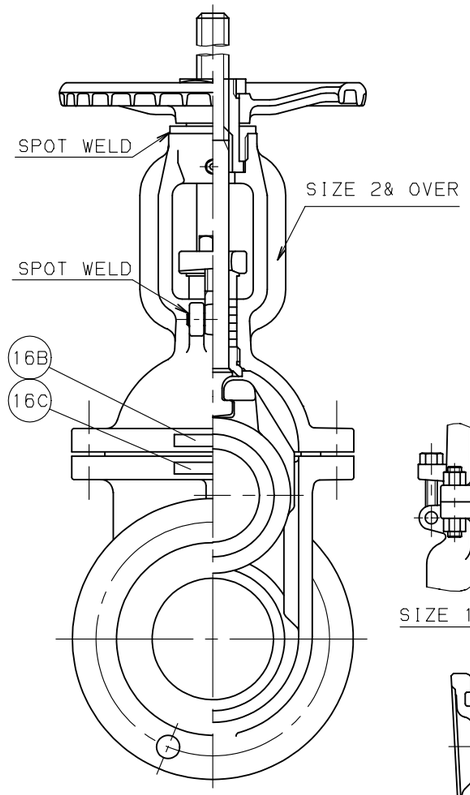

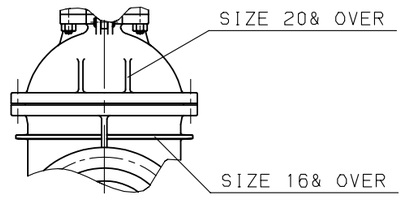

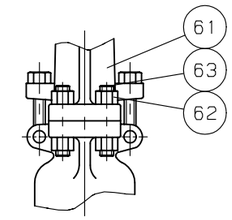

SIZE 14& OVER

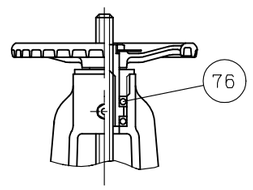

SIZE 14& OVER

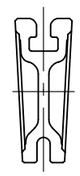

SIZE 5& OVER

KITZ
4 (1)
STEEL
150
WCB

MARKING ON THE BODY

DIMENSIONS. UNIT:mm

NOMINAL SIZE in.	NOMINAL SIZE mm	d	H	D1	L	l	END FLANGE D	BOLT HOLE C	BOLT HOLE NO.	BOLT HOLE h	BOLT SIZE	g	t	f	VOLUME (ℓ)	APPROX. MASS (kg)
1.1/2	40	40	385	200	165	63	127	98.5	4	16	1/2	73	14.3	1.6	0.6	16
2	50	50.5	385	200	178	63	152	120.5	4	19	5/8	92	15.9	1.6	0.9	19
2.1/2	65	65	432	200	190	78	178	139.5	4	19	5/8	105	17.5	1.6	1.3	25
3	80	80	509	250	203	94	190	152.5	4	19	5/8	127	19.1	1.6	1.9	34
4	100	101	592	250	229	118	229	190.5	8	19	5/8	157	23.9	1.6	4.0	46
5	125	125	658	300	254	141	254	216	8	22	3/4	186	23.9	1.6	5.8	63
6	150	151	758	300	267	167	279	241.5	8	22	3/4	216	25.4	1.6	10	78
8	200	203	958	350	292	219	343	298.5	8	22	3/4	270	28.6	1.6	15	123
10	250	254	1162	400	330	273	406	362	12	25	7/8	324	30.2	1.6	34	180
12	300	305	1362	450	356	325	483	432	12	25	7/8	381	31.8	1.6	40	232
14	350	338	1572	600	381	362	533	476.5	12	29	1	413	35.0	1.6	54	336
16	400	387	1692	600	406	411	597	539.5	16	29	1	470	36.6	1.6	84	480
18	450	438	1888	600	432	465	635	578	16	32	1.1/8	533	39.7	1.6	111	575
20	500	489	2123	680	457	524	698	635	20	32	1.1/8	584	42.9	1.6	157	750
24	600	591	2497	760	508	626	813	749.5	20	35	1.1/4	692	47.7	1.6	225	1090

NOTE (1) VALVE SIZE (inch) IDENTIFICATION.
(2) Co-Cr-W ALLOY.
(3) METAL CORRUGATED GASKET WITH FLEXIBLE GRAPHITE.
SIZE 5 ONLY STAINLESS FOIL INSERTED FLEXIBLE GRAPHITE.

NO	NAME OF PARTS	QTY	MATERIALS	SPECIFICATIONS
1	BODY	1	CAST STEEL	SCPH2 / A216 Gr. WCB
2	BONNET	1	CAST STEEL	SCPH2 / A216 Gr. WCB
3	STEM	1	STAINLESS STEEL	A182Gr. F6a OR SUS403
4	DISC	1	STAINLESS STEEL	A182 Gr. F6a OR
				A217 Gr. CA15
				(SIZE 1.1/2-4)
		1	CAST STEEL	A216 Gr. WCB+13CR
				(SIZE 5-24)
7	GLAND	1	STAINLESS STEEL	A276 TYPE403
8	GLAND PACKING	1S	FLEXIBLE GRAPHITE	
9	HAND WHEEL	1	DUCTILE IRON	
10	WHEEL NUT	1	CARBON STEEL	
16A	NAME PLATE	1	STAINLESS STEEL	
16B	LEV PLATE	1	STAINLESS STEEL	
16C	CE PLATE	1	STAINLESS STEEL	
19	GASKET	1	(3)	
30	BODY SEAT RING	2	CARBON STEEL+HF (2)	
33	BONNET NUT	1S	CARBON STEEL	A194 Gr.2H
34	GLAND NUT	2	CARBON STEEL	A194 Gr.2H
35	BONNET BOLT	1S	ALLOY STEEL	A193 Gr. B7
36	GLAND BOLT	2	CARBON STEEL	A576 Gr.1045
38	BONNET BUSH	1	STAINLESS STEEL	A182 Gr. F6a
39	SET SCREW	1	CARBON STEEL	
41	GLAND BOLT PIN	2	STAINLESS STEEL	A276 TYPE403
42	YOKE SLEEVE	1	DUCTILE NI-RESIST	A439 TYPED2
46	GLAND FLANGE	1	CARBON STEEL OR CAST STEEL	A105 OR A216 Gr. WCB
61	YOKE	1	CAST STEEL	A216 Gr. WCB
62	YOKE NUT	8	CARBON STEEL	A194 Gr.2H
63	YOKE BOLT	4	ALLOY STEEL	A193 Gr. B7
76	THRUST BEARING	2	STEEL	
77	SLEEVE NUT	1	STAINLESS STEEL	A276 TYPE403 OR
				A217 Gr. CA15
122	GREASE NIPPLE	1	CARBON STEEL	
			1S=1 SET	

STANDARD		
	FACE TO FACE OR END TO END	ASME B16.10 CLASS 150
	END CONNECTION	ASME B16.5 CLASS 150
	WALL THICKNESS	API 600 CLASS 150
	PRESSURE TEST	API 598
PRODUCT CODE		(H) 150SCLS

CE 0062

LOW EMISSION VALVES level-Ⅱ (Max100ppm.)
CLASS 150 CAST STEEL

GATE VALVES

BOLTED BONNET, OUTSIDE SCREW & YOKE, FLANGED ENDS.

DATE APPD	June.17' 13	DRAWING NO	△		
APPD BY	H. Fuseya	B51-130828	△		
CHKD BY	I. Takano		△		
DSGND BY	H. Komatsu		△		
DRAWD BY	E. Itayama	REV-00	MARK	DATE	BY

KITZ CORPORATION

KITZ

S7-6413