| REV. | DATE | DESCRIPTION |
|---|---|---|
| A | 08/28/00 | REVISE OLD PRINT |
| B | 05/30/04 | UPDATE DRAWING FORMAT |

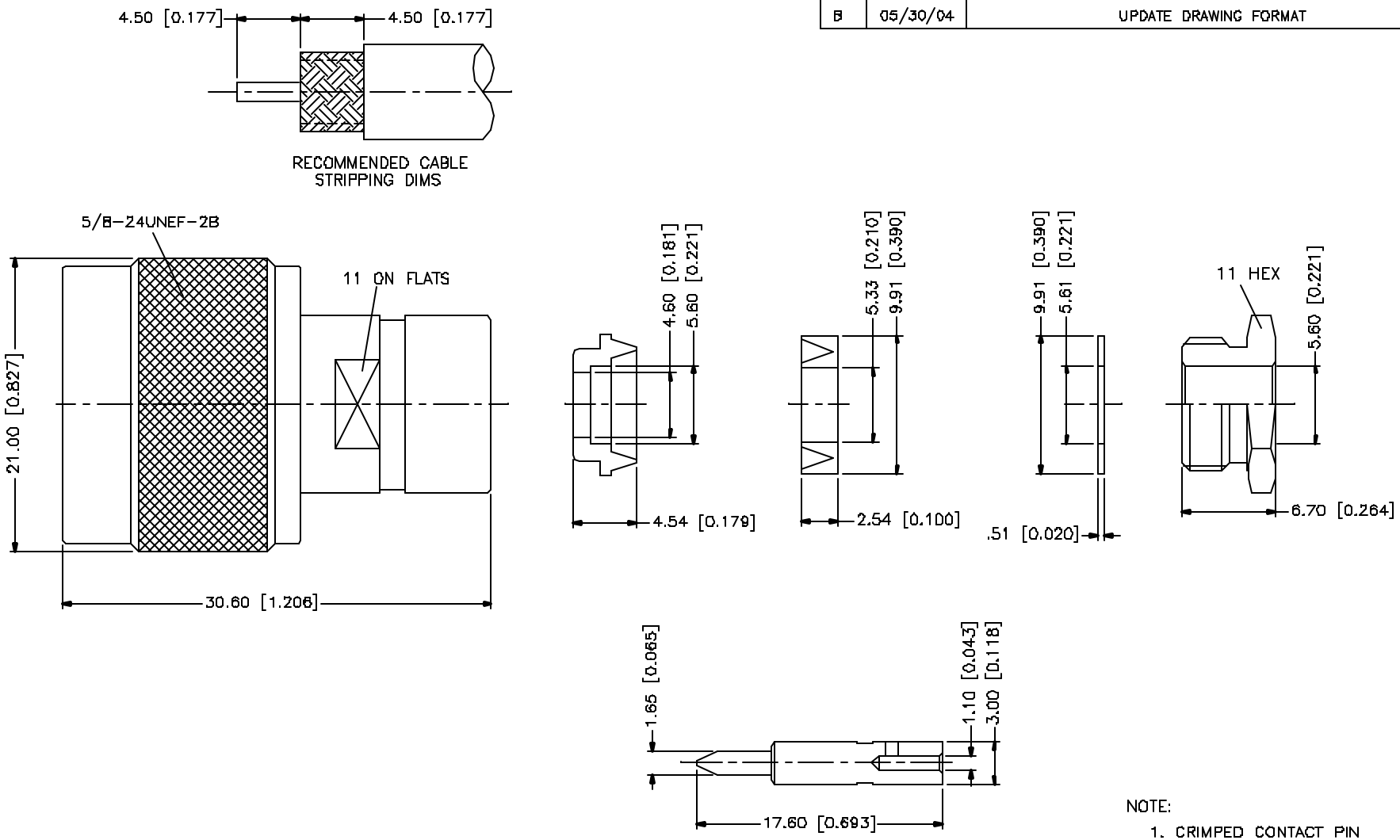


NOTE:

1. CRIMPED CONTACT PIN HEX CRIMP SIZE .100" OR SOLDER.

| | DESCRIPTION | MATERIAL | FINISH | QTY |
|---|---|---|---|---|
| 8 | | | | |
| 7 | HEX NUT | BRASS | NEXCOTE | 1 |
| 6 | WASHER | BRASS | NEXCOTE | 1 |
| 5 | GASKET | SILICONE | RED | 1 |
| 4 | BRAID CLAMP | BRASS | NEXCOTE | 1 |
| 3 | CONTACT PIN | BRASS | GOLD | 1 |
| 2 | INSULATOR | TEFLON | NATURAL | 1 |
| 1 | BODY/SHELL | BRASS | NEXCOTE | 1 |

UNLESS OTHERWISE SPECIFIED DIMENSIONS ARE IN MILLIMETERS. DIMENSIONS IN [ ] ARE IN INCHES AND FOR CUSTOMER REFERANCE ONLY.

UNLESS OTHERWISE SPECIFIED TOLERANCES FOR MILLIMETERS ARE:
0.5 – 6mm ± 0.20mm
6 – 30mm ± 0.40mm
30 – 120mm ± 0.50mm

UNLESS OTHERWISE SPECIFIED TOLERANCES FOR INCHES ARE:
.020 – .315 = ± 0.007"
.315 – 1.180 = ± 0.015"
1.180 – 4.724 = ± 0.020"

DO NOT SCALE DRAWING

| APPROVALS | | DATE |
|---|---|---|
| DRAWN | G.R.S. | 05/30/04 |
| CHECKED | | |
| ISSUED | | |
| SHEET | 1 OF 1 | |

CAD FILE C:/172/172111.DWG

Amphenol Connex

PART DESCRIPTION
N CLAMP PLUG
(FOR RG-58C/U, 58/U, 142A/U, 223/U CABLE)

PART NO. 172111

DWG NO. 172111.DWG | REV. B | SIZE A | SCALE NA