We reserve all rights to this drawing, to any patents or patent registrations related hereto, and to the duplication, retransmission by third parties and misc. use. Any use of this drawing is not permitted without the written consent of STABILUS.

Intended for internal use and customer

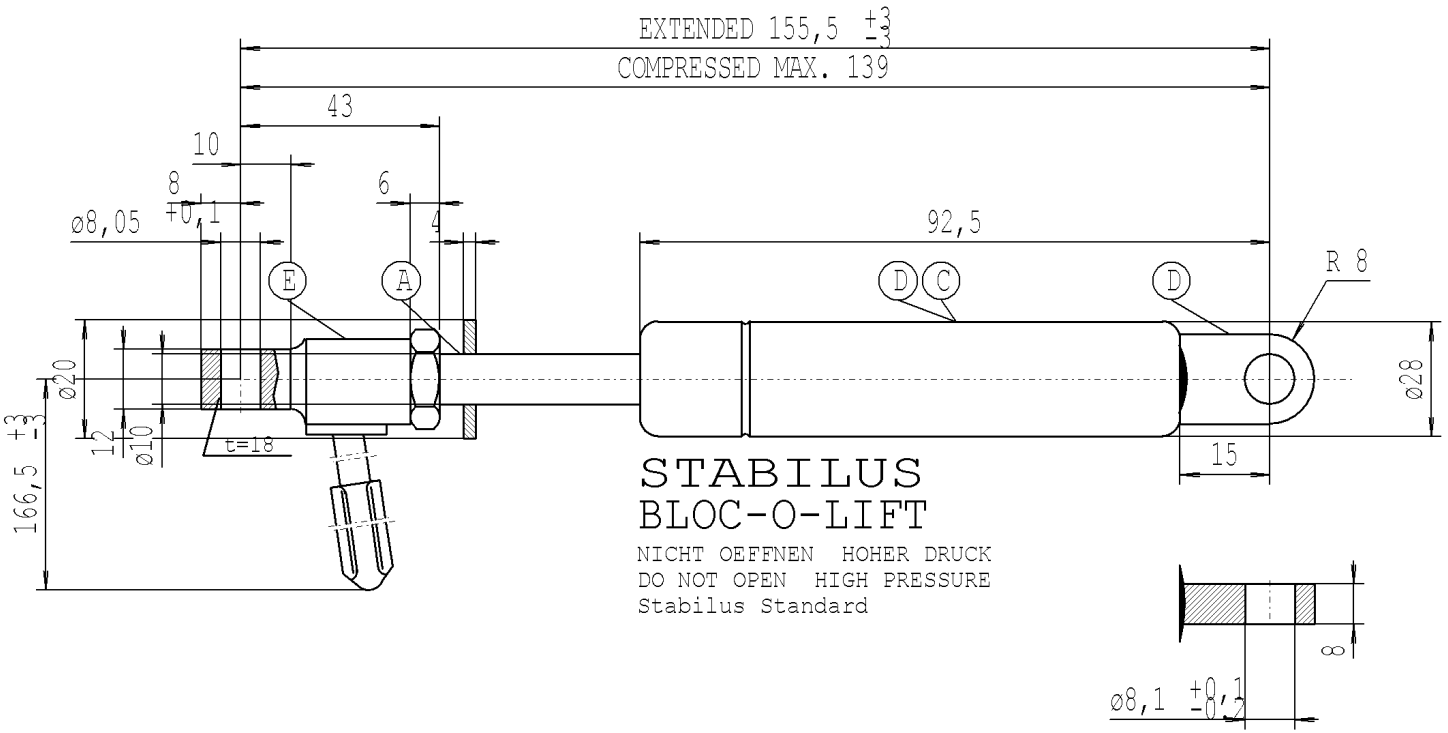

- The gas spring must not be mechanically modified or damaged.
- The warning label must not be removed or obscured.
- compression and extension forces measured acc. to STAB-Spec. 10009033
- Spring test with piston rod downwards

- Protect piston rod from dirt, paint and damage
- Disposal acc. to STAB-Spec.10009375
- Drawing not true-to-scale
- release-force of valve acc. to STAB-Spec. 10005233
- Observe installation instructions according to STAB-Spec. 10005593
- Release of locking: actuate release lever
- Locking: fully release trip lever

- assembly instructions for release head according to SN 10005725
- Permissible operating temperature range -30°C to +80°C
- Installation with piston rod downwards

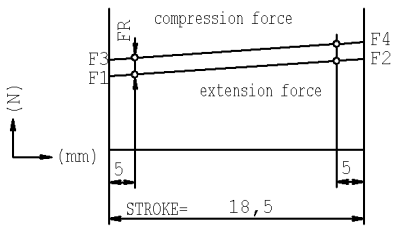

FRmax=F3-F1

X=F2/F1=1,05
Nozzle ø0.6

A	Nislide black
C	print white
D	black painted
E	tightening torque: 7,5 Nm

Forces (statically measured)

F1 (N)	F4 max (N)	FR max (N)
extension force 500 ±40	compression force 650	friction 80

CHANGE					
NEW	ueberarbeitet	ueberarbeitet	ROLLSCHLIESSEN	NISLIDE HELL	UMST. KOST
OLD	-------	------	BODE	NISLIDE SCHWARZ	&
CHG.NO.	1459/91	2316/93	501527	537533	559007
NAME	22.10.91 Schnass	06.10.93 Br	13.03.98 Schnass	17.06.04 SCHNASS	24.08.07 SCHNASS
NO.	2	3	4	5	6

DIMENSIONS WITHOUT TOLERANCE

+/-1

BLOC-O-LIFT

06 13 1024 20 018

Unregistered Copy
Print-out is not subject to the modification service

STABILUS

Modifications in favour of technical process reserved

DRAWING		CHECKED	
DATE	12.03.1991	NAME	TSCHIRPKE

Document No. 10000526

595764

E

***** Druckdatum: 08.05.2012 / 20:26:45 ***** Ausdruck nicht massoetreu *****