GROSCHOPP

Induktions-Gehäuse-Motoren

IP54, unbelüftet

Induction Motor-Housed

IP54, nonventilated

Moteurs à Induction Sous Carter

IP54, non ventilés

IGK

B3

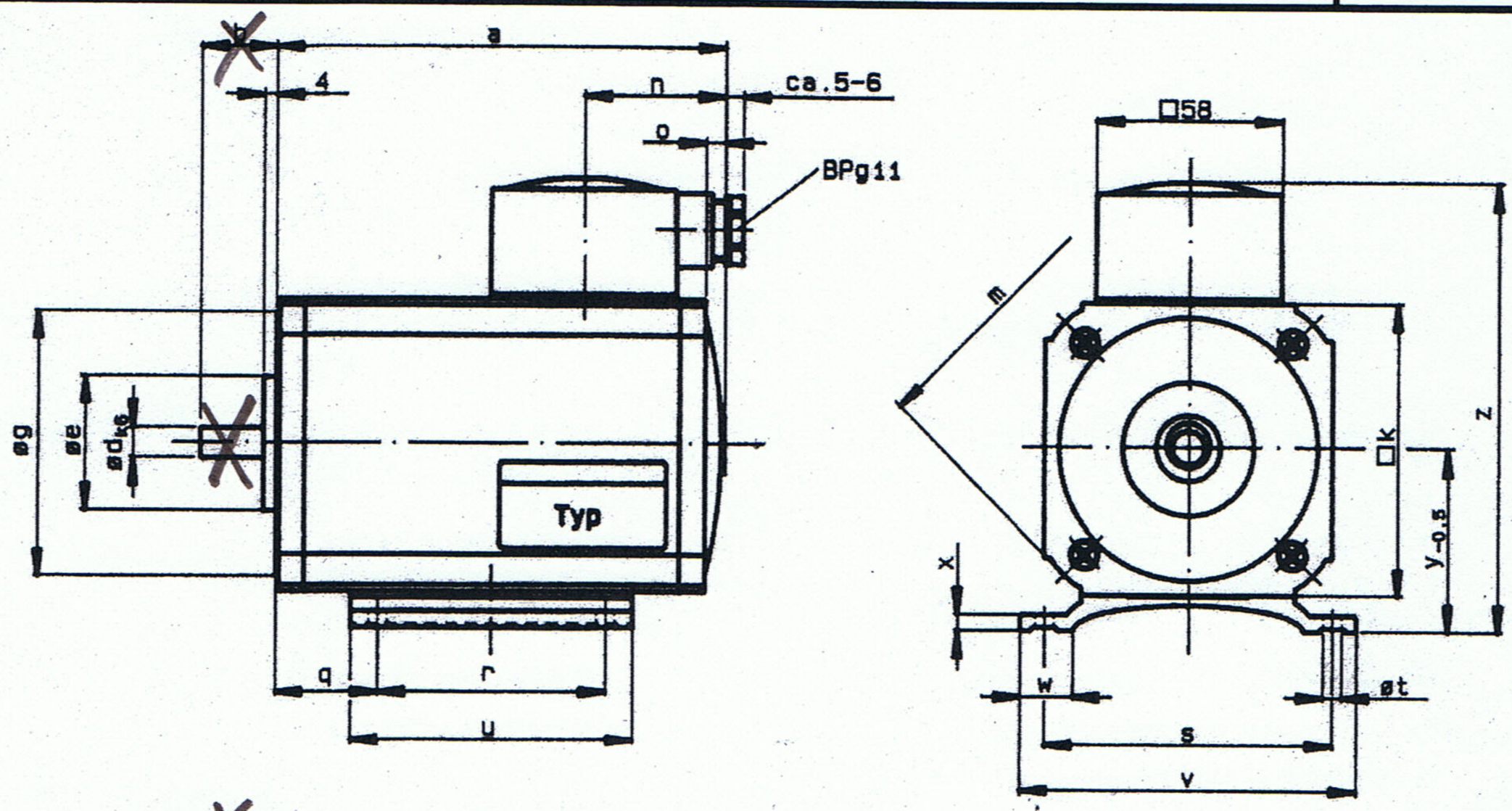

B14

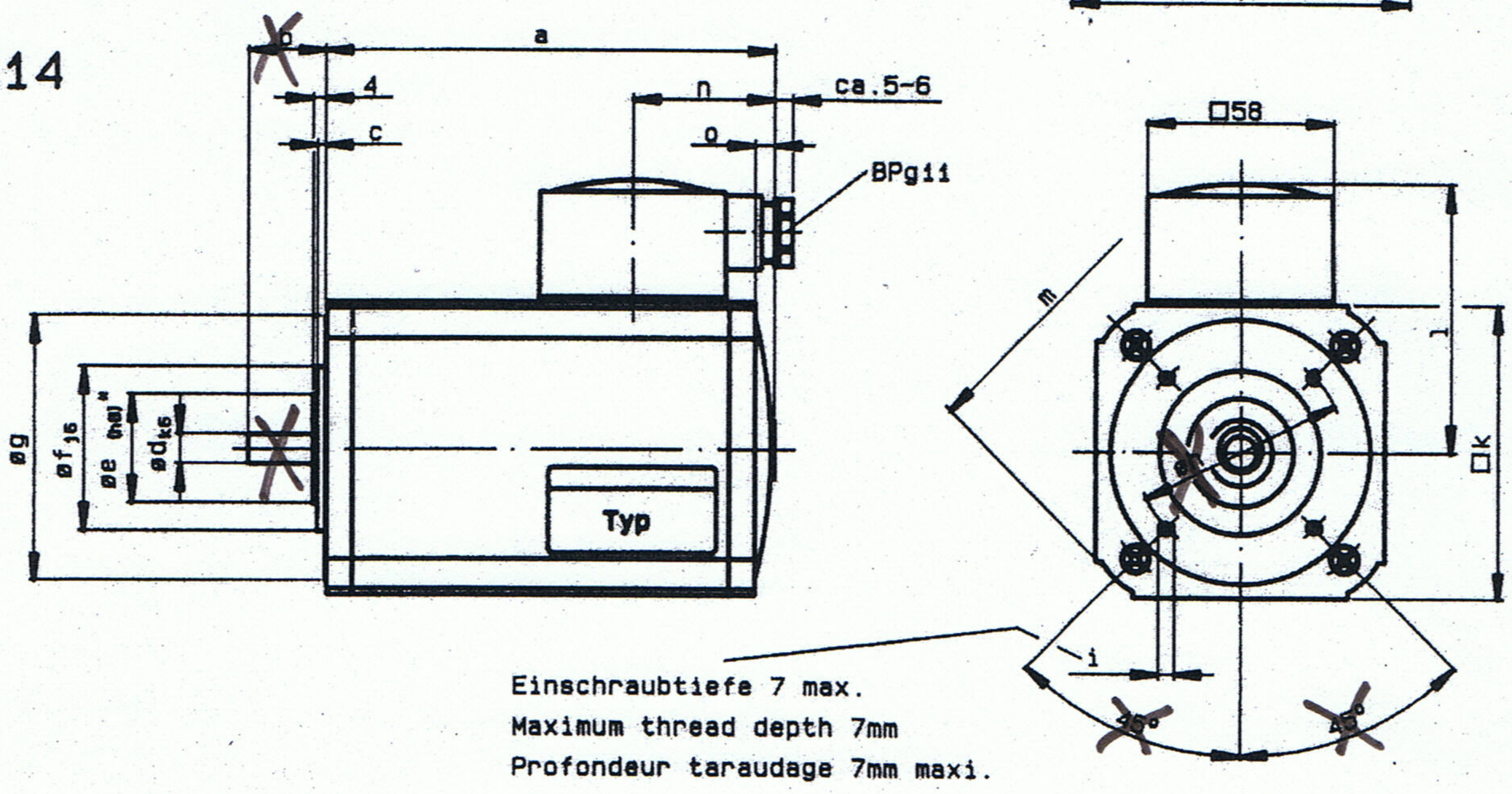

Einschraubtiefe 7 max.
Maximum thread depth 7mm
Profondeur taraudage 7mm maxi.

Maße ohne Toleranzangabe unverbindlich / Dimensions are in mm and for reference only / Cotes d' encombrement (en mm)

Typ	a		b		c	d	e		f	g	h	i	k	l	m	n	o	q	r	s	t	u	v	w	x	y	z	Gewicht Weight Masse (kg)
	B3	B14	B3	B14			B3	B14																				
IGK 65-20	95	94.5	23.5	24	---	9	33	32*	---	66	45	M4	73	74	92	43	5	18.5	54	80	5.8	70	95	16.5	4.5	45	119	1.3
IGK 65-40	115	114.5																28.5										1.8
IGK 65-60	135	134.5																38.5										2.3
IGK 80-20	100	99.5	23.5	24	2.5	9	41	33	50	81	65	M5	90	82.5	110	44	6	12	71	90	5.8	88	105	16.5	5	56	138.5	2.0
IGK 80-40	120	119.5																22										2.7
IGK 80-60	140	139.5																32										3.4
IGK 80-80	160	159.5																42										4.2
IGK 90-40	127.5	127	26.5	27	2.5	11	41	42	60	91	75	M5	100	87.5	123	44.5	6.5	21	80	100	7	102	120	21	6	63	150.5	3.4
IGK 90-60	147.5	147																31										4.3
IGK 90-80	167.5	167																41										5.2
IGK 100-60	151.5	151	33.5	34	2.5	14	41	42	70	101	85	M6	112	93.5	137	44.5	6.5	28	90	112	7	115	135	23.5	7	71	164.5	5.3
IGK 100-80	171.5	171																38										6.3
IGK 100-100	191.5	191																48										7.3