Date:2018.08.10 Time:23:30:28 ユーザ: KAC Technical Service NAOHIKO TSUDA

GENERAL TOLERANCE FOR MACHINING	RANGE	OVER0.5 TO 3	OVER 3 TO 6	OVER 6 TO 30	OVER 30 TO 120	OVER120 TO 315	OVER315 TO 1000	OVER1000 TO 2000	OVER2000 TO 4000	OVER4000 TO 8000
	TOLERANCE	±0.15	±0.2	±0.5	±0.8	±1.2	±2	±3	±4	±5

GENERAL TOLERANCE SHALL CONFORM TO KES 04.052.0.

REVISION	'89.11.18	(元図 92-4-419422-0)						
△1 × 1/1	'91.06.04	型式誤記訂正	谷	△2 × 2/2	'12.01.13	JISキー対応の為、公差変更する	村上	
△ × ./.				△ × ./.				

1/1 92-4-427887 0 △2

CODE NO. S55K9

REVISE ONLY ON CAD

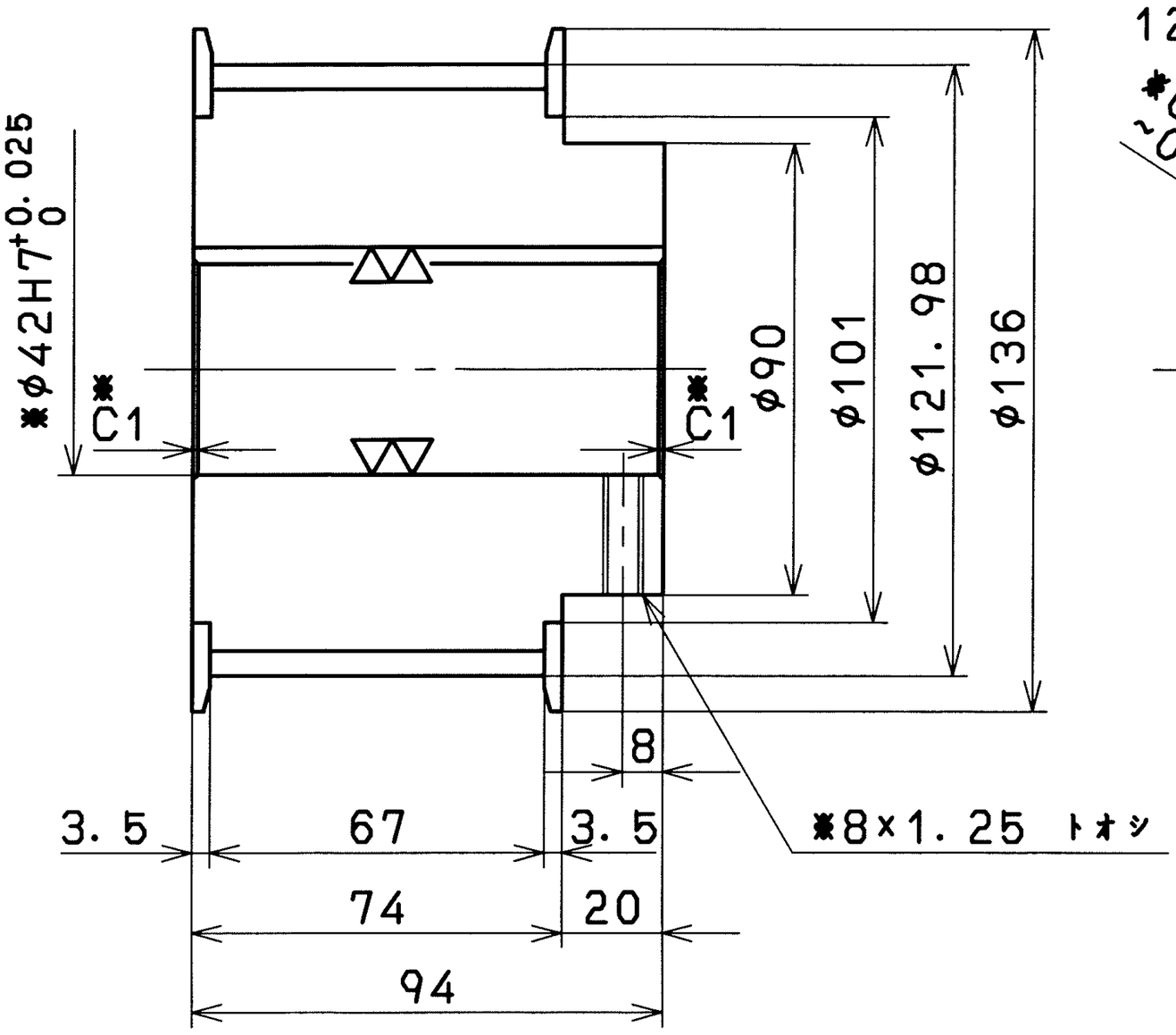

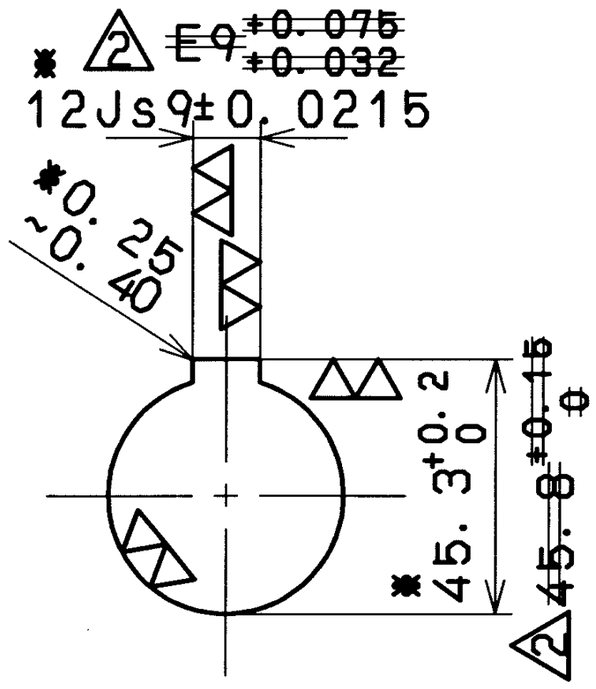

1. 三ツ星 タイミングプーリ（ベルト幅60）
0600△1
型 式：28S14M~~0400~~（B形）
フランジ（F-23136101）ヲ付属ノコト

2. ※印7ヶ所追加エスル

7.5kw×6p

環境負荷物質は KES 07.000.1 遵守のこと
SUBSTANCES OF CONCERN SHALL CONFORM TO KES 07.000.1

電子出図 KOMATSU 2018/08/10 KM02554 複製厳禁

SYM.	PART NAME	MATERIAL	Q'TY/SET	MASS (kg)	REMARKS

APPLICATION	Q'TY
△	
△	
105006 △2	1
190T915 △1	1
19T0100 △.	1

3RD ANGLE P.	MASS (kg)	PORTION	HEAT TREATMENT	CASE DEPTH	MATERIAL
	6.6	.	.	.	PURCH

PROJECT MANAGER	CHIEF DESIGNER	DESIGNER	CHECKED BY	DRAWN BY	COPIED BY	DATE	PART NAME	PAINT OR SURFACE TREAT. CODE
青島	谷家	砂田	徳丸	花木	.	'89.11.18	PULLY	----

DUPLICATE	SIMILAR PARTS		APPROVAL	SCALE	SIZE		PART NO.
				1:2	4	1/1	92-4-427887 0 △2

KOMATSU 原図↑ORIGINAL ICAD KES A4-3 9 9 0 3