| Yamatake Corporation | 製品仕様書 SPECIFICATIONS |
|---|---|

| CATALOG LISTING | OPERATING MODE | CATALOG LISTING | OPERATING MODE |
|---|---|---|---|
| FL2R-7J6HD-CN※(F) | N. O. | FL2R-7J6SD-CN※(F) | N. O. |
| FL2R-7K6H-CN※(F) | N. C. | FL2R-7K6S-CN※(F) | N. C. |

1. MOUTINNG DIMENNSIONS

FL2R-7※6H(D)-CN※ SERIES

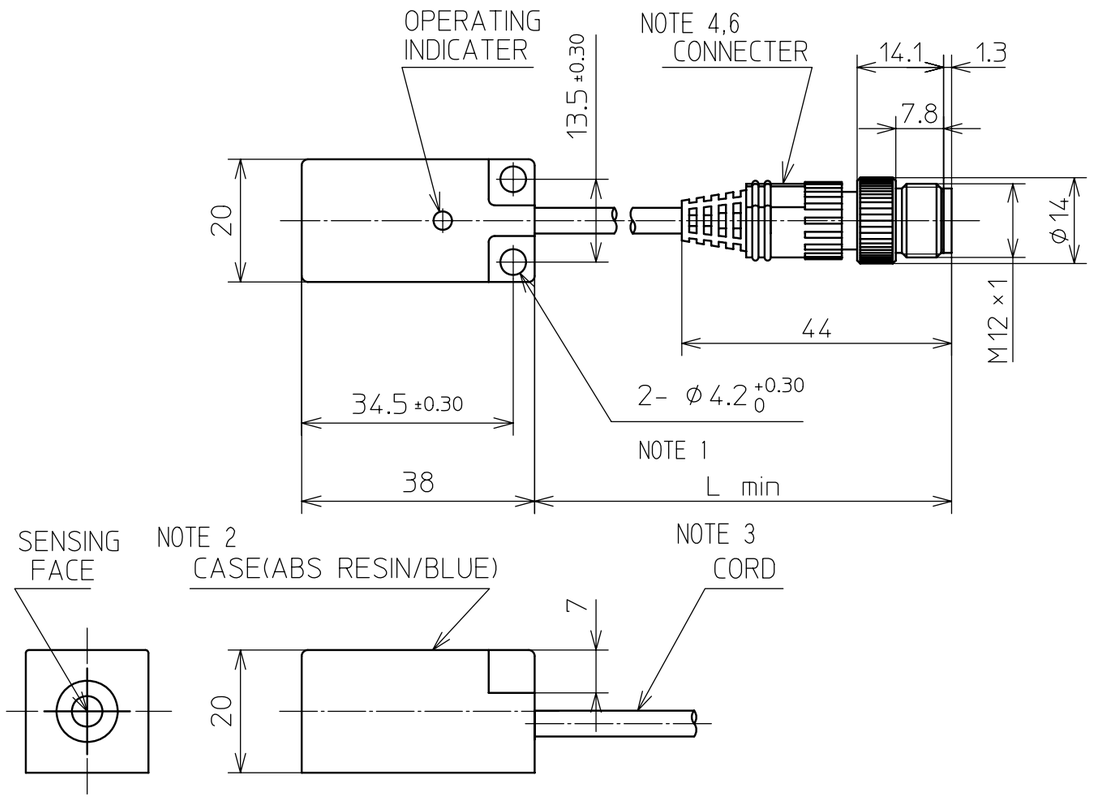


FL2R-7※6S(D)-CN※ SERIES

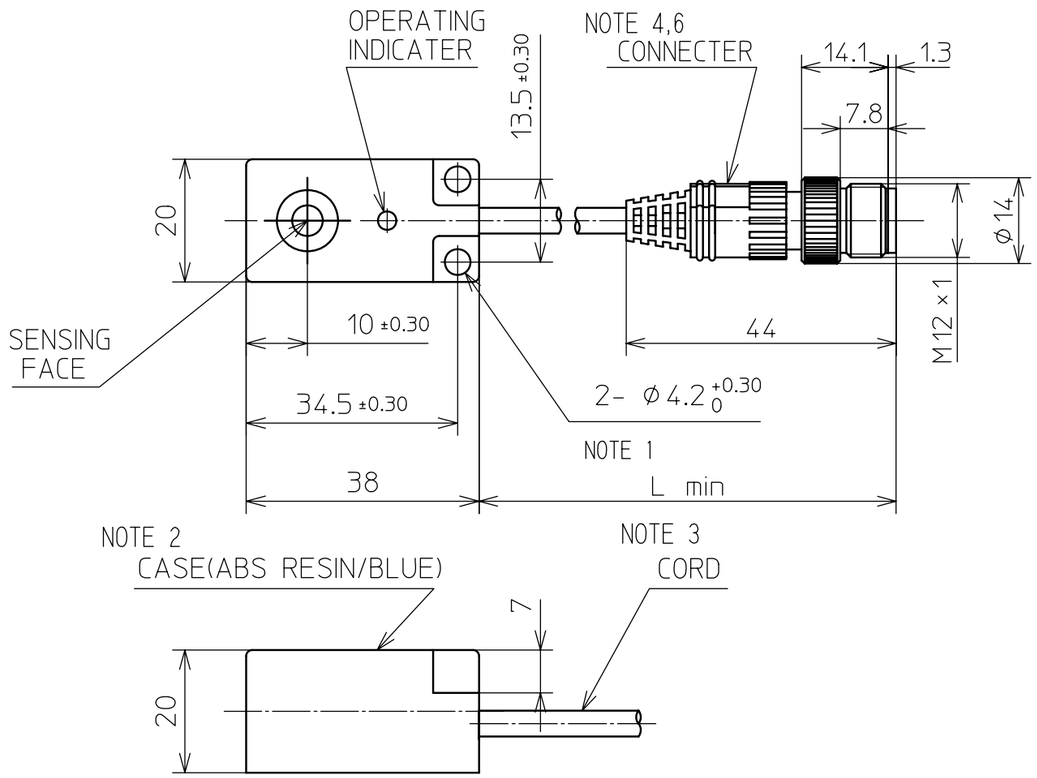


6. SCREW THE COUPRING BY HAND.(0.4 TO 0.6N·m)
5. PLEASE USE THE "PA5" SERIES (DC TYPE) OF OUR VA CONNECTOR.
4. MATERIAL OF CONNECTOR
   HOUSING :POLYESTER ELASTOMER/BLACK
   CONTACT :BRASS, Au PLATED
   COUPRING :BRASS, Ni PLATED
3. CORD :OIL RESISTANCE & VIBRATION RESISTANCE
   DIA. :φ4.2, 0.2mm$^2$
2. THE LETTER "F" AT THE END OF CATALOG LIST INDICATES A DIFFERENT FREQUENCY TYPE OF SWITCH.
   AND THE COLOR OF CASE IS GREEN.

NOTE 1. THE LETTER "CN※"(F) AFTER CATALOG LIST INDICATES LENGTH OF CORD.

| CATALOG LISTING | L min |
|---|---|
| FL2R-7※6※(D)-CN03(F) | 300 |
| FL2R-7※6※(D)-CN05(F) | 500 |
| FL2R-7※6※(D)-CN1(F) | 1000 |

| 改番 REV. | 来歴 RECORD | 日付 DATE | 担当 BY | 検閲 APPD. |
|---|---|---|---|---|
| 03 | ECOP11-0320 | 3-31 '11 | T.O. | S.K. |
| 02 | JE005-2021 | 2-22 '05 | Y.N. | S.K. |
| 01 | JE004-2244 | 1-28 '05 | T.H. | S.S. |

| ≦3 | ≦6 | ≦30 | ≦120 |
|---|---|---|---|
| ±0.2 | ±0.3 | ±0.5 | ±0.8 |

| | | | |
|---|---|---|---|
| 作成DR. Y.Nishizawa 6. 4 '98 | | 尺度SCALE 1:1 | 記入のない公差 TOL. UNLESS NOTED REFER ABOVE TABLE FOR TOL. UNLESS NOTED |
| 検図CHK. S.Suzuki 6. 9 '98 | 形番 MODEL | FL2R-7※6※-CN※ SERIES | |
| 認可APPD S.Nonaka 6. 9 '98 | 名称 NAME | PROXIMITY SWITCH | |
| 日付DATE | 図番 NO. | AD40680E | 改番REV. 03 1/3 |

| 頁 | 改番 |
|---|---|
| 3 | 03 |
| 2 | 03 |

S.P. No.

| SP. No. | |
|---|---|
| | |

**Yamatake Corporation**

# 製品仕様書
# SPECIFICATIONS

## 2. SPECIFICATIONS

| | FL2R-7J6※D-CN※(F) | FL2R-7K6※-CN※(F) |
|---|---|---|
| TYPE | EDDY CURRENT KILLED OSCILLATOR | |
| RATED SUPPLY VOLTAGE | 12V/24VDC | |
| SUPPLY VOLTAGE | 10 TO 30VDC | |
| LEAKAGE CURRENT | 1mA max. | |
| SENSING DISTANCE | 7±0.7 mm | |
| STANDARD TARGET | 25×25mm t1mm (SPCC) | |
| HYSTERESIS | 15% max. OF SENSING DISTANCE | |
| OPERATING MODE | NORMALLY OPEN | NORMALLY CLOSED |
| OUTPUT TYPE | 2-WIRE DC OF TRANSISTOR OUTPUT | |
| OUTPUT | LOAD CURRENT ; 4 TO 100mA<br>VOLTAGE DROP ; 3.3V max. (100mA)<br>OUTPUT WITHSTAND VOLTAGE ; 30V | |
| REPEAT ACCURACY | 0.1mm max. | |
| REPETITION | 1KHz min. | |
| TEMPERATURE DRIFT | ±10% OF SENSING DISTANCE (AT +25℃) BETWEEN -25 TO +70℃ | |
| SUPPLY VOLTAGE DRIFT | ±1% OF SENSING DISTANCE (AT RATED VOLTAGE) BETWEEN RATED VOLTAGE ±15% | |
| OPERATING INDICATOR (SEE Fig.1) | GREEN OR RED 'ON' WITH OUTPUT ON | RED 'ON' WITH STABLE RANGE |
| SETTING RANGE INDICATOR (SEE Fig.1) | GREEN 'ON' WITH STABLE RANGE | |
| OPERATING TEMPERATURE | -25 TO +70℃ | |
| STORAGE TEMPERATURE | -25 TO +70℃ | |
| OPERATING HUMIDITY | 35 TO 95% RH | |
| INSULATION RESISTANCE | 50MΩ min. (AT 500VDC) | |
| DIELECTRIC STRENGTH | 500VAC 50/60Hz 1MINUTE | |
| VIBRATION | 10 TO 55Hz 1.5mm DOUBLE AMPLITUDE 2HOURS IN EACH DIRECTION OF X,Y,Z | |
| SHOCK | 490m/s² 10TIMES IN EACH DIRECTION OF X,Y,Z | |
| SEALING | IP67 (IEC STANDARD) | |
| INSERTION & PULLING FORCE OF CONNECTOR | 0.4 TO 4N (PER PIN) | |
| CYCLE OF INSERTION AND PULL OF CONNECTOR | 50 TIMES min. | |
| MASS | APPROX.60g (WITH CORD 1m) | |
| CIRCUIT PROTECTION | SHORT CURRENT PROTECTION AND WRONG WIRING PROTECTION | |

EMC: APPLIED HARMONIZED STANDARD EN60947-5-2:2007

| | | | |
|---|---|---|---|
| EMC | ELECTRO DISCHARGE | LEVEL 3 8kV (AIR DISCHARGE) | IEC61000-4-2:1995+A1:1998+A2:2000 |
| | RADIATED RF ELECTROMAGNETIC FIELD | LEVEL 2 3V/m | IEC61000-4-3:2006 |
| | ELECTRICAL FAST TRANSIENTS | LEVEL 4 2kV (USING THE CAPACITIVE COUPLING CLAMP) | IEC61000-4-4:2004 |
| | CONDUCTED DISTURBANCES INDUCED BY RF FIELDS | LEVEL 2 3V | IEC61000-4-6:2003+A1:2004+A2:2006 |
| | POWER FREQUENCY MAGNETIC FIELD | LEVEL 4 30A/m | IEC61000-4-8:1993+A1:2000 |

CONTACT LAYOUT

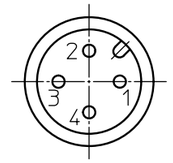


## 3. CONNECTION DIAGRAM

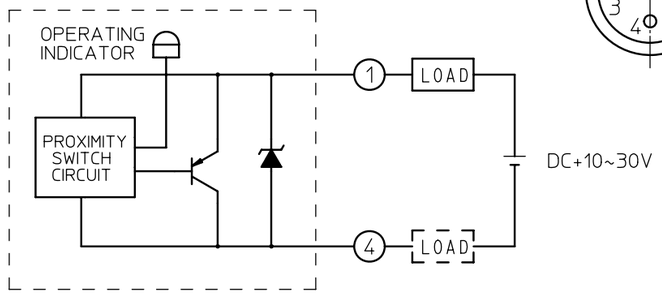


FL2R-7J6※(D)-CN※(F)

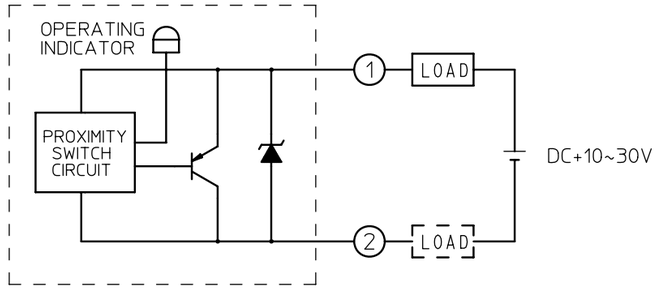


FL2R-7K6※-CN※(F)

LOAD CAN BE CONNECTED TO EITHER OF THE LEAD WIRES.

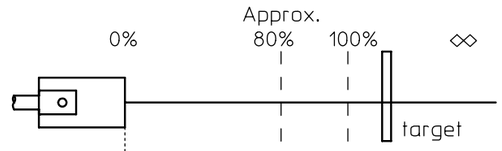


| | | | |
|---|---|---|---|
| N.O. Type | GREEN | RED | OFF |
| N.C. Type | OFF | OFF | RED |

Fig.1 INDICATOR

| 改番 REV. | 来歴 RECORD | : 日付 DATE | 担当 BY | 検閲 APPD. |
|---|---|---|---|---|
| 03 | ～ | | ～ | ～ |
| 02 | ～ | | ～ | ～ |
| 01 | ～ | | ～ | ～ |

| | | | |
|---|---|---|---|
| 作成DR. Y.Nishizawa 6. 4 '98 | | 尺度SCALE | 記入のない公差 TOL. UNLESS NOTED ～ |
| 検図CHK. S.Suzuki 6. 9 '98 | 形 番 MODEL | FL2R-7※6※-CN※ SERIES | |
| 認可APPD S.Nonaka 6. 9 '98 | 名 称 NAME | PROXIMITY SWITCH | |
| 日付DATE | 図 番 NO. | AD40680E | 改番REV. 03 |



| 頁 | 改番 |
|---|---|
| | |

## 4. PRODUCT REVISION CHANGE RECORD

| | DATE | CATALOGUE LISTING | PRODUCT REV. No. | CONTENT OF CHANGE |
|---|---|---|---|---|
| 1 | 3-23 '06 | ALL | 01 | NEW ISSUE |

## 5. PRODUCT REVISION

THE 2-DIGIT PRODUCT REVISION NUMBER IS SHOWN
AFTER THE CATALOGUE LISTING ON THE CASE.

EX.: FL2R-7J6HD-CN03 (1) 01 (2)

(1) CATALOGUE LISTING
(2) PRODUCT REVISION NUMBER

| CATALOGUE LISTING | PRODUCT REV. No. |
|---|---|
| FL2R-7J6HD-CN*(F) | 01 |
| FL2R-7K6H-CN*(F) | 01 |
| FL2R-7J6SD-CN*(F) | 01 |
| FL2R-7K6S-CN*(F) | 01 |

## Terms and Conditions

We would like to express our appreciation for your purchase and use of Yamatake products.
You are required to acknowledge and agree upon the following terms and conditions for your purchase of Yamatake products (field instruments, control valves, and control products), unless otherwise stated in any separate document, including, without limitation, estimation sheets, written agreements, catalogs, specifications and instruction manuals.

### 1 Warranty period and warranty scope

#### 1.1 Warranty period

Yamatake products shall be warranted for one (1) year from the date of your purchase of the said products or the delivery of the said products to a place designated by you.

#### 1.2 Warranty scope

In the event that Yamatake product has any failure attributable to Yamatake during the aforementioned warranty period,
Yamatake shall, without charge, deliver a replacement for the said product to the place where you purchased, or repair the said product and deliver it to the aforementioned place.
Notwithstanding the foregoing, any failure falling under one of the following shall not be covered under this warranty:

(1) Failure caused by your improper use of Yamatake product
(noncompliance with conditions, environment of use, precautions, etc. set forth in catalogs, specifications, instruction manuals, etc.);
(2) Failure caused for other reasons than Yamatake product;
(3) Failure caused by any modification or repair made by any person other than Yamatake or Yamatake's subcontractors;
(4) Failure caused by your use of Yamatake product in a manner not conforming to the intended usage of that product;
(5) Failure that the state-of-the-art at the time of Yamatake's shipment did not allow Yamatake to predict; or
(6) Failure that arose from any reason not attributable to Yamatake, including, without limitation, acts of God, disasters, and actions taken by a third party.

Please note that the term "warranty" as used herein refers to equipment-only-warranty, and Yamatake shall not be liable for any damages, including direct, indirect, special, incidental or consequential damages in connection with or arising out of Yamatake products.

### 2 Ascertainment of suitability

You are required to ascertain the suitability of Yamatake product in case of your use of the same with your machinery, equipment, etc. (hereinafter referred to as "Equipment") on your own responsibility, taking the following matters into consideration:

(1) Regulations and standards or laws that your Equipment is to comply with.
(2) Examples of application described in any documents provided by Yamatake are for your reference purpose only, and you are required to check the functions and safety of your Equipment prior to your use.
(3) Measures to be taken to secure the required level of the reliability and safety of your Equipment in your use
Although Yamatake is constantly making efforts to improve the quality and reliability of Yamatake products, there exists a possibility that parts and machinery may break down.
You are required to provide your Equipment with fool-proof design, fail-safe design, anti-flame propagation design, safety design, or the like so that the said Equipment may satisfy the level of the reliability and safety required in your use, whereby preventing any occurrence of physical injuries, fires, significant damage, and so forth.

### 3 Precautions and restrictions on application

Yamatake products other than those explicitly specified as applicable (e.g. Yamatake Limit Switch For Nuclear Energy) shall not be used in a nuclear energy controlled area (radiation controlled area).
Any Yamatake products shall not be used for / with medical equipment.
In addition,
you are required to conduct a consultation with our sales representative and understand detail specifications, cautions for operation, and so forth by reference to catalogs, specifications, instruction manual, etc. in case that you intend to use Yamatake product for any purposes specified in (1) through (6) below.
Moreover, you are required to provide your Equipment with fool-proof design, fail-safe design, anti-flame propagation design and other designs of protection / safety circuit on your own responsibility to ensure the reliability and safety, whereby preventing problems caused by failure or nonconformity.

(1) For use under such conditions or in such environments as not stated in technical documents, including catalogs, specification, and instruction manuals
(2) For use of specific purposes, such as:
- ＊Nuclear energy / radiation related facilities
  - [For use outside nuclear energy controlled areas]
  - [For use of Yamatake Limit Switch For Nuclear Energy]
- ＊Machinery or equipment for space / sea bottom
- ＊Transportation equipment
  - [Railway, aircraft, vessels, vehicle equipment, etc.]
- ＊Antidisaster / crime-prevention equipment
- ＊Burning appliances
- ＊Electrothermal equipment
- ＊Amusement facilities

(3) Supply systems such as electricity/gas/water supply systems, large-scale communication systems, and traffic/air traffic control systems requiring high reliability
(4) Facilities that are to comply with regulations of governmental/public agencies or specific industries
(5) Machinery or equipment that may affect human lives, human bodies or properties
(6) Other machinery or equipment equivalent to those set forth in items (1) to (5) above which require high reliability and safety

**4 Precautions against long-term use**

Use of Yamatake products, including switches, which contain electronic components, over a prolonged period may degrade insulation or increase contact-resistance and may result in heat generation or any other similar problem causing such product or switch to develop safety hazards such as smoking, ignition, and electrification.

Although acceleration of the above situation varies depending on the conditions or environment of use of the products, you are required not to use any Yamatake products for a period exceeding ten (10) years unless otherwise stated in specifications or instruction manuals.

**5 Recommendation for renewal**

Mechanical components, such as relays and switches, used for Yamatake products will reach the end of their life due to wear by repetitious open/close operations.

In addition, electronic components such as electrolytic capacitors will reach the end of their life due to aged deterioration based on the conditions or environment in which such electronic components are used.

Although acceleration of the above situation varies depending on the conditions or environment of use, the number of open/close operations of relays, etc. as prescribed in specifications or instruction manuals, or depending on the design margin of your machine or equipment, you are required to renew any Yamatake products every 5 to 10 years unless otherwise specified in specifications or instruction manuals.

Field instruments (sensors such as pressure/flow/level sensors, regulating valves, etc.) will reach the end of their life due to aged deterioration of parts.

For those parts that will reach the end of their life due to aged deterioration, recommended replacement cycles are prescribed. You are required to replace parts based on such recommended replacement cycles.

**6 Other precautions**

Prior to your use of Yamatake products, you are required to understand and comply with specifications (e.g., conditions and environment of use), precautions, warnings/cautions/notices as set forth in the technical documents prepared for individual Yamatake products, such as catalogs, specifications, and instruction manuals to ensure the quality, reliability, and safety of those products.

**7 Changes to specifications**

Please note that the descriptions contained in any documents provided by Yamatake are subject to change without notice for improvement or for any other reason.

For inquires or information on specifications as you may need to check, please contact our branch offices or sales offices, or your local sales agents.

**8 Discontinuance of the supply of products/parts**

Please note that the production of any Yamatake product may be discontinued without notice.

For repairable products, we will, in principle, undertake repairs for five (5) years after the discontinuance of those products. In some cases, however, we cannot undertake such repairs for reasons, such as the absence of repair parts.

For field instruments, we may not be able to undertake parts replacement for similar reasons.

**9 Scope of services**

Prices of Yamatake products do not include any charges for services such as engineer dispatch service. Accordingly, a separate fee will be charged in any of the following cases:

(1) Installation, adjustment, guidance, and attendance at a test run
(2) Maintenance, inspection, adjustment, and repair
(3) Technical guidance and technical education
(4) Special test or special inspection of a product under the conditions specified by you

Please note that we cannot provide any services as set forth above in a nuclear energy controlled area (radiation controlled area) or at a place where the level of exposure to radiation is equivalent to that in a nuclear energy controlled area.