Bonfiglioli
Riduttori

serie C-A-F-S

Stirnradgetriebe serie C

Kegelradgetriebe serie A

Aufsteckgetriebe serie F

Stirnradgetriebe-einstufig serie S

IE2-IE3

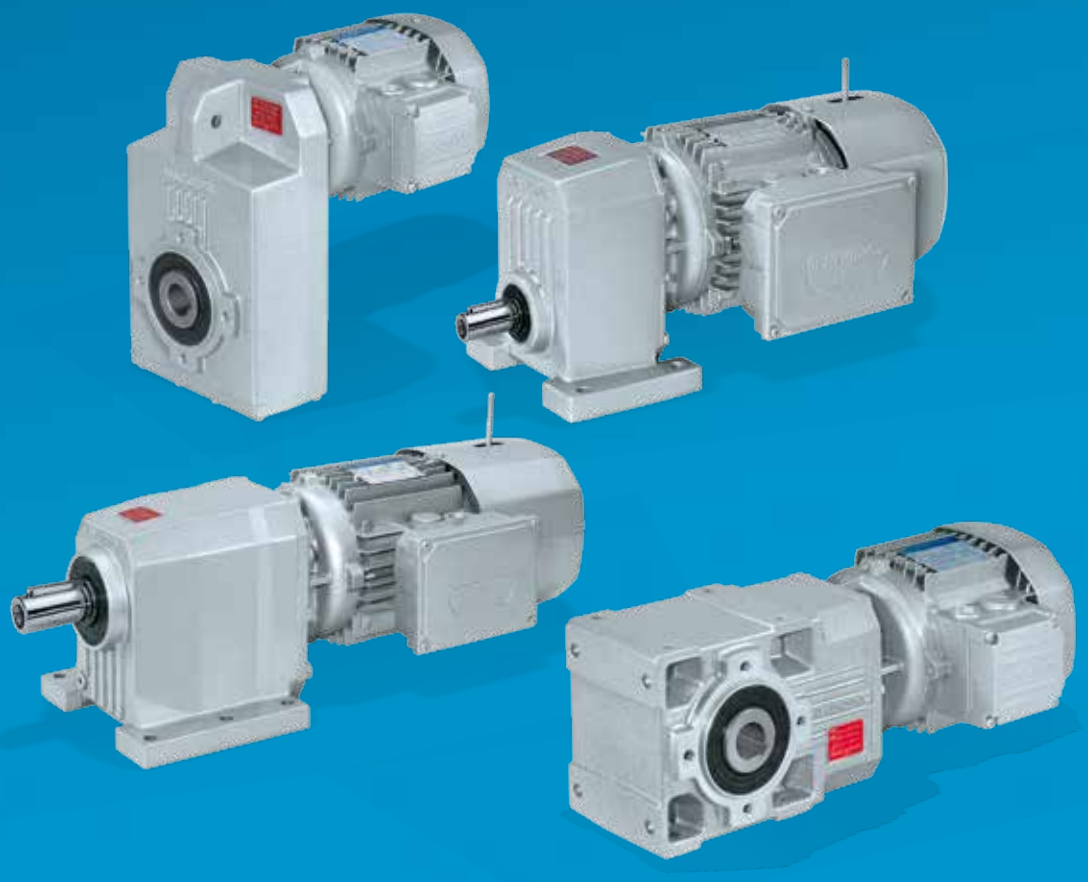

Bonfiglioli
Forever Forward

Änderungen

Das Revisionsverzeichnis des Katalogs wird auf Seite 572 wiedergegeben.

Auf unserer Website www.bonfiglioli.com werden die Kataloge in ihrer letzten, überarbeiteten Version angeboten.

ALLGEMEINEINFORMATIONEN

1 SYMBOLE UND MAßEINHEITEN

Symbole	Meßeinh.	Beschreibung
$A_{N\ 1,2}$	[N]	Nenn-Axialbelastung
f_s	–	Betriebsfaktor
f_T	–	Temperaturfaktor
f_{TP}	–	Wärmefaktor
i	–	Übersetzung
I	–	Relative Einschaltdauer
J_C	[Kgm^2]	Massenträgheitsmoment der externen Massen
J_M	[Kgm^2]	Motorträgheitsmoment
J_R	[Kgm^2]	Getriebeträgheitsmoment
K	–	Massenbeschleunigungs-faktor
K_r	–	Belastungsfaktor der Radiallast
$M_{1,2}$	[Nm]	Drehmoment
$M_{c\ 1,2}$	[Nm]	Berechnetes Drehmoment
$M_{n\ 1,2}$	[Nm]	Nennmoment
$M_{r\ 1,2}$	[Nm]	Benötigtes Drehmoment

Symbole	Meßeinh.	Beschreibung
$n_{1,2}$	[min^{-1}]	Abtriebsdrehzahl
$P_{1,2}$	[kW]	Leistung
$P_{N\ 1,2}$	[kW]	Nennleistung
$P_{R\ 1,2}$	[kW]	Benötigte Leistung
$R_{C\ 1,2}$	[N]	Berechnete Axialbelastung
$R_{N\ 1,2}$	[N]	Zulässige Radialbelastung
S	–	Sicherheitsfaktor
t_a	[°C]	Umgebungstemperatur
t_f	[min]	Betriebszeit während nen-nbetrieb
t_r	[min]	Stillstandszeit
η_d	–	Dynamischer Wirkungs-grad
η_s	–	Statischer Wirkungsgrad
φ	[′]	Winkelspiel an Abtrieb-swelle (bei blockierter Antriebswelle)

$_1$ Werte beziehen sich auf die Antriebswelle

$_2$ Werte beziehen sich auf die Abtriebswelle

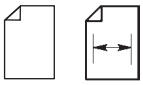	Das Symbol Kennzeichnet die Seite, auf die die Information gefunden werden kantn.
	Dieses Symbol gibt die Winkelbezugswerte für die Angabe der Richtung der Radialkräfte an (Stirnansicht der Welle).
	Symbol für das Gewicht der Getriebe und der Getriebemotoren. Die in der Getriebemotoren-Tabelle genannten Werte schließen das Gewicht des vierpoligen Motors und die eingefüllte Schmierstoffmenge ein, sofern von BONFIGLIOLI RIDUTTORI vorgesehen.

	GEFAHR - ACHTUNG Deutet auf gravierende Gefahrensituationen hin, die bei unvorsichtigem Handeln die Ge- sundheit und die Sicherheit des Personals großer Gefahr aussetzen können.
	WICHTIG Deutet auf besonders wichtige technische Informationen hin, die nicht unbeachtet bleiben sollten.
	Beziehen sich auf Geräte, die der „ATEX“-Richtlinie entsprechen

Serie C	Serie A	Serie F	Serie S	
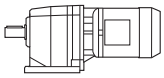	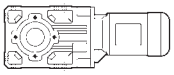	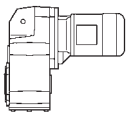	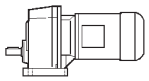	Getriebemotor mit Kompaktmotor.
		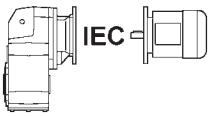	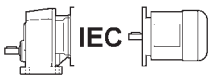	Getriebemotor mit IEC-Motor.
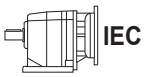	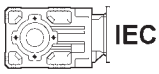	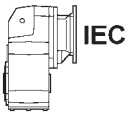		Getriebe vorbereitet für IEC-motor.
		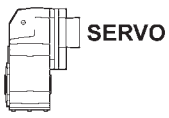		Getriebe vorbereitet für Servomotor.
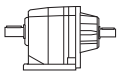	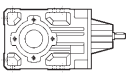	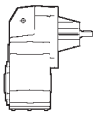	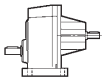	Getriebe mit cylindrischer Antriebswelle.

2 ABTRIEBSMOMENT

2.1 Nenn-Drehmoment M_{n2} [Nm]

Dies ist das an der Abtriebswelle übertragbare Drehmoment bei gleichförmiger Dauerbelastung bezogen auf die Antriebsdrehzahl n_1 und die entsprechende Abtriebsdrehzahl n_2.
Das Drehmoment wird auf Grundlage eines Betriebsfaktor f_s = 1 berechnet.

2.2 Verlangtes Drehmont M_{r2} [Nm]

Dies ist das von der Anwendung verlangte Drehmoment, das stets kleiner oder gleich dem Nenn-Abtriebsmoment M_{n2} des gewählten Getriebes sein muß.

2.3 Soll-Drehmoment M_{c2} [Nm]

Dies ist das bei der Wahl des Getriebes zugrundezulegende Drehmoment, wobei das übertragene Drehmoment M_{r2} und der Betriebsfaktor fs zu berücksichtigen sind; das Soll-Drehmoment wird mit folgender Gleichung berechnet:

$$M_{c2} = M_{r2} \cdot f_s < M_{n2} \qquad (1)$$

3 LEISTUNG

3.1 Leistung Antriebswelle P_{n1} [kW]

In den Tabellen für die Wahl der Getriebe ist die an der Antriebswelle übertragbare Leistung auf die Drehzahl n_1 bezogen und es wurde ein Betriebsfaktor f_s = 1 angenommen.

4 THERMISCHE GRENZ- LEISTUNG P_t [kW]

P_t steht für den Wert der Wärmegrenzleistung des Getriebes und gibt die im Dauerbetrieb und bei einer Umgebungstemperatur t_a = 20 °C übertragbare Leistung an, ohne daß sich daraus Schäden an den Getriebebauteilen oder ein Verfall des Schmiermittels ergeben. Siehe Tab. (A1). Bei einem Aussetzbetrieb oder bei abweichender Umgebungstemperatur von 20°C muß der Wert P_t über den Faktor f_t korrigiert werden, der in der Tabelle (A2) aufgeführt wird bzw. $P_t' = P_t \times f_t$

Bei Getrieben mit mehr als zwei Untersetzungsstufen und/oder einer Untersetzung von i > 45 ist die Kontrolle der thermischen Leistung nicht erforderlich, da sie sicher oberhalb der mechanisch übertragbaren Leistung liegt.

(A 1)

P_t [kW] 20 °C		
	n_1 = 1400 min^{-1}	n_1 = 2800 min^{-1}
C 05 2	—	—
C 12 2	—	—
C 22 2	—	—
C 32 2	—	4.5
C 36 2	6.5	5.0
C 41 2	8.0	6.0
C 51 2	11.0	7.8
C 61 2	14.0	10.0
C 70 2	21	16.0
C 80 2	32	24
C 90 2	43	32
C 100 2	59	42

P_t [kW] 20 °C		
	n_1 = 1400 min^{-1}	n_1 = 2800 min^{-1}
A 05 2	3.2	2.4
A 10 2	4.8	4.0
A 20 2	6.0	5.4
A 30 2	8.0	6.6
A 35 2	9.5	8.2
A 41 2	11.5	9.6
A 50 2	20	18.0
A 55 2	21	18.0
A 60 2	27	23
A 70 3	31	26
A 80 3	44	39
A 90 3	64	57

P_t [kW] 20 °C		
	n_1 = 1400 min^{-1}	n_1 = 2800 min^{-1}
F 10 2	3.8	2.7
F 20 2	9.1	6.5
F 25 2	10.2	7.4
F 31 2	11.7	8.5
F 41 2	14.3	10.4
F 51 2	21.5	15.0
F 60 3	26.0	18.9
F 70 3	36.4	26.0
F 80 3	52	36
F 90 3	75	53

P_t [kW] 20 °C		
	n_1 = 1400 min^{-1}	n_1 = 2800 min^{-1}
S 10 1	5.5	4.9
S 20 1	7.8	7.2
S 30 1	10.0	9.1
S 40 1	15.6	14.3
S 50 1	21	18.9

(A 2)

f_t					
t_a [°C]	Dauerbetrieb	Aussetzbetrieb			
		Relative Einschaltdauer [I]			
		80%	**60%**	**40%**	**20%**
40	0.80	1.1	1.3	1.5	1.6
30	0.85	1.3	1.5	1.6	1.8
20	1.0	1.5	1.6	1.8	2.0
10	1.15	1.6	1.8	2.0	2.3

Wobei die Einschaltdauer (I)% durch das Verhältnis zwischen Betriebszeit unter Last t_f und der Gesamtbetriebszeit ($t_f + t_r$), angegeben in Prozent, gegeben ist.

$$I = \frac{t_f}{t_f + t_r} \cdot 100 \qquad (2)$$

Die durchzuführende Kontrolle ist:

$$P_{r1} \leq P_t \ x \ f_t \qquad (3)$$

5 WIRKUNGSGRAD

5.1 Dynamischer Wirkungsgrad η_d

Er ist gegeben durch das Verhältnis der Abtriebsleistung P_2 zur Antriebsleistung P_1:

$$\eta_d = \frac{P_2}{P_1} \cdot 100 \qquad [\%] \qquad (4)$$

(A 3)

	2 x	**3 x**	**4 x**
η_d	95%	93%	90%

	2 x	**3 x**	**4 x**
η_d	94%	91%	89%

	2 x	**3 x**	**4 x**
η_d	95%	93%	90%

	1 x
η_d	98%

6 GETRIEBEÜBERSETZUNG i

Die Übersetzung des Getriebes wird mit dem Buchstaben [i] bezeichnet und ist folgendermaßen definiert:

$$i = \frac{n_1}{n_2} \qquad (5)$$

In diesem Katalog wird die Übersetzung mit einer Stelle hinter dem Komma angegeben, bei Übersetzungen > 1000 ohne Dezimalstelle.
Wenn genaue Angaben zur Übersetzung benötigt werden, Siehe Kapitel „EXAKTE ÜBERSETZUNG“.

7 DREHZAHL

7.1 Drehzahl Antriebswelle n_1 [min^{-1}]

Dies ist die vom gewählten Motortyp abhängige Drehzahl.
Die Katalogangaben beziehen sich auf die Drehzahl von allgemeinüblichen eintourigen Elektromotoren oder von polumschatbaren Elektromotoren.
Um optimale Betriebsbedingungen zu gewährleisten, ist stets eine Antriebsdrehzahl unter 1400 min^{-1} zu empfehlen.
Höhere Antriebsdrehzahlen sind zulässig, wobei die zwangsläufige Herabsetzung des Nenn-Abtriebsdrehmoments M_{n2} des Getriebes zu berücksichtigen ist.

7.2 Abtriebsdrehzahl n_2 [min^{-1}]

Sie ist abhängig von der Antriebsdrehzahl n_1 und dem Übersetzungs i nach folgender Gleichung:

$$n_2 = \frac{n_1}{i} \qquad (6)$$

8 TRÄGHEITSMOMENT J_r [Kgm^2]

Die im Katalog angegebenen Trägheitsmomente sind auf die Antriebswelle des Getriebes bezogen und daher im Falle einer direkten Verbindung schon zur Motordrehzahl in Beziehung gesetzt.

9 BETRIEBSFAKTOR f_s

Beim Betriebsfaktor handelt es sich um den Parameter, der die Betriebsbelastung, die das Getriebe aushalten muss, in einem Wert ausdrückt. Dabei berücksichtigt er, auch wenn nur mit einer unvermeidbaren Annäherung, den täglichen Einsatz, die unterschiedlichen Belastungen und eventuelle Überbelastungen, die mit der spezifischen Applikation des Getriebes verbunden sind.
Der nachstehenden Grafik (A4) kann, nach der Wahl der entsprechenden Spalte mit der Angabe der täglichen Betriebsstunden der Betriebsfaktor entnommen werden, indem man die Schnittstelle zwischen der stündlichen Schaltungen und einer der Kurven K1, K2 und K3 sucht.
Die mit K_ gekennzeichneten Kurven sind über den Beschleunigungsfaktor der Massen K an die Betriebsart gekoppelt (annähernd: gleichmäßige, mittlere oder starke Belastung), der wiederum an das Verhältnis zwischen Trägheitsmoment der angetriebenen Massen und dem des Motors gebunden ist. Unabhängig von dem so erhaltenen Betriebsfaktor, möchten wir Sie darauf hinweisen, dass es Applikationen gibt, unter denen beispielsweise auch die Hebefunktionen zu finden sind, bei denen das Nachgeben eines Getriebeorgans, das in dessen Nähe arbeitende Personal einer Verletzungsgefahr aussetzen könnte. Sollten daher Zweifel darüber bestehen, ob die entsprechende Applikation sich in diesem Bezug als kritisch erweist, bitten wir Sie sich zuvor mit unseren Technischen Kundendienst in Verbindung zu setzen.

(A 4)

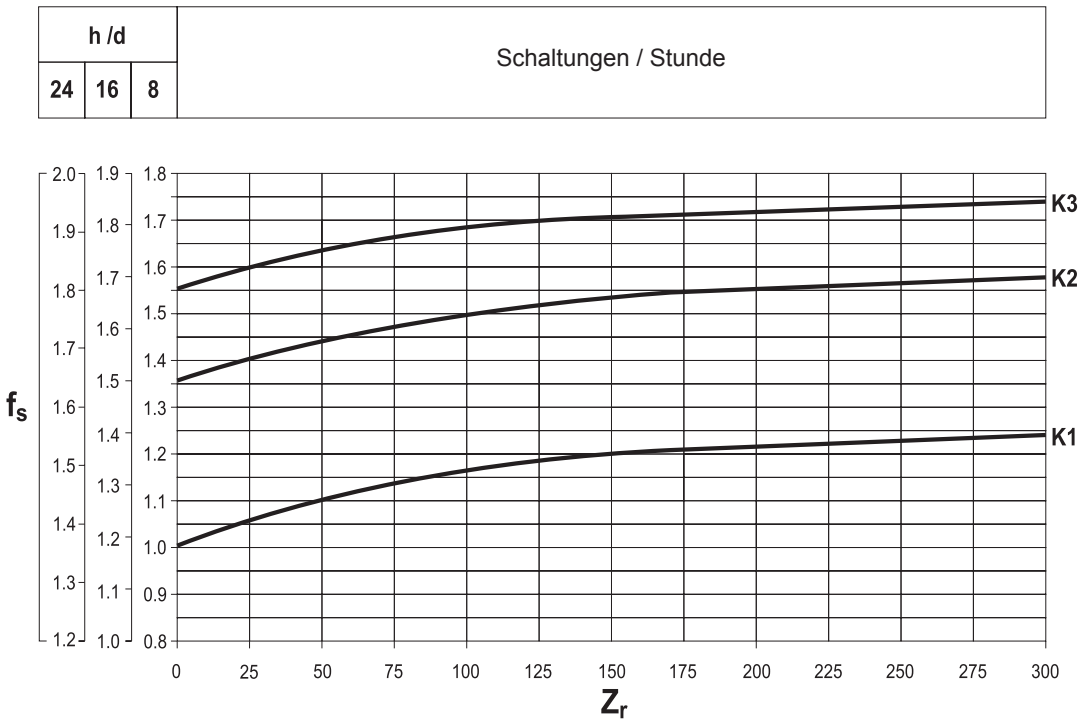

9.1 Beschleunigungsfaktor der Massen K

Dieser Parameter dient der Wahl der Kurve, die sich auf die jeweilige Belastungsart bezieht. Der Wert ergibt sich aus folgender Formel:

(A 5)

$$K = \frac{J_c}{J_m}$$

→ J_c = Trägheitsmoment der angetriebenen Massen, bezogen auf die Motorwelle

J_m = Trägheitsmoment des Motors

K ≤ 0,25	→ **K1**	Gleichmäßige Belastung
0,25 < K ≤ 3	→ **K2**	Belastung mit mäßigen Stößen
3 < K ≤ 10	→ **K3**	Belastung mit starken Stößen
K > 10	→	Bitten wir Sie, sich mit unseren Technischen Kundendienst in Verbindung zu setzen

10 WARTUNG

Die mit Dauerschmierung gelieferten Getriebe benötigen einen periodischen Ölwechsel.
Bei den übrigen Getrieben wird ein erster Ölwechsel nach ca. 300 Betriebsstunden empfohlen, wobei das Innere der Gruppe sorgfältig mit einem geeigneten Reinigungsmittel zu waschen ist.
Mineralöle nicht mit Synthetikölen mischen.
Den Ölstand regelmäßig kontrollieren. Die Ölwechsel in den in der Tabelle (A6) angegebenen Fristen durchführen.

(A 6)

Öltemperatur [°C]	Schmierfrist [h]	
	Mineralöl	Syntheseöl
< 65	8000	25000
65 - 80	4000	15000
80 - 95	2000	12500

11 ANTRIEBSAUSWAHL

Um die Getriebe und Getriebemotoren richtig auswählen zu können, muß man über einige grundlegende Daten verfügen, die wir in der Tabelle (A7) zusammengefaßt haben.
Eine Kopie dieser vom Kunden ausgefüllten Tabelle kann an unseren Technischen Kundendienst geschickt werden, der dann die für die gewünschte Anwendung geeignete Auslegung wählt.

(A 7)

	Anwendung	
P_{r2}	Abtriebsleistung bei n_2 max	.....kW
P_{r2}'	Abtriebsleistung bei n_2 min	.....kW
M_{r2}	Puissance en sortie à n_2 min	.....Nm
n_2	Abtriebsdrehzahl max	.....min^{-1}
n_2'	Abtriebsdrehzahl min	.....min^{-1}
n_1	Antriebsdrehzahl max	.....min^{-1}
n_1'	Antriebsdrehzahl min	.....min^{-1}
R_{c2}	Radialkraft auf Abtriebswelle	.....N
x_2	Abstand des Kraftangriffspunktes (*)	.....mm
	Orientierung der Last am Abtrieb	..... 
	Drehrichtung der Abtriebswelle (U-GU) (**)	.....
R_{c1}	Radialkraft auf Antriebswelle	.....N
x_1	Abstand des Kraftangriffspunktes (*)	.....mm
	Orientierung der Last am Antrieb	..... 
	Drehrichtung der Antriebswelle (U-GU) (**)	.....
A_{c2}	Axialkraft auf Abtriebswelle (+/–)(***)	.....N

A_{c1}	Axialkraft auf Antriebswelle (+/–)(***)	.....N
J_c	Trägheitsmoment der Last	.....Kgm^2
t_a	Umgebungstemperatur	.....C°
	Höhe ü.d.M.	.....m
	Relative Einschaltdauer gemäß CEI	S...../.....%
Z	Schaltungshäufigkeit	.....1/h
	Nennspannung des Motors	V
	Nennspannung der Bremse	V
	Frequenz	.....Hz
M_b	Bremsmoment	.....Nm
	Schutzart des Motors	IP.....
	Isolierstoffklasse	.....

(*) Der Abstand x_{1-2} ist der Abstand vom Kraftangriffspunkt zum Wellenansatz (wenn nicht anders angegeben, wird davon ausgegangen, daß die Kraft auf der Mitte des Wellenendes angreift).

(**) U = Uhrzeigersinn;
GU = Gegenuhrzeigersinn

(***) + = Druck
– = Zug

Für die Auswahl von Getrieben in ATEX Ausführung, siehe Kapitel Seite 312

11.1 Wahl des Getriebemotors

a) Den Betriebsfaktor f_s in Abhängigkeit von der Belastungsart (Faktor K), den Schaltungen /Stunde Z_r und den Betriebs stunden bestimmen.

b) Aus dem Drehmoment M_{r2} mit Hilfe der bekannten Werte für n_2 und dem dynamischen Wirkungsgrad η_d die Antriebsleistung ableiten.

$$P_{r1} = \frac{M_{r2} \cdot n_2}{9550 \cdot \eta_d} \text{ [kW]} \qquad (7)$$

Für das gewählte Getriebe kann der Wert η_d aus Abschnitt 5 ermittelt werden.

c) Unter den Tabellen mit den Technischen Daten der Getriebemotoren die Tabelle auswählen, die folgender Leistung entspricht:

$$P_n \geq P_{r1} \qquad (8)$$

Wenn nicht anders angegeben, bezieht sich die im Katalog angegebene Leistung P_n der Motoren auf Dauerbetrieb S1. Bei Motoren, die unter anderen Bedingungen als S1 eingesetzt werden, muß die vorgesehen Betriebsart unter Bezug auf die CEI-Normen 2-3/IEC 34-1 bestimmt werden.
Insbesondere kann man für die Betriebsarten S2 bis S8 (und für Motorbaugrößen gleich oder niedriger als 132) eine Überdimensionierung der Leistung relativ zu der für den Dauerbetrieb vorgesehenen Leistung erhalten; die zu erfüllende Bedingung ist dann:

$$P_n \geq \frac{P_{r1}}{f_m} \qquad (9)$$

Der Überdimensionierungsfaktor f_m kann der Tabelle (A8) entnommen werden.

11.2 Relative Einschaltdauer

$$I = \frac{t_f}{t_f + t_r} \cdot 100 \qquad (10)$$

t_f = Betriebszeit mit konstanter Belastung
t_r = Aussetzzeit

(A 8)

	BETRIEB						
	S2			**S3***			**S4 - S8**
	Zyklusdauer [min]			Relative Einschaltdauer (I)			bitte unseren Technischen Kunden-dienst zu Rate ziehen
	10	**30**	**60**	**25%**	**40%**	**60%**	
f_m	1.35	1.15	1.05	1.25	1.15	1.1	

* Die Zyklusdauer muß in jedem Fall kleiner oder gleich 10 min sein; wenn sie darüber liegt, unseren Technischen Kundendienst zu Rate ziehen

Als nächstes wählen Sie anhand der Getriebemotorenauswahltabellen den Abschnitt mit der entsprechenden $\mathbf{P_n}$ und suchen die gewünschte Abtriebsdrehzahl $\mathbf{n_2}$, oder die nächstmögliche Drehzahl, zusammen mit dem Sicherheitsfaktor **S**, der den zutreffenden Betriebsfaktor $\mathbf{f_s}$ erreicht oder überschreitet.

Der Sicherheitsfaktor wird wie folgt berechnet:

$$S = \frac{M_{n2}}{M_2} = \frac{P_{n1}}{P_1} \qquad (11)$$

Standardmäßig stehen Getriebemotorenkombinationen mit 2, 4 und 6 poligen Motoren für eine Frequenz von 50 Hz zur Verfügung. Sollten die Antriebsdrehzahlen abweichend von 2800, 1400 oder 900 min^{-1} sein, dann stützen Sie die Auslegung des Getriebes auf die Getriebenenndaten.

11.3 Wahl des Getriebes und Getriebe für IEC-motoren

a) Den Betriebsfaktor f_s bestimmen.

b) Anhand des bekannten von der Anwendung geforderten Abtriebsdrehmoments M_{r2} das Soll-Drehmoment bestimmen:

$$M_{c2} = M_{r2} \cdot f_s \qquad (12)$$

c) Auf Grundlage der verlangten Abtriebsdrehzahl n_2 und der verfügbaren Antriebsdrehzahl n_1 die Übersetzungs berechnen:

$$i = \frac{n_1}{n_2} \qquad (13)$$

Anhand der Werte für M_{c2} und i in den Tabellen für die Drehzahl n_1 das Getriebe auswählen, das in Abhängigkeit von einer Übersetzung [i], die dem Sollwert möglichst nahe ist, folgendes Nenn-Drehmoment erlaubt:

$$M_{n2} \geq M_{c2} \quad (14)$$

Wenn das Getriebe mit einem Elektromotor verbunden werden soll, die Verträglichkeit anhand der Tabelle der möglichen Anbaumöglichkeiten sicherstellen.

12 PRÜFUNGEN

Nachdem die Auswahl des Getriebe oder Getriebemotor abgeschlossen ist, werden die folgenden Schritte empfohlen:

a) Thermische Grenzleistung
Sicherstellen, daß die Wärmeleistung des Getriebes größer oder gleich der verlangten Leistung ist, die von der Anwendung nach Gleichung (3) auf S. 6 verlangt wird. Andernfalls ein größer dimensioniertes Getriebe wählen bzw. ein Zwangskühlsystem vorsehen.

b) Max. Drehmoment
Im allgemeinen darf das max. Drehmoment (verstanden als momentane Lastspitze), das auf das Getriebe aufgebracht werden kann, 200% des Nenndrehmoments M_{n2} nicht überschreiten. Sicherstellen, daß dieser Grenzwert nicht überschritten wird, und nötigenfalls die entsprechenden Vorrichtungen zur Begrenzung des Drehmoments vorsehen.
Bei polumschaltbaren Drehstrommotoren muss dem Umschaltdrehmoment, das beim Umschalten von der hohen auf die niedrige Drehzahl erzeugt wird, besondere Aufmerksamkeit geschenkt werden, da es entschieden größer sein kann als das Nenn-Drehmoment.
Eine einfache und kostengünstige Methode zum Senken dieses Drehmoments besteht darin, daß nur zwei Phasen des Motors während des Umschaltens gespeist werden (die Dauer der Speisung von nur 2 Phasen kann durch ein Zeitrelais gesteuert werden):

$M_{g2} = 0.5 \cdot M_{g3}$
M_{g2} = Umschaltdrehmoment bei Speisung von 2 Phasen;
M_{g3} = Umschaltdrehmoment bei Speisung von 3 Phasen

Wir empfehlen jedoch in jedem Fall, unseren Technischen Kundendienst zu Rate zu ziehen.

c) Radialkräfte
Sicherstellen, daß die auf die Antriebswellen und/oder Abtriebswellen wirkenden Radialkräfte innerhalb der zulässigen Katalogwerte liegen.
Wenn sie höher sind, das Getriebe größer dimensionieren bzw. die Abstützung der Last verändern.
Wir erinnern daran, daß alle im Katalog angegebenen Werte sich auf Kräfte beziehen, die auf die Mitte des Wellenendes wirken.
Diese Tatsache muß bei der Prüfung unbedingt berücksichtigt werden und nötigenfalls muß mit Hilfe der geeigneten Formeln die zulässige Kraft beim gewünschten Abstand x_{1-2} bestimmt werden. Siehe hierzu die Erläuterungen zu den Radialkräften in diesem Katalog.

d) Axialkräfte
Auch die eventuell vorhandenen Axialkräfte müssen mit den im Katalog angegebenen zulässigen Werten verglichen werden. Wenn sehr hohe Axialkräfte wirken oder Axialkräfte in Kombination mit Radialkräften, bitte unseren Technischen Kundendienst zu Rate ziehen.

e) Schaltungen/Stunde
Bei anderen Betriebsarten als S1 mit einem hohen Wert für die Schaltungen/Stunde muß der Faktor Z berücksichtigt werden (er kann mit Hilfe der Angaben im Kapitel Motoren bestimmt werden), der die max. zulässige Anzahl von Schaltvorgängen für eine bestimmte Anwendung definiert.

13 INSTALLATION

Für die Installation des Getriebes ist es äußerst wichtig, daß folgende Normen beachtet werden:

a) Sicherstellen, daß die Befestigung des Getriebes stabil ist, damit keine Schwingungen entstehen. Wenn es voraussichtlich zu Stößen, längerdauernden Überlasten oder zu Blockierungen kommen kann, sind entsprechende Schutzelemente wie hydraulische Kupplungen, Kupplungen, Rutschkupplungen usw. zu installieren.

b) Beim Lackieren die bearbeiteten Flächen und die Dichtringe schützen, damit der Anstrichstoff nicht den Kunststoff angreift und somit die Dichtigkeit der Ölabdichtungen in Frage gestellt wird.

c) Die Organe, die mit einer Keilverbindung auf der Abtriebswelle des Getriebes befestigt werden, müssen mit einer Toleranz ISO H7 gearbeitet sein, um allzu fest blockierte Verbindungen zu vermeiden, die eventuell zu einer irreparablen Beschädigung des Getriebes während des Einbaus führen könnten. Außerdem sind beim Ein- und Ausbau dieser Organe geeignete Zugstangen und Abzieher zu verwenden, wobei die Gewindebohrung an den Stirnseiten der Wellen zu verwenden ist.

d) Die Berührungsflächen müssen sauber sein und vor der Montage mit einem geeigneten Schutzmittel behandelt werden, um Oxidierung und die daraus folgende Blockierung der Teile zu verhindern.

e) Vor Inbetriebnahme des Getriebes muß man sich vergewissern, daß die das Getriebe beinhaltende Maschine gemäß den aktuellen Regelungen der Maschinen-Richtlinie 2006/42/EG ausgeführt ist.

f) Vor Inbetriebnahme der Maschine sicherstellen, daß die Anordnung der Füllstandschraube der Einbaulage entspricht, und die Viskosität des Schmiermittels den Vorgaben entspricht (finden Sie in der Bedienungsanleitung auf www.bonfiglioli.com).

g) Bei Inbetriebnahme in Freien muß man geeigneten Schutzgeräte vorsehen, um den Antrieb gegen Regen und direkte Sonnenstrahlung zu schützen.

13.1 Zur Montage eines Servomotors wird eine Klemmvorrichtung benötigt (Eingangsadapter Typ SC)

Klemmvorrichtung drehen bis die Markierung mit der Markierung der Eingangswelle übereinstimmt. Wenn die Motorwelle eine Passfeder hat, muss diese entfernt werden und die Passfedernut so gedreht werden, dass sie mit der Markierung der Eingangswelle fluchtet, erst dann kann der Motor montiert werden. Die Nut muss sich auf der gleichen Seite wie die Schraube befinden.
Ziehen Sie die Schrauben, die den Servomotoren halten, an. Stecken Sie einen Drehmomentschlüssel durch die seitliche Bohrung im Flansch und ziehen Sie die Schrauben in der Klemmvorrichtung mit dem für den Adapter vorgeschriebenen Moment (siehe Zeichnung) an.

14 ANBAUANWEISUNGEN

In den in Tabelle (A9) zu sehenden Bildern werden die 3 möglichen Fälle zum Anbau des Getriebes Typ A der zu betreibenden Maschine dargestellt. Für jeden dieser Fälle sind in Tabelle (A10) die Abmessungen der zu verwendenden Sechskantschrauben angegeben. Im übrigen schlagen wir für einen einfachen Anbau vor, den Schlüsseltyp entsprechend Tabelle (A9) zu verwenden.

(A 9)

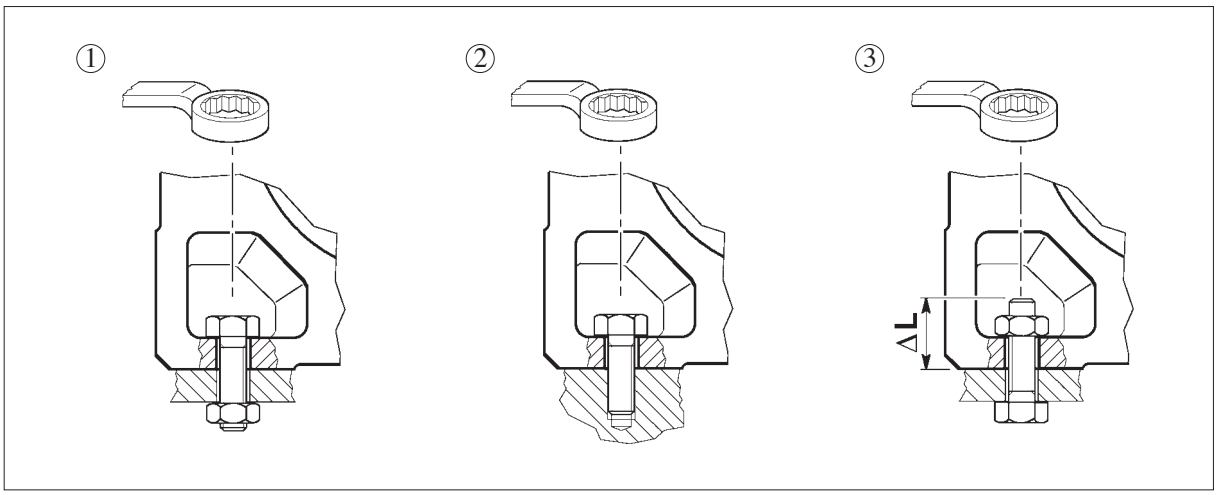

(A 10)

	Schraubentyp			
	①	②	③	ΔL (mm)
A 05	M8x22	M8x20	M8x ...	22
A 10	M8x25	M8x20	M8x …	20
A 20	M8x25	M8x20	M8x …	20
A 30	M10x30	M10x25	M10x …	25
A 35	M10x30	M10x25	M10x ...	25
A 41	M12x35	M12x30	M12x …	30

	Schraubentyp			
	①	②	③	ΔL (mm)
A 50	M14x45	M14x40	M14x …	35
A 55	M14x40	M14x40	M14x ...	35
A 60	M16x50	M16x45	M16x …	40
A 70	M20x60	M20x55	M20x …	45
A 80	M24x70	M24x65	M24x …	55
A 90	M24x90	M24x80	M24x …	65

15 LAGERUNG

Die korrekte Lagerung der Antriebe erfordert folgende Vorkehrungen:

a) Die Produkte nicht im Freien lagern und nicht in Räumen, die der Witterung ausgesetzt sind, oder eine hohe Feuchtigkeit aufweisen.

b) Die Produkte nie direkt auf dem Boden, sondern auf Unterlagen aus Holz oder einem anderen Material lagern.

c) Bei längeren Lager- und Aussetzzeiten müssen die Oberflächen für die Verbindung, wie Flansche, Wellen oder Kupplungen mit einem geeigneten Oxidationsschutzmittel behandelt werden (Mobilarma 248 oder ein äquivalentes Mittel).

Des weiteren müssen die Getriebe mit nach oben gerichteter Entlüftungsschraube gelagert und mit Öl gefüllt werden.
Die Getriebe müssen vor ihrer Verwendung mit der angegeben Menge des vorgesehenen Schmiermittels gefüllt werden.

16 LIEFERBEDINGUNGEN

Die Getriebe werden in folgendem Zustand geliefert:

a) schon bereit für die Montage in der bei Bestellung festgelegten Einbaulage;

b) nach werksinternen Spezifikationen geprüft;

c) die Verbindungsflächen sind nicht lackiert;

d) ausgestattet mit Schrauben und Muttern für die Montage der Motoren (Version mit Adapter für IEC-Motoren);

e) alle Getriebe werden mit Kunststoffschutz auf den Wellen geliefert;

f) mit Transportierring zum Anheben (falls vorgesehen).

17 ANGABEN ZU DEN ANSTRICHSTOFFE

Die Spezifikation des Lackes, der auf den Getrieben (wo erforderlich) verwendet wurde, können bei den Filialen oder Verkaufsstellen, die die Gruppen geliefert haben, angefordert werden.

18 KONSTRUKTIVE EIGENSCHAFTEN

Die wichtigsten konstruktiven Eigenschaften sind:
- Baueinheitensystem
- Kompaktheit
- universelle Montage
- hohe Wirkungsgrade
- niedriger Geräuschpegel
- einsatzgehärtete und gehärtete Zahnräder aus legiertem Stahl
- Nicht lackierten Aluminiumgehäuse bei den Größen 05, 12, 22 und 32; hochwiderstandsfähige und lackierte Gußgehäuse bei den anderen Größen
- Antriebs-und Abtriebswellen aus hochwiderstandsfähigem Stahl.

(B 11)

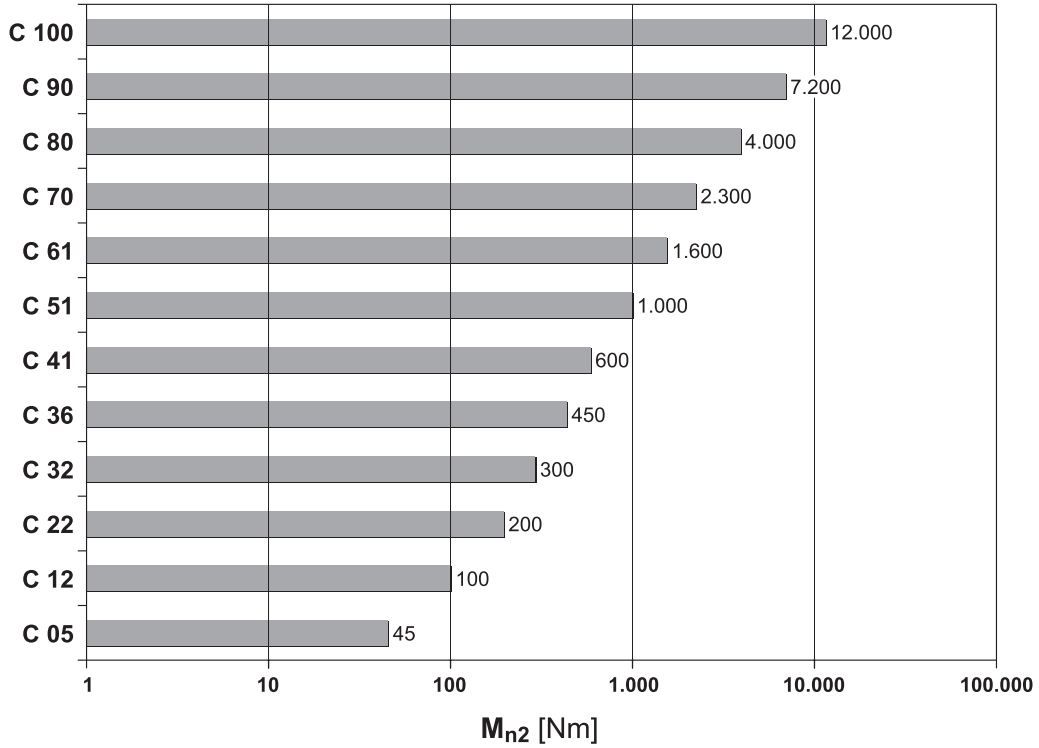

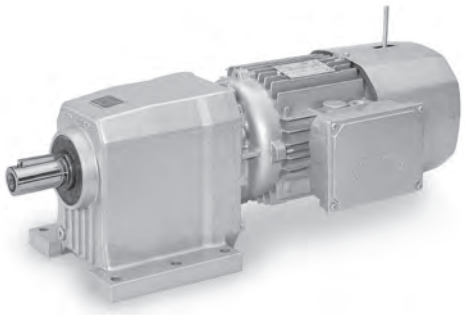

19 BAUFORMEN

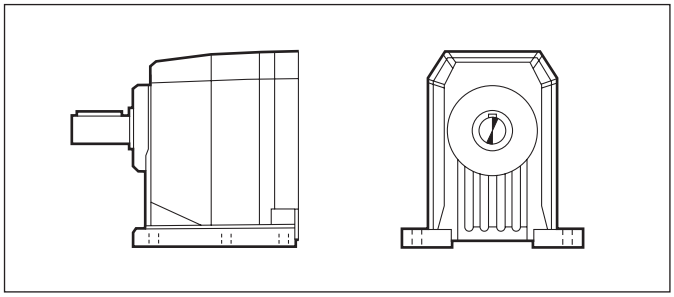

P

Mit integrierten Füßen

C 05 ... C 100

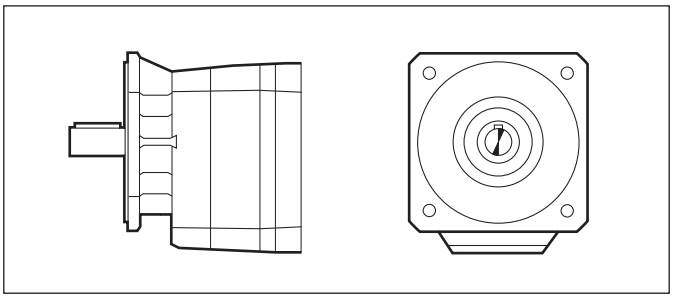

F

Mit integriertem Flansch

C 05 ... C 32
C 70 ... C 100

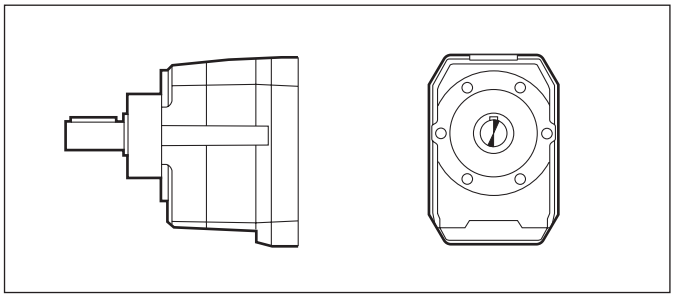

U

Universalgehäuse UNIBOX

C 12 ... C 61

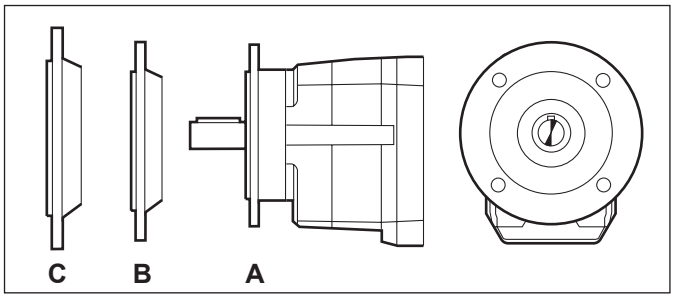

UF

UNIBOX aufgesetztem Flansch

C 12 ... C 61

20 BEZEICHNUNG

GETRIEBE

C 32 2 F 52.4 S1 B5 .....

OPTIONEN

EINBAULAGEN

C...P: **B3** (Standard), B6, B7, B8, V5, V6
C...F/U/UF: **B5** (Standard), B51, B53, B52, V1, V3

BEZEICHNUNG DER ANTRIEBSSEITE

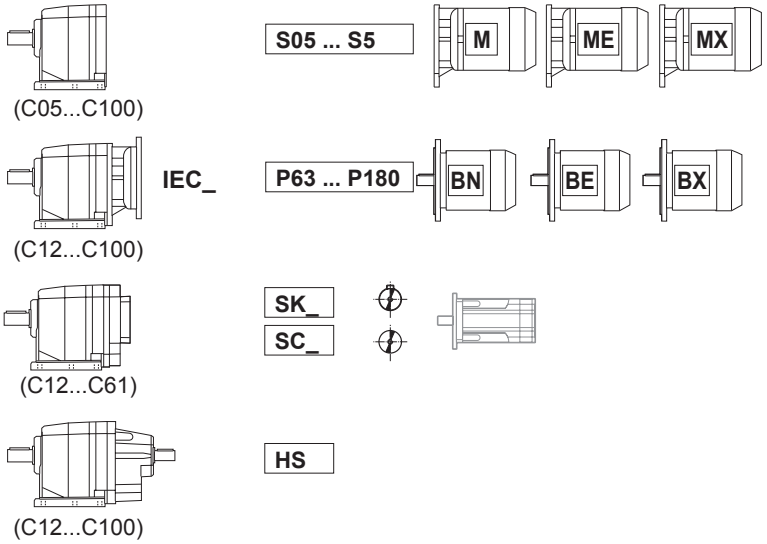

ÜBERSETZUNG

BAUFORM

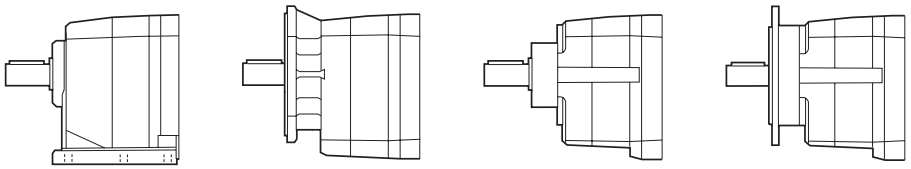

P (C05...C100)

F (C05...C32) (C70...C100)

U (C12...C61)

UFA UFB UFC (C12...C61)

GETRIEBESTUFEN
2, **3**, **4**

GETRIEBEBAUGRÖSSE
05, **12**, **22**, **32**, **36**, **41**, **51**, **61**, **70**, **80**, **90**, **100**

TYP: **C** = Stirnradgetriebe

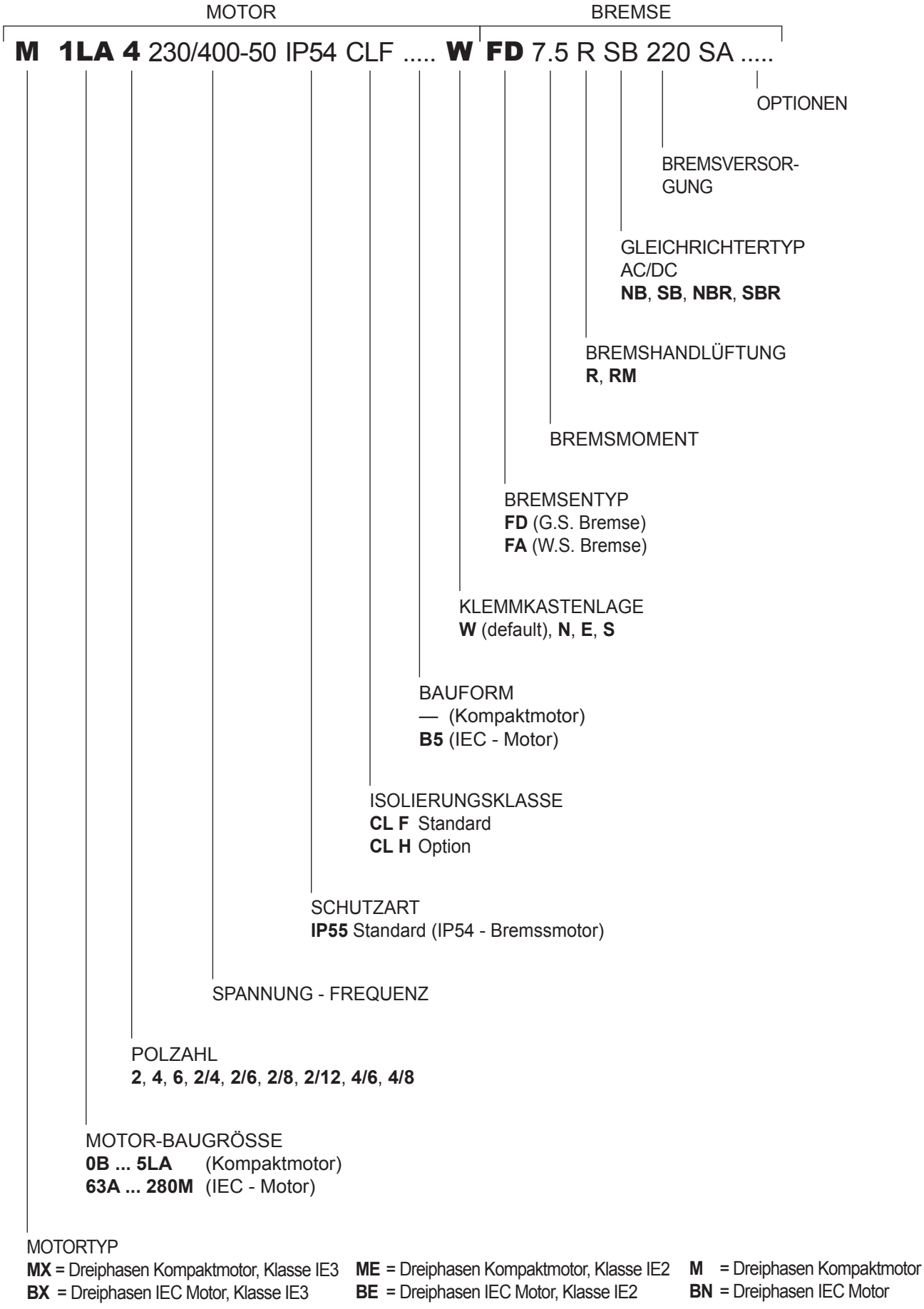
MOTOR
BREMSE
M 1LA 4 230/400-50 IP54 CLF ..... W FD 7.5 R SB 220 SA .....
OPTIONEN
BREMSVERSOR-
GUNG
GLEICHRICHTERTYP
AC/DC
NB, SB, NBR, SBR
BREMSHANDLÜFTUNG
R, RM
BREMSMOMENT
BREMSENTYP
FD (G.S. Bremse)
FA (W.S. Bremse)
KLEMMKASTENLAGE
W (default), N, E, S
BAUFORM
— (Kompaktmotor)
B5 (IEC - Motor)
ISOLIERUNGSKLASSE
CL F Standard
CL H Option
SCHUTZART
IP55 Standard (IP54 - Bremssmotor)
SPANNUNG - FREQUENZ
POLZAHL
2, 4, 6, 2/4, 2/6, 2/8, 2/12, 4/6, 4/8
MOTOR-BAUGRÖSSE
0B ... 5LA (Kompaktmotor)
63A ... 280M (IEC - Motor)
MOTORTYP
MX = Dreiphasen Kompaktmotor, Klasse IE3
BX = Dreiphasen IEC Motor, Klasse IE3
ME = Dreiphasen Kompaktmotor, Klasse IE2
BE = Dreiphasen IEC Motor, Klasse IE2
M = Dreiphasen Kompaktmotor
BN = Dreiphasen IEC Motor

20.1 Getriebe Optionen

SO
Bei Lieferung ohne Schmierstoff (nur bei C05, C12, C22, C32, C36 und C41).

LO
Für Getriebe C51, C61, C70, C80, C90, C100 die gewöhnlich ohne Schmiermittel geliefert werden, in Übereinstimmung mit der Einbaulage gefüllt mit dem normalerweise von BONFIGLIOLI RIDUTTORI verwendeten synthetischen Schmierstoff.

DL
Die Abtriebswelle ist mit Doppeldichtring geliefert.

DV
2 Wellendichtringe auf der eintreibenden Welle. (Nur für Kompaktgetriebemotoren).

VV
Wellendichtringe aus Fluor-Elastomer auf der eintreibenden Welle.

PV
Alle Wellendichtringe aus Fluor-Elastomer.

RB
Die Getriebe der Bauarten C12, C22, C32, C36, C41, C51 und C61, deren Lieferung in der Regel mit Winkelspiel-Standardwerten erfolgt, werden in diesem Fall mit reduzierten Winkelspielwerten geliefert. Die entsprechenden Winkelspielwerte sind in der nachstehenden Tabelle aufgeführt.

(B 12)

		standard			RB	
C 05	i =	5.5 ; 9.3 ; 15.6 ; 27.1	6.7 ; 7.4 ; 11.2 ; 12.5 ; 18.9 ; 21.0 ; 32.8_44.7		—	
	φ [’]	**34**	**29**			
C 12	i =	2.8_6.2	7.6_66.2		2.8_6.2	7.6_66.2
	φ [’]	**55**	**29**		**—**	**13**
C 22	i =	2.7_6.1	7.1_261.0		2.7_6.1	7.1_261.0
	φ [’]	**47**	**25**		**—**	**12**
C 32	i =	2.9_6.3	7.2_274.7		2.9_6.3	7.2_274.7
	φ [’]	**39**	**21**		**—**	**11**
C 36	i =	2.7_5.8	6.8_19.0	22.1_848.5	2.7_5.8	6.8_848.5
	φ [’]	**37**	**20**	**17**	**—**	**10**
C 41 2	i =	2.7_6.0	6.4_44.8	—	2.7_6.0	6.4_44.8
	φ [’]	**34**	**17**		**—**	**9**
C 41 3/4	i =	**—**	**—**	28.5_855.5	**—**	28.5_855.5
	φ [’]			**15**		**9**
C 51 2	i =	2.6_5.6	7.0_57.0	—	2.6_5.6	7.0_57.0
	φ [’]	**32**	**15**		**—**	**8**
C 51 3/4	i =	**—**	**—**	21.8_884.9	**—**	21.8_884.9
	φ [’]			**13**		**8**
C 61 2	i =	2.8_6.0	6.7_38.0	—	2.8_6.0	6.7_38.0
	φ [’]	**27**	**13**		**12**	**7**
C 61 3/4	i =	**—**	**—**	26.8_796.1	**—**	26.8_796.1
	φ [’]			**11**		**7**
C 70	i =	4.6_34.7	41.3_1476		—	
	φ [’]	**18**	**20**			
C 80	i =	5.6_39.1	43.5_1481		—	
	φ [’]	**16**	**18**			
C 90	i =	5.2_35.1	39.4_1240		—	
	φ [’]	**16**	**18**			
C 100	i =	4.9_29.6	34.3_1081		—	
	φ [’]	**14**	**16**			

Für die Lieferzeiten, wenden Sie sich, bitte, an das Vertriebsnetz Bonfiglioli

OBERFLÄCHENSCHUTZ

Wenn keine besondere Korrosionsschutzklasse gefordert ist, ist die lackierte Oberfläche des Getriebes mindestens mit einem Schutz gegen Korrosion der Klasse C2 nach UNI EN ISO 12944-2 geschützt
Für eine bessere Witterungsbeständigkeit können die Getriebe, durch eine Lackierung des ganzen Getriebes, mit einem Oberflächenschutz der Klassen **C3** und **C4** geliefert werden.

(B 13)

OBERFLÄ-CHENSCHUTZ	Typische Umgebungen	Maximale Ober-flächen-temperatu	Korrosionsschutzklasse nach UNI EN ISO 12944-2
C3	Stadt- und Industrieumgebung mit bis zu 100% relativer Luftfeuchtig-keit (mittlere Luftverschmutzung)	120°C	C3
C4	Industrie- und Küstengebiete und Chemieanlagen mit bis zu 100% relativer Luftfeuchtigkeit (hohe Luftverschmutzung)	120°C	C4

Getriebe mit einem optionalen Korrosionsschutz der Klassen **C3** oder **C4** sind in einer Auswahl von Farben verfügbar. Wenn keine spezielle Farbe gefordert ist, (siehe Option „Lackierung“) ist der Decklack in RAL 7042.
Unsere Getriebe können auch mit Oberflächenschutz der Klasse **C5** nach UNI EN ISO 12944-2 versehen werden. Für weitere technische Informationen wenden Sie bitte an unseren Technischen Service.

LACKIERUNG

Getriebe mit Oberflächenschutz der Klasse C3 oder C4, sind in den, in der folgenden Liste aufgelisteten Farben, verfügbar.

(B 14)

LACKIERUNG	Farbe	RAL Nummer
RAL7042*	Traffic Grey A	7042
RAL5010	Gentian Blue	5010
RAL9005	Jet Black	9005
RAL9006	White Aluminium	9006
RAL9010	Pure White	9010

* Die Getriebe werden in dieser Standardfarbe geliefert, wenn keine andere Farbe angegeben ist.

Hinweis – Die Option “Lackierung” kann nur im Zusammenhang mit dem Oberflächenschutz spezifiziert werden.

NACHWEISE

AC - Konformitätsbescheinigung Dokument mit dessen Ausstellung die Konformität des Produkts mit dem Auftrag, und dessen Konstruktion in Konformität mit den vom Qualitätsmanagementsystem von Bonfiglioli Riduttori vorgesehenen Standardfertigungs- und -kontrollverfahren bescheinigt wird.

CC – Prüfzeugnis
Die Bestellung führt zur Durchführung von Kontrollen der Konformität mit dem Auftrag, allgemeinen Sichtkontrollen und instrumentalen Prüfungen der Passmaße. Des Weiteren werden allgemeine Betriebskontrollen bei Leerlauf sowie Prüfungen der Funktionalität der Dichtungen bei Stillstand und während des Betriebs durchgef hrt. Die Pr fung wird anhand einer Stichprobe des Versandloses durchgef hrt.

20.2 Optionen Motoren

AA, AC, AD
Geben die Lage des Bremslüfterhebels zum Klemmenkasten an. Standard ist 90° im Uhrzeigersinn beim Ansehen der Lüfterradseite. AA = 0°, AC = 180°, AD = 90° entgegen dem Uhrzeigersinn.

AL, AR
Für Getriebemotoren mit Integralmotor der Baureihe M oder ME steht die Option Rücklaufsperre zur Verfügung, welche auf dem Motor selbst installiert ist und im Abschnitt über die Elektromotoren in diesem Katalog beschrieben wird. Die folgende Tabelle zeigt die freie Drehrichtung des Getriebemotors, anhand welcher die Option entsprechend gewählt werden muss.

(B 15)

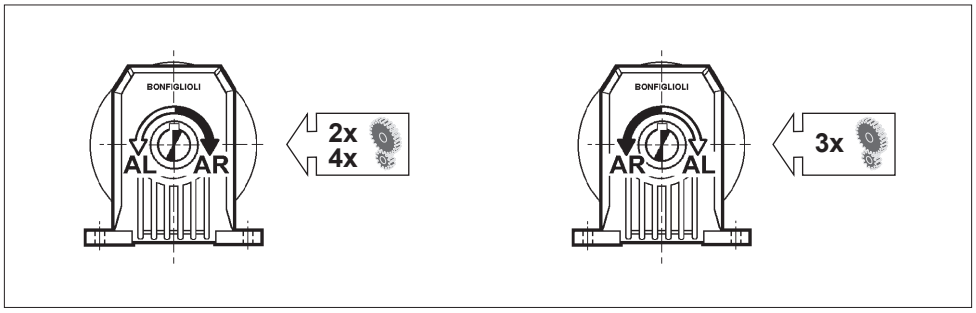

CF
Kapazitive filter.

D3
3 Bimetallfühler in den Wicklungen mit Temperatur von 150°C.

E3
3 Kaltleiterthermistoren in den Wicklungen mit Temperatur von 150°C.

F1
Schwungrad zum sanften Anfahren.

H1
Wicklungsheizung Standardspannung 1~ 230 V ±10%

PN
Die 60 Hz-Leistung wird an der 50 Hz-Normleistung ausgegliechen.

PS
Zweites Wellenende (schließt die Optionen RC und U1 aus).

RC
Schutzdach (schließt Option PS aus).

RV
Läufer in Vibrationsgrad B ausgewuchtet.

TC
Bei dieser Option handelt es sich um ein Schutzdachs mit einem Textilnetz, dessen Einsatz empfohlen wird wenn der Motor in Bereichen der Textilindustrie installiert wird.
Diese Option schließt die Möglichkeit der Optionen EN_ .

TP
Tropenfestigkeit.

U1
Fremdbelüftung (Nicht anwendbare Gesamtheit an den Optionen PS und CUS).

U2
Servoventilator ohne Klemmenkasten, bereits intern verkabelt. Nicht anwendbare Gesamtheit an den Optionen PS und CUS. Verfügbar für folgende Motoren: BN 71, BE 80 ... BE 132, M1, ME2 ... ME4.

Siehe die Kapitel im Teil Elektromotoren für weitere informationen.

21 SCHMIERUNG

Die Schmierung der Getriebe von Bonfiglioli erfolgt durch eine Kombination aus Ölbad- und Tauchschmierung.
Die Getriebegrößen C05, C12, C22, C32, C36 und C41 sind ab Werk mit einer Lebensdauerschmierung versehen.
Die Getriebe ab der Größe C51 werden ohne Ölfüllung ausgeliefert. Vor der Inbetriebnahme muss deshalb auf das Einfüllen der richtigen Ölfüllmenge geachtet werden!
In beiden Fälle, nach den Ausführungen, vor des Getriebe Inbetriebnahme, könnte notwendig sein, den geschlossen Pfropfen mit dem Entlueftungspfropfen, der zusammen mit dem Getriebe geliefert ist, zu wechseln.
Hinsichtlich der Bezugsübersichten mit der Einbaulage der Serviceschrauben/Stopfen und den Angaben zu den Schmierstoffmengen bitte die Betriebs- und Wartungsanleitung einsehen (auf www.bonfiglioli.com verfügbar).
Die mit Lebensdauerschmierung gelieferten Serien sind mit synthetischem Öl auf Polyglykolbasis gefüllt. Falls dieses Öl nicht verunreinigt wird, ist während der Lebensdauer des Getriebes kein Ölwechsel nötig. Die Getriebe dürfen bei einer Umgebungstemperatur von -20°C bis +40°C betrieben werden. Allerdings darf ein Start unter Last bei -20°C bis -10°C erst nach stufenweiser und gleichmäßiger Vorwärmung erfolgen. Anderfalls muss das Anfahren ohne Last erfolgen.
Die Last darf erst zugeschaltet werden, wenn die Getriebeeinheit eine Temperatur von mindestens -10° oder höher erreicht hat.

22 EINBAULAGEN UND LAGE DES KLEMMENKASTENS

Die Angaben zur Lage des Klemmenkastens beziehen sich auf das von der Lüfterseite her betrachtete Getriebe. Die Standardorientierung ist schwarz hervorgehoben (W).

Winkellage des Handlüfterhebels.
Bei Bremsmotoren wird der Handlüfterhebel (auf Anfrage) standardmäßig auf 90° gegenüber des Klemmkastens (AB-Anordnung) geliefert; wird eine andere Anordnung verlangt, muß dies bei der Bestellung durch das geeignete Option angegeben werden.

(B 16)

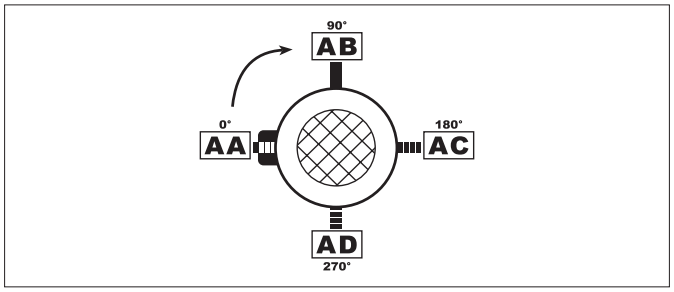

C ... P

B3

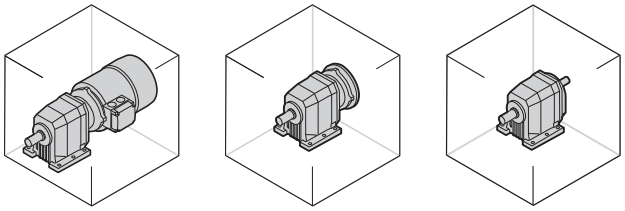

_S _P(IEC) _SK / _SC _HS

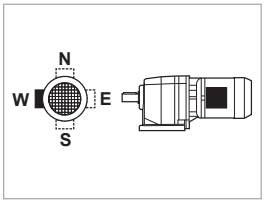

B6

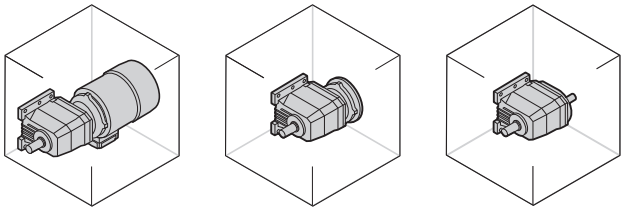

_S _P(IEC) _SK / _SC _HS

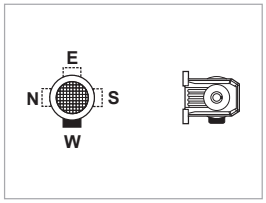

B7

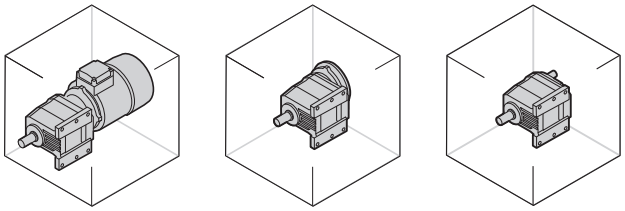

_S _P(IEC) _SK / _SC _HS

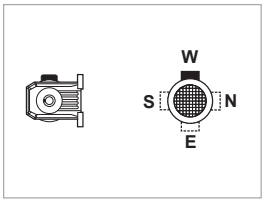

B8

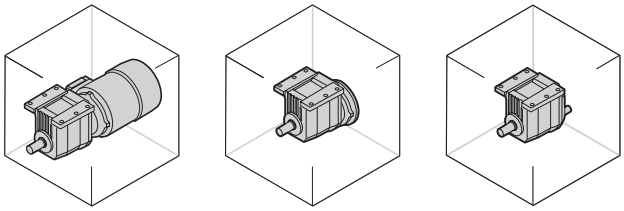

_S _P(IEC) _SK / _SC _HS

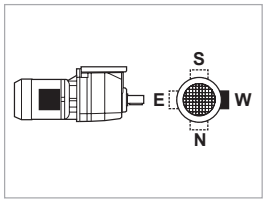

V5

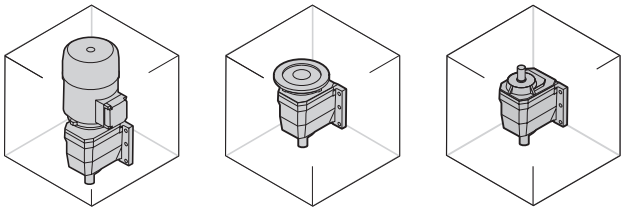

_S _P(IEC) _SK / _SC _HS

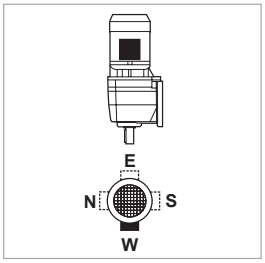

V6

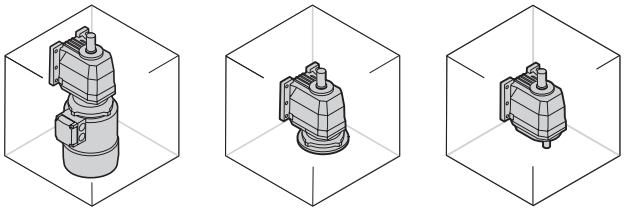

_S _P(IEC) _SK / _SC _HS

W = Default

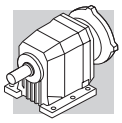

C ... F C ... U C ... UF

B5

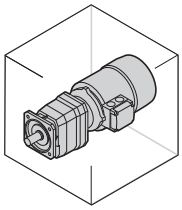

_S

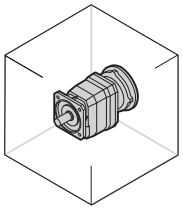

_P(IEC) _SK / _SC

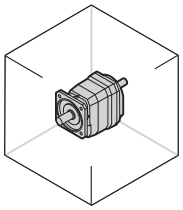

_HS

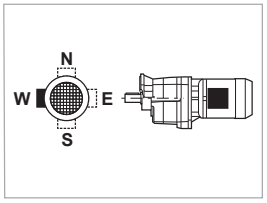

B51

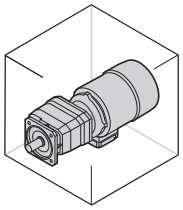

_S

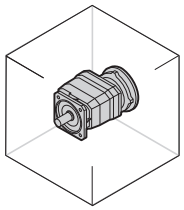

_P(IEC) _SK / _SC

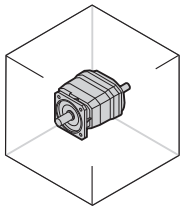

_HS

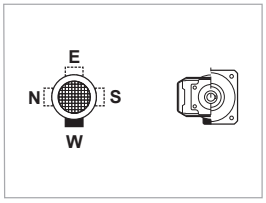

B53

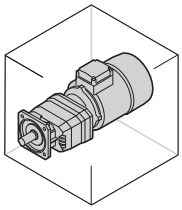

_S

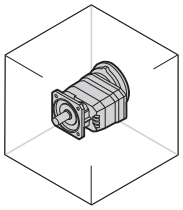

_P(IEC) _SK / _SC

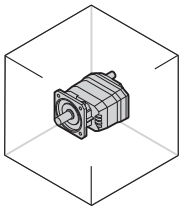

_HS

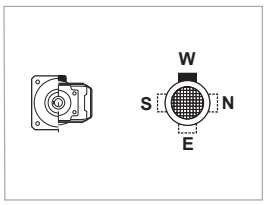

B52

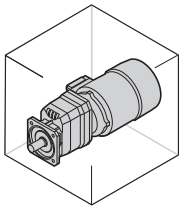

_S

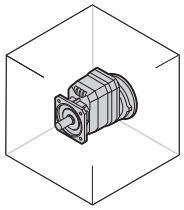

_P(IEC) _SK / _SC

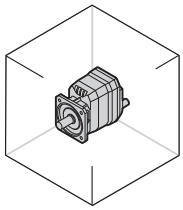

_HS

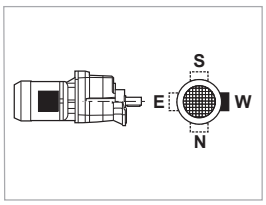

V1

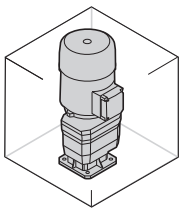

_S

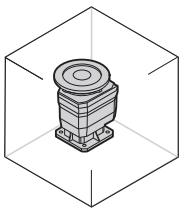

_P(IEC) _SK / _SC

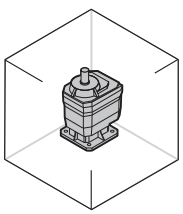

_HS

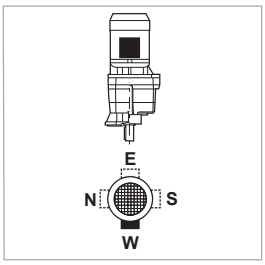

V3

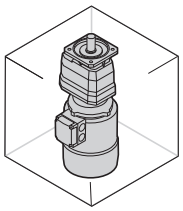

_S

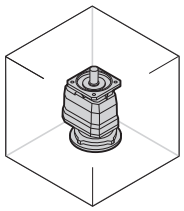

_P(IEC) _SK / _SC

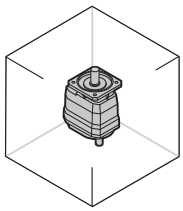

_HS

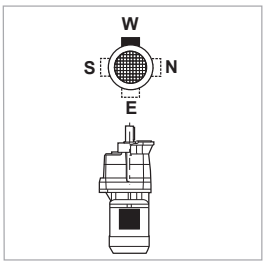

W = Default

23 RADIALKRÄFTE

Die mit den Antriebs- und/oder Abtriebswellen des Getriebes verbundenen Antriebsorgane bilden Kräfte, die in radiale Richtung auf die Welle selbst wirken.
Das Ausmaß dieser Kräfte muß mit der Festigkeit des Systems aus Getriebewelle/-lager kompatibel sein, insbesondere muß der absolute Wert der angetragenen Belastung (R_{c1} für Antriebswelle und R_{c2} für Abtriebswelle) unter dem in den Tabellen der Technischen Daten angegebenen Nennwert (R_{n1} für Antriebswelle und R_{n2} für Abtriebswelle) liegen.
In den nachstehenden Formeln bezieht sich die Angabe (1) auf die Maße der Antriebswelle, die Angabe (2) auf die Abtriebswelle.
Die von einem externen Antrieb erzeugte Kraft kann, recht genau, anhand der nachstehenden Formel berechnet werden:

$$R_{c1}[N] = \frac{2000 \cdot M_1[Nm] \cdot K_r}{d\,[mm]} \quad ; \quad R_{c2}[N] = \frac{2000 \cdot M_2[Nm] \cdot K_r}{d\,[mm]} \qquad (15)$$

(B 17)

M_1 [Nm]	Drehmoment an der Antriebswelle
M_2 [Nm]	Drehmoment an der Abtriebswelle
d [mm]	Teilkreisdurchmesser von auf der Abtriebswelle montiertem Bauteil
K_r = 1	Kettenantrieb

K_r = 1,25	Zahnradantrieb
K_r = 1,5	Antrieb über Keilriemen
K_r = 2,0	Antrieb über Flachriemen

In Abhängigkeit zum Kraftanangriffspunkt an der Welle erfolgt die Kontrolle hinsichtlich der Kompatibilität in unterschiedlicher Weise und insbesondere:

(B 18)

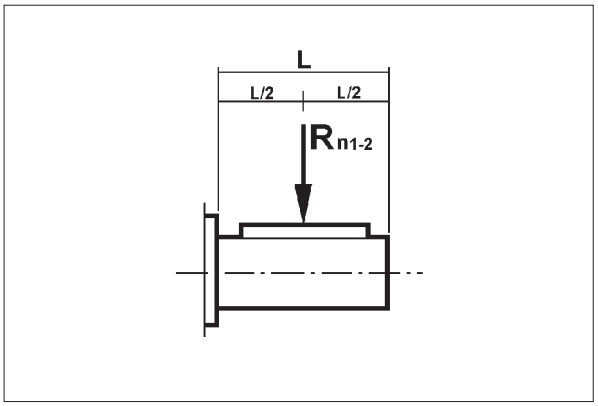

(B 19)

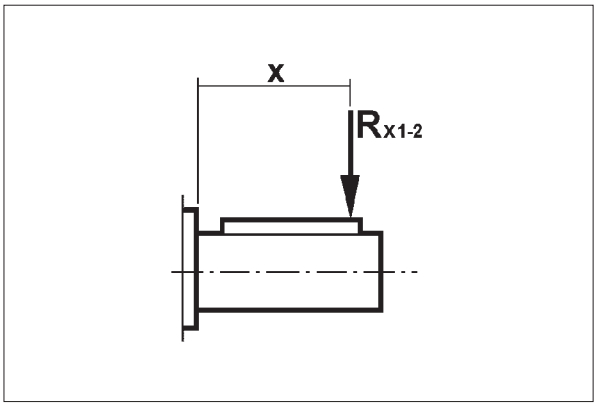

a) Kraftangriffspunkt in der Mitte, Tab. (B18)

Der zuvor errechnete Wert muß mit dem im Katalog angegebenen Nennwert verglichen werden. Es muß sich folgendes ergeben:

$R_{c1} \leq R_{n1}$ [Antriebswelle]

oder

$R_{c2} \leq R_{n2}$ [Abtriebswelle]

b) Von der Mitte versetzter Kraftangriffspunkt Tab. (B19)

Der auf einer Distanz “x” vom Wellenansatz liegende Kraftangriffspunkt fordert eine erneute Berechnung des für diesen Abstand zulässigen Werts.
Der neue Wert wird mit den Symbolen R_{x1} (Antrieb) und R_{x2} (Abtrieb) gekennzeichnet und unter Anwendung der nachstehenden Faktorenberechnung aus den Katalog- werten R_{n1} und R_{n2}:

$$\frac{a}{b+x} \qquad (16)$$

(B 20)

	Getriebekonstanten					
	Abtriebswelle			Antriebswelle		
	a	**b**	**c**	**a**	**b**	**c**
C 05 2	38	18	250	—	—	—
C 12 2	46	26	450	21	1	300
C 22 2	53	28	550	40	20	350
C 22 3	53	28	550	21	1	300
C 32 2	60.5	30.5	750	41.5	21.5	350
C 32 3	60.5	30.5	750	21	1	300
C 36 2 - C 36 3	69.5	34.5	800	51.5	26.5	450
C 36 4	69.5	34.5	800	21	1	300
C 41 2 - C 41 3	69.5	34.5	850	51.5	26.5	450
C 41 4	69.5	34.5	850	40	20	350
C 51 2 - C 51 3	76.5	36.5	900	51.5	26.5	450
C 51 4	76.5	36.5	900	41.5	21.5	350
C 61 2 - C 61 3	95.5	45.5	1000	57.5	27.5	450
C 61 4	95.5	45.5	1000	51.5	26.5	450
C 70 2 - C 70 3	114	54	1200	86	31	1000
C 70 4	114	54	1200	49.5	24.5	450
C 80 2 - C 80 3	131	61	1500	86	31	1000
C 80 4	131	61	1500	49.5	24.5	450
C 90 2 - C 90 3	161	76	2000	116	46	1400
C 90 4	161	76	2000	49.5	24.5	450
C 100 2 - C 100 3	163.5	58.5	2500	116	46	1400
C 100 4	163.5	58.5	2500	49.5	24.5	450

Das Kontrollverfahren zieht die nachstehend beschriebenen Schritte nach sich.

ANTRIESBWELLE

1. Berechnung von:

$$R_{x1} = R_{n1} \cdot \frac{a}{b + x} \qquad (17)$$

HINWEIS unter der Bedingung, daß:

$$\frac{L}{2} \leq x \leq c \qquad (18)$$

Dies als Voraussetzung, muß sich folgendes ergeben:

$$R_{c1} \leq R_{x1} \qquad (19)$$

ABTRIEBSWELLE

1. Berechnung von:

$$R_{x2} = R_{n2} \cdot \frac{a}{b + x} \qquad (20)$$

HINWEIS unter der Bedingung, daß:

$$\frac{L}{2} \leq x \leq c \qquad (21)$$

Dies als Voraussetzung, muß sich folgendes ergeben:

$$R_{c2} \leq R_{x2} \qquad (22)$$

24 AXIALKRÄFTE, A_{n1}, A_{n2}

Die Werte der zulässigen, auf die Antriebswelle [A_{n1}] und auf die Abtriebswelle [A_{n2}] einwirkenden Axialkräfte können unter Bezugnahme auf den jeweiligen Wert der Radialkraft [R_{n1}] und [R_{n2}] anhand der nachstehenden Angaben berechnet werden:

$$A_{n1} = R_{n1} \cdot 0.2$$
$$A_{n2} = R_{n2} \cdot 0.2 \qquad (23)$$

Die so errechneten Werte der zulässigen Axialkräfte beziehen sich auf den Fall, in dem die Axialkräfte gleichzeitig mit den Nennradialkräften einwirken.
Nur im Fall, es keine Radialbelastung auf die Getriebewelle gibt, ist der Wert der zulässigen Axialbelastung [A_n] gleich zu 50% der zulässigen Radialbelastung [R_n] auf die gleiche Welle.
In Anwesenheit von übermäßigen Axialkräften, oder stark auf die Radialkräfte einwirkende Kräfte, wird im Hinblick auf eine genaue Kontrolle empfohlen, sich mit dem Technischen Kundendienst der Bonfiglioli Riduttori in Verbindung zu setzen.

Die Auswahl der Motoren ohne Bremse erfolgt nach den Vorgaben der Verordnung EG 640/2009 (siehe abschnitt **M** dieses Katalogs). Für Nennleistungen unter 0,75 kW können die BN/M-Motoren vorgesehen werden.
Die Verordnung EG 640/2009 gilt nicht für die Bremsmotoren, d.h., bei der Auswahl der Bremsmotoren sind die BN/M-Motoren in Betracht zu ziehen, ohne den Wert der Nennleistung zu berücksichtigen.
Die BX, BE, MX und ME-Bremsmotoren sind auf Anfrage verfügbar.

0.09 kW

n_2 min-1	M_2 Nm	S	i	R_{n2} N	IE1		IEC IE1	
1.0	760	0.8	855.5	7000	**C414_855.5 S05 M05A6**	138	**C414_855.5 P63 BN63A6**	139
1.2	654	0.9	735.9	7000	**C414_735.9 S05 M05A6**	138	**C414_735.9 P63 BN63A6**	139
1.3	597	1.0	671.3	7000	**C414_671.3 S05 M05A6**	138	**C414_671.3 P63 BN63A6**	139
1.5	511	0.9	574.7	6500	**C364_574.7 S05 M05A6**	134	**C364_574.7 P63 BN63A6**	139
1.6	483	1.2	543.5	7000	**C414_543.5 S05 M05A6**	138	**C414_543.5 P63 BN63A6**	139
1.6	489	0.9	848.5	6500	**C364_848.5 S0 M0B4**	134		
1.8	434	1.0	754.2	6500	**C364_754.2 S0 M0B4**	134		
1.9	407	1.1	458.4	6500	**C364_458.4 S05 M05A6**	134	**C364_458.4 P63 BN63A6**	139
2.0	400	1.5	450.2	7000	**C414_450.2 S05 M05A6**	138	**C414_450.2 P63 BN63A6**	139
2.0	384	1.2	665.9	6500	**C364_665.9 S0 M0B4**	134		
2.3	331	1.4	574.7	6500	**C364_574.7 S0 M0B4**	134		
2.6	301	1.5	341.7	6500	**C364_341.7 S05 M05A6**	134	**C364_341.7 P63 BN63A6**	139
2.6	296	2.0	333.4	7000	**C414_333.4 S05 M05A6**	138	**C414_333.4 P63 BN63A6**	139
2.6	298	1.5	517.2	6500	**C364_517.2 S0 M0B4**	134		
2.9	264	1.7	458.4	6500	**C364_458.4 S0 M0B4**	134		
3.2	250	1.1	274.7	5500	**C323_274.7 S05 M05A6**	130	**C323_274.7 P63 BN63A6**	131
3.2	242	1.9	420.2	6500	**C364_420.2 S0 M0B4**	134		
3.6	218	2.1	377.9	6500	**C364_377.9 S0 M0B4**	134		
3.9	205	1.0	225.8	5000	**C223_225.8 S05 M05A6**	126	**C223_225.8 P63 BN63A6**	127
4.0	197	2.3	341.7	6500	**C364_341.7 S0 M0B4**	134		
4.1	196	1.5	215.6	5500	**C323_215.6 S05 M05A6**	130	**C323_215.6 P63 BN63A6**	131
4.2	184	2.4	318.9	6500	**C364_318.9 S0 M0B4**	134		
4.6	168	2.7	290.9	6500	**C364_290.9 S0 M0B4**	134		
4.9	162	1.2	178.5	5000	**C223_178.5 S05 M05A6**	126	**C223_178.5 P63 BN63A6**	127
4.9	163	1.6	274.7	5500	**C323_274.7 S0 M0B4**	130		
5.2	155	1.0	261.0	5000	**C223_261.0 S0 M0B4**	126		
5.3	147	3.1	255.0	6500	**C364_255.0 S0 M0B4**	134		
5.5	145	1.8	244.2	5500	**C323_244.2 S0 M0B4**	130		
5.8	138	1.5	151.7	5000	**C223_151.7 S05 M05A6**	126	**C223_151.7 P63 BN63A6**	127
5.9	135	2.2	148.4	5500	**C323_148.4 S05 M05A6**	130	**C323_148.4 P63 BN63A6**	131
6.0	134	1.4	225.8	5000	**C223_225.8 S0 M0B4**	126		
6.3	128	2.3	215.6	5500	**C323_215.6 S0 M0B4**	130		
6.7	119	1.6	200.7	5000	**C223_200.7 S0 M0B4**	126		
7.2	111	1.8	122.2	5000	**C223_122.2 S05 M05A6**	126	**C223_122.2 P63 BN63A6**	127
7.2	111	2.7	122.4	5500	**C323_122.4 S05 M05A6**	130	**C323_122.4 P63 BN63A6**	131
7.3	111	2.7	186.0	5500	**C323_186.0 S0 M0B4**	130		
7.6	106	1.9	178.5	5000	**C223_178.5 S0 M0B4**	126		
7.9	102	2.0	112.0	5000	**C223_112.0 S05 M05A6**	126	**C223_112.0 P63 BN63A6**	127
8.1	100	3.0	167.4	5500	**C323_167.4 S0 M0B4**	130		
8.8	91	2.2	100.2	5000	**C223_100.2 S05 M05A6**	126	**C223_100.2 P63 BN63A6**	127
8.9	90	2.2	151.7	5000	**C223_151.7 S0 M0B4**	126		
9.9	81	2.5	136.5	5000	**C223_136.5 S0 M0B4**	126		

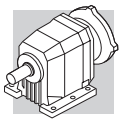

0.09 kW

n_2 min-1	M_2 Nm	S	i	R_{n2} N	IE1		IEC IE1	
10.7	75	2.7	82.6	5000	**C223_82.6 S05 M05A6**	126	**C223_82.6 P63 BN63A6**	127
11.0	73	2.8	122.2	5000	**C223_122.2 S0 M0B4**	126		
12.1	67	3.0	112.0	5000	**C223_112.0 S0 M0B4**	126		
13.3	61	1.5	66.2	2000	**C122_66.2 S05 M05A6**	122	**C122_66.2 P63 BN63A6**	123
16.0	51	1.8	55.2	2000	**C122_55.2 S05 M05A6**	122	**C122_55.2 P63 BN63A6**	123
18.5	44	2.0	47.6	2000	**C122_47.6 S05 M05A6**	122	**C122_47.6 P63 BN63A6**	123
19.7	42	1.1	44.7	1170	**C052_44.7 S05 M05A6**	121		
20.4	40	2.2	66.2	2000	**C122_66.2 S0 M0B4**	122		
20.8	39	2.3	42.3	2000	**C122_42.3 S05 M05A6**	122	**C122_42.3 P63 BN63A6**	123
21.8	38	1.2	40.3	1150	**C052_40.3 S05 M05A6**	121		
23.8	34	2.6	37.0	2000	**C122_37.0 S05 M05A6**	122	**C122_37.0 P63 BN63A6**	123
24.2	34	1.3	36.4	1140	**C052_36.4 S05 M05A6**	121		
24.5	34	2.7	55.2	2000	**C122_55.2 S0 M0B4**	122		
26.8	31	1.5	32.8	1110	**C052_32.8 S05 M05A6**	121		
26.8	31	2.9	32.8	2000	**C122_32.8 S05 M05A6**	122	**C122_32.8 P63 BN63A6**	123
28.4	29	3.1	47.6	2000	**C122_47.6 S0 M0B4**	122		
30	27	1.7	44.7	1170	**C052_44.7 S0 M0B4**	121		
33	25	1.8	40.3	990	**C052_40.3 S0 M0B4**	121		
37	22	2.0	36.4	980	**C052_36.4 S0 M0B4**	121		
41	20	2.3	32.8	960	**C052_32.8 S0 M0B4**	121		
42	19	2.3	21.0	1020	**C052_21.0 S05 M05A6**	121		
50	16	2.7	27.1	930	**C052_27.1 S0 M0B4**	121		
56	15	3.1	15.6	950	**C052_15.6 S05 M05A6**	121		
66	12	6.5	13.4	2000	**C122_13.4 S05 M05A6**	122	**C122_13.4 P63 BN63A6**	123
71	12	3.9	12.5	900	**C052_12.5 S05 M05A6**	121		
74	11	7.0	11.9	2000	**C122_11.9 S05 M05A6**	122	**C122_11.9 P63 BN63A6**	123
78	10	4.3	11.2	880	**C052_11.2 S05 M05A6**	121		
88	9	7.7	10.1	2000	**C122_10.1 S05 M05A6**	122	**C122_10.1 P63 BN63A6**	123
95	9	5.2	9.3	830	**C052_9.3 S05 M05A6**	121		
100	8	8.4	8.8	2000	**C122_8.8 S05 M05A6**	122	**C122_8.8 P63 BN63A6**	123
119	7	6.5	7.4	780	**C052_7.4 S05 M05A6**	121		
132	6	7.3	6.7	760	**C052_6.7 S05 M05A6**	121		
146	6	10.9	6.2	1960	**C122_6.2 S05 M05A6**	122	**C122_6.2 P63 BN63A6**	123
157	5	11.1	5.6	1850	**C122_5.6 S05 M05A6**	122	**C122_5.6 P63 BN63A6**	123
159	5	8.8	5.5	720	**C052_5.5 S05 M05A6**	121		
187	4	12.6	4.9	1810	**C122_4.9 S05 M05A6**	122	**C122_4.9 P63 BN63A6**	123
205	4	13.0	4.3	1730	**C122_4.3 S05 M05A6**	122	**C122_4.3 P63 BN63A6**	123
249	3	15.0	3.7	1650	**C122_3.7 S05 M05A6**	122	**C122_3.7 P63 BN63A6**	123
275	3	15.4	3.2	1580	**C122_3.2 S05 M05A6**	122	**C122_3.2 P63 BN63A6**	123
329	2	17.3	2.8	1510	**C122_2.8 S05 M05A6**	122	**C122_2.8 P63 BN63A6**	123

0.12 kW

n_2 min-1	M_2 Nm	S	i	R_{n2} N	IE1		IEC IE1	
0.98	1061	0.9	884.9	10000			**C514_884.9 P63 BN63B6**	143
1.2	860	1.2	717.7	10000			**C514_717.7 P63 BN63B6**	143
1.5	681	0.9	855.5	7000	**C414_855.5 S05 M05A4**	138	**C414_855.5 P63 BN63A4**	139
1.6	643	1.6	808.0	10000			**C514_808.0 P63 BN63A4**	143
1.7	621	1.0	780.4	7000	**C414_780.4 S05 M05A4**	138	**C414_780.4 P63 BN63A4**	139
1.8	586	1.0	735.9	7000	**C414_735.9 S05 M05A4**	138	**C414_735.9 P63 BN63A4**	139
2.0	534	1.1	671.3	7000	**C414_671.3 S05 M05A4**	138	**C414_671.3 P63 BN63A4**	139
2.0	509	0.9	665.9	6500	**C364_665.9 S05 M05A4**	134	**C364_665.9 P63 BN63A4**	139
2.2	474	1.3	595.8	7000	**C414_595.8 S05 M05A4**	138	**C414_595.8 P63 BN63A4**	139
2.3	440	1.0	574.7	6500	**C364_574.7 S05 M05A4**	134	**C364_574.7 P63 BN63A4**	139
2.4	433	1.4	543.5	7000	**C414_543.5 S05 M05A4**	138	**C414_543.5 P63 BN63A4**	139
2.6	396	1.1	517.2	6500	**C364_517.2 S05 M05A4**	134	**C364_517.2 P63 BN63A4**	139

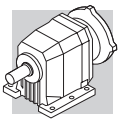

0.12 kW

n_2 min-1	M_2 Nm	S	i	R_{n2} N	IE1		IEC IE1	
2.7	393	1.5	493.5	7000	**C414_493.5 S05 M05A4**	138	**C414_493.5 P63 BN63A4**	139
2.9	351	1.3	458.4	6500	**C364_458.4 S05 M05A4**	134	**C364_458.4 P63 BN63A4**	139
2.9	358	1.7	450.2	7000	**C414_450.2 S05 M05A4**	138	**C414_450.2 P63 BN63A4**	139
3.1	333	1.8	418.5	7000	**C414_418.5 S05 M05A4**	138	**C414_418.5 P63 BN63A4**	139
3.2	321	1.4	420.2	6500	**C364_420.2 S05 M05A4**	134	**C364_420.2 P63 BN63A4**	139
3.4	304	2.0	381.8	7000	**C414_381.8 S05 M05A4**	138	**C414_381.8 P63 BN63A4**	139
3.6	289	1.6	377.9	6500	**C364_377.9 S05 M05A4**	134	**C364_377.9 P63 BN63A4**	139
3.9	265	2.3	333.4	7000	**C414_333.4 S05 M05A4**	138	**C414_333.4 P63 BN63A4**	139
4.0	261	1.7	341.7	6500	**C364_341.7 S05 M05A4**	134	**C364_341.7 P63 BN63A4**	139
4.2	244	1.8	318.9	6500	**C364_318.9 S05 M05A4**	134	**C364_318.9 P63 BN63A4**	139
4.3	242	2.5	304.2	7000	**C414_304.2 S05 M05A4**	138	**C414_304.2 P63 BN63A4**	139
4.6	223	2.0	290.9	6500	**C364_290.9 S05 M05A4**	134	**C364_290.9 P63 BN63A4**	139
4.9	219	0.9	178.5	5000	**C223_178.5 S05 M05B6**	126	**C223_178.5 P63 BN63B6**	127
4.9	217	1.2	274.7	5500	**C323_274.7 S05 M05A4**	130	**C323_274.7 P63 BN63A4**	131
5.0	209	2.9	263.0	7000	**C414_263.0 S05 M05A4**	138	**C414_263.0 P63 BN63A4**	139
5.3	195	2.3	255.0	6500	**C364_255.0 S05 M05A4**	134	**C364_255.0 P63 BN63A4**	139
5.5	193	1.3	244.2	5500	**C323_244.2 S05 M05A4**	130	**C323_244.2 P63 BN63A4**	131
5.8	177	2.5	230.9	6500	**C364_230.9 S05 M05A4**	134	**C364_230.9 P63 BN63A4**	139
6.0	178	1.0	225.8	5000	**C223_225.8 S05 M05A4**	126	**C223_225.8 P63 BN63A4**	127
6.3	170	1.8	215.6	5500	**C323_215.6 S05 M05A4**	130	**C323_215.6 P63 BN63A4**	131
6.5	163	2.8	206.4	6500	**C363_206.4 S05 M05A4**	134	**C363_206.4 P63 BN63A4**	135
6.7	159	1.2	200.7	5000	**C223_200.7 S05 M05A4**	126	**C223_200.7 P63 BN63A4**	127
7.3	147	2.0	186.0	5500	**C323_186.0 S05 M05A4**	130	**C323_186.0 P63 BN63A4**	131
7.4	145	3.1	183.5	6500	**C363_183.5 S05 M05A4**	134	**C363_183.5 P63 BN63A4**	135
7.6	141	1.4	178.5	5000	**C223_178.5 S05 M05A4**	126	**C223_178.5 P63 BN63A4**	127
8.1	132	2.3	167.4	5500	**C323_167.4 S05 M05A4**	130	**C323_167.4 P63 BN63A4**	131
8.9	120	1.7	151.7	5000	**C223_151.7 S05 M05A4**	126	**C223_151.7 P63 BN63A4**	127
9.1	117	2.6	148.4	5500	**C323_148.4 S05 M05A4**	130	**C323_148.4 P63 BN63A4**	131
9.9	108	1.9	136.5	5000	**C223_136.5 S05 M05A4**	126	**C223_136.5 P63 BN63A4**	127
9.9	108	2.8	136.0	5500	**C323_136.0 S05 M05A4**	130	**C323_136.0 P63 BN63A4**	131
11.0	97	3.1	122.4	5500	**C323_122.4 S05 M05A4**	130	**C323_122.4 P63 BN63A4**	131
11.0	97	2.1	122.2	5000	**C223_122.2 S05 M05A4**	126	**C223_122.2 P63 BN63A4**	127
12.1	89	2.3	112.0	5000	**C223_112.0 S05 M05A4**	126	**C223_112.0 P63 BN63A4**	127
13.5	79	2.5	100.2	5000	**C223_100.2 S05 M05A4**	126	**C223_100.2 P63 BN63A4**	127
15.3	70	2.9	88.5	5000	**C223_88.5 S05 M05A4**	126	**C223_88.5 P63 BN63A4**	127
16.3	65	3.1	82.6	5000	**C223_82.6 S05 M05A4**	126	**C223_82.6 P63 BN63A4**	127
20.4	53	1.7	66.2	2000	**C122_66.2 S05 M05A4**	122	**C122_66.2 P63 BN63A4**	123
21.3	51	2.5	63.3	5000	**C222_63.3 S05 M05A4**	126	**C222_63.3 P63 BN63A4**	127
24.5	45	2.0	55.2	2000	**C122_55.2 S05 M05A4**	122	**C122_55.2 P63 BN63A4**	123
24.7	44	3.5	54.7	5000	**C222_54.7 S05 M05A4**	126	**C222_54.7 P63 BN63A4**	127
28.4	38	2.3	47.6	2000	**C122_47.6 S05 M05A4**	122	**C122_47.6 P63 BN63A4**	123
29.3	37	1.2	44.7	1010	**C052_44.7 S05 M05A4**	121		
32	34	2.6	42.3	2000	**C122_42.3 S05 M05A4**	122	**C122_42.3 P63 BN63A4**	123
33	34	1.3	40.3	990	**C052_40.3 S05 M05A4**	121		
36	30	1.5	36.4	980	**C052_36.4 S05 M05A4**	121		
36	30	3.0	37.0	2000	**C122_37.0 S05 M05A4**	122	**C122_37.0 P63 BN63A4**	123
40	27	1.6	32.8	960	**C052_32.8 S05 M05A4**	121		
41	26	3.4	32.8	2000	**C122_32.8 S05 M05A4**	122	**C122_32.8 P63 BN63A4**	123
48	23	2.0	27.1	930	**C052_27.1 S05 M05A4**	121		
56	20	2.3	15.6	900	**C052_15.6 S05 M05B6**	121		
62	18	2.6	21.0	890	**C052_21.0 S05 M05A4**	121		
69	16	2.5	18.9	860	**C052_18.9 S05 M05A4**	121		
78	14	3.2	11.2	850	**C052_11.2 S05 M05B6**	121		
84	13	3.1	15.6	820	**C052_15.6 S05 M05A4**	121		
105	10	3.8	12.5	780	**C052_12.5 S05 M05A4**	121		
117	9	4.3	11.2	760	**C052_11.2 S05 M05A4**	121		
130	8	5.4	6.7	740	**C052_6.7 S05 M05B6**	121		
141	8	3.9	9.3	720	**C052_9.3 S05 M05A4**	121		
177	6	4.8	7.4	680	**C052_7.4 S05 M05A4**	121		
196	6	5.4	6.7	660	**C052_6.7 S05 M05A4**	121		

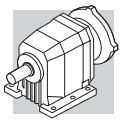

0.18 kW

n_2 min-1	M_2 Nm	S	i	R_{n2} N	IE1		IEC IE1	
0.66	2367	1.0	1362	25000			**C704_1362 P71 BN71A6**	151
0.84	1858	1.2	1069	25000			**C704_1069 P71 BN71A6**	151
1.2	1262	1.3	726.3	16000	**C614_726.3 S1 M1SC6**	146	**C614_726.3 P71 BN71A6**	147
1.3	1248	0.8	717.7	10000	**C514_717.7 S1 M1SC6**	142	**C514_717.7 P71 BN71A6**	143
1.5	1049	1.0	884.9	10000			**C514_884.9 P63 BN63B4**	143
1.6	958	1.0	808.0	10000			**C514_808.0 P63 BN63B4**	143
1.6	955	1.0	549.7	10000	**C514_549.7 S1 M1SC6**	142	**C514_549.7 P71 BN71A6**	143
1.8	861	1.9	726.3	16000			**C614_726.3 P63 BN63B4**	147
1.8	851	1.2	717.7	10000			**C514_717.7 P63 BN63B4**	143
1.9	806	1.2	463.9	10000	**C514_463.9 S1 M1SC6**	142	**C514_463.9 P71 BN71A6**	143
1.9	803	2.0	462.0	16000	**C614_462.0 S1 M1SC6**	146	**C614_462.0 P71 BN71A6**	147
2.0	796	0.8	671.3	7000	**C414_671.3 S05 M05B4**	138	**C414_671.3 P63 BN63B4**	139
2.0	783	0.8	450.2	7000	**C414_450.2 S1 M1SC6**	138	**C414_450.2 P71 BN71A6**	139
2.0	777	1.3	655.4	10000			**C514_655.4 P63 BN63B4**	143
2.2	727	0.8	418.5	7000	**C414_418.5 S1 M1SC6**	138	**C414_418.5 P71 BN71A6**	139
2.2	723	1.4	415.7	10000	**C514_415.7 S1 M1SC6**	142	**C514_415.7 P71 BN71A6**	143
2.2	706	0.8	595.8	7000	**C414_595.8 S05 M05B4**	138	**C414_595.8 P63 BN63B4**	139
2.4	660	1.5	379.6	10000	**C514_379.6 S1 M1SC6**	142	**C514_379.6 P71 BN71A6**	143
2.4	644	0.9	543.5	7000	**C414_543.5 S05 M05B4**	138	**C414_543.5 P63 BN63B4**	139
2.6	587	0.8	341.7	6300	**C364_341.7 S1 M1SC6**	134	**C364_341.7 P71 BN71A6**	139
2.7	585	1.0	493.5	7000	**C414_493.5 S05 M05B4**	138	**C414_493.5 P63 BN63B4**	139
2.9	534	1.1	450.2	7000	**C414_450.2 S05 M05B4**	138	**C414_450.2 P63 BN63B4**	139
2.9	536	0.8	458.4	6500	**C364_458.4 S05 M05B4**	134	**C364_458.4 P63 BN63B4**	139
3.1	492	0.9	420.2	6500	**C364_420.2 S05 M05B4**	134	**C364_420.2 P63 BN63B4**	139
3.2	496	1.2	418.5	7000	**C414_418.5 S05 M05B4**	138	**C414_418.5 P63 BN63B4**	139
3.5	452	1.3	381.8	7000	**C414_381.8 S05 M05B4**	138	**C414_381.8 P63 BN63B4**	139
3.5	442	1.0	377.9	6500	**C364_377.9 S05 M05B4**	134	**C364_377.9 P63 BN63B4**	139
3.9	400	1.1	341.7	6500	**C364_341.7 S05 M05B4**	134	**C364_341.7 P63 BN63B4**	139
4.0	395	1.5	333.4	7000	**C414_333.4 S05 M05B4**	138	**C414_333.4 P63 BN63B4**	139
4.1	373	1.2	318.9	6500	**C364_318.9 S05 M05B4**	134	**C364_318.9 P63 BN63B4**	139
4.3	371	1.6	209.1	7000	**C413_209.1 S1 M1SC6**	138	**C413_209.1 P71 BN71A6**	139
4.3	360	1.7	304.2	7000	**C414_304.2 S05 M05B4**	138	**C414_304.2 P63 BN63B4**	139
4.5	340	1.3	290.9	6500	**C364_290.9 S05 M05B4**	134	**C364_290.9 P63 BN63B4**	139
4.7	339	1.8	190.8	7000	**C413_190.8 S1 M1SC6**	138	**C413_190.8 P71 BN71A6**	139
4.8	330	0.9	186.0	5500	**C323_186.0 S1 M1SC6**	130	**C323_186.0 P71 BN71A6**	131
5.0	312	1.9	263.0	7000	**C414_263.0 S05 M05B4**	138	**C414_263.0 P63 BN63B4**	139
5.2	298	1.5	255.0	6500	**C364_255.0 S05 M05B4**	134	**C364_255.0 P63 BN63B4**	139
5.4	297	1.0	167.4	5500	**C323_167.4 S1 M1SC6**	130	**C323_167.4 P71 BN71A6**	131
5.4	295	0.9	244.2	5500	**C323_244.2 S05 M05B4**	130	**C323_244.2 P63 BN63B4**	131
5.7	270	1.7	230.9	6500	**C364_230.9 S05 M05B4**	134	**C364_230.9 P63 BN63B4**	139
6.1	261	1.2	215.6	5500	**C323_215.6 S05 M05B4**	130	**C323_215.6 P63 BN63B4**	131
6.4	250	1.8	206.4	6500	**C363_206.4 S05 M05B4**	134	**C363_206.4 P63 BN63B4**	135
7.1	225	1.3	186.0	5500	**C323_186.0 S05 M05B4**	130	**C323_186.0 P63 BN63B4**	131
7.2	222	2.0	183.5	6500	**C363_183.5 S05 M05B4**	134	**C363_183.5 P63 BN63B4**	135
7.4	216	0.9	178.5	5000	**C223_178.5 S05 M05B4**	126	**C223_178.5 P63 BN63B4**	127
7.9	202	1.5	167.4	5500	**C323_167.4 S05 M05B4**	130	**C323_167.4 P63 BN63B4**	131
8.1	196	2.3	162.0	6500	**C363_162.0 S05 M05B4**	134	**C363_162.0 P63 BN63B4**	135
8.7	183	1.1	151.7	5000	**C223_151.7 S05 M05B4**	126	**C223_151.7 P63 BN63B4**	127
8.9	179	1.7	148.4	5500	**C323_148.4 S05 M05B4**	130	**C323_148.4 P63 BN63B4**	131
9.4	169	2.7	139.8	6500	**C363_139.8 S05 M05B4**	134	**C363_139.8 P63 BN63B4**	135
9.7	165	1.2	136.5	5000	**C223_136.5 S05 M05B4**	126	**C223_136.5 P63 BN63B4**	127
9.7	164	1.8	136.0	5500	**C323_136.0 S05 M05B4**	130	**C323_136.0 P63 BN63B4**	131
10.5	152	3.0	125.8	6500	**C363_125.8 S05 M05B4**	134	**C363_125.8 P63 BN63B4**	135
10.8	148	2.0	122.4	5500	**C323_122.4 S05 M05B4**	130	**C323_122.4 P63 BN63B4**	131
10.8	148	1.4	122.2	5000	**C223_122.2 S05 M05B4**	126	**C223_122.2 P63 BN63B4**	127
11.8	135	1.5	112.0	5000	**C223_112.0 S05 M05B4**	126	**C223_112.0 P63 BN63B4**	127
11.8	135	3.3	111.5	6500	**C363_111.5 S05 M05B4**	134	**C363_111.5 P63 BN63B4**	135
11.9	134	2.2	110.6	5500	**C323_110.6 S05 M05B4**	130	**C323_110.6 P63 BN63B4**	131
12.8	125	2.4	103.3	5500	**C323_103.3 S05 M05B4**	130	**C323_103.3 P63 BN63B4**	131
12.9	124	3.6	102.2	6500	**C363_102.2 S05 M05B4**	134	**C363_102.2 P63 BN63B4**	135
13.2	121	1.7	100.2	5000	**C223_100.2 S05 M05B4**	126	**C223_100.2 P63 BN63B4**	127
14.0	114	2.6	94.2	5500	**C323_94.2 S05 M05B4**	130	**C323_94.2 P63 BN63B4**	131
14.9	107	1.9	88.5	5000	**C223_88.5 S05 M05B4**	126	**C223_88.5 P63 BN63B4**	127
16.0	100	2.0	82.6	5000	**C223_82.6 S05 M05B4**	126	**C223_82.6 P63 BN63B4**	127
16.0	100	3.0	82.6	5500	**C323_82.6 S05 M05B4**	130	**C323_82.6 P63 BN63B4**	131

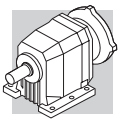

0.18 kW

n_2 min-1	M_2 Nm	S	i	R_{n2} N	IE1		IEC IE1	
17.6	90	2.2	74.8	5000	**C223_74.8 S05 M05B4**	126	**C223_74.8 P63 BN63B4**	127
17.7	90	3.2	74.7	5500	**C323_74.7 S05 M05B4**	130	**C323_74.7 P63 BN63B4**	131
19.8	83	2.6	66.8	5500	**C322_66.8 S05 M05B4**	130	**C322_66.8 P63 BN63B4**	131
20.0	82	1.1	66.2	2000	**C122_66.2 S05 M05B4**	122	**C122_66.2 P63 BN63B4**	123
20.2	79	2.5	65.3	5000	**C223_65.3 S05 M05B4**	126	**C223_65.3 P63 BN63B4**	127
20.9	78	1.7	63.3	5000	**C222_63.3 S05 M05B4**	126	**C222_63.3 P63 BN63B4**	127
22.0	73	2.6	60.0	5000	**C223_60.0 S05 M05B4**	126	**C223_60.0 P63 BN63B4**	127
22.2	73	2.9	59.4	5500	**C322_59.4 S05 M05B4**	130	**C322_59.4 P63 BN63B4**	131
23.9	68	1.3	55.2	2000	**C122_55.2 S05 M05B4**	122	**C122_55.2 P63 BN63B4**	123
24.1	68	2.3	54.7	5000	**C222_54.7 S05 M05B4**	126	**C222_54.7 P63 BN63B4**	127
27.1	60	2.6	48.6	5000	**C222_48.6 S05 M05B4**	126	**C222_48.6 P63 BN63B4**	127
27.7	59	1.5	47.6	2000	**C122_47.6 S05 M05B4**	122	**C122_47.6 P63 BN63B4**	123
31	53	3.6	43.3	5000	**C222_43.3 S05 M05B4**	126	**C222_43.3 P63 BN63B4**	127
31	52	1.7	42.3	2000	**C122_42.3 S05 M05B4**	122	**C122_42.3 P63 BN63B4**	123
33	50	0.9	40.3	850	**C052_40.3 S05 M05B4**	121		
36	45	1.0	36.4	850	**C052_36.4 S05 M05B4**	121		
36	46	2.0	37.0	2000	**C122_37.0 S05 M05B4**	122	**C122_37.0 P63 BN63B4**	123
40	40	2.2	32.8	2000	**C122_32.8 S05 M05B4**	122	**C122_32.8 P63 BN63B4**	123
40	41	1.1	32.8	840	**C052_32.8 S05 M05B4**	121		
45	36	2.5	29.5	2000	**C122_29.5 S05 M05B4**	122	**C122_29.5 P63 BN63B4**	123
49	34	1.3	27.1	820	**C052_27.1 S05 M05B4**	121		
52	31	2.8	25.4	2000	**C122_25.4 S05 M05B4**	122	**C122_25.4 P63 BN63B4**	123
57	29	3.0	23.2	2000	**C122_23.2 S05 M05B4**	122	**C122_23.2 P63 BN63B4**	123
63	26	1.7	21.0	810	**C052_21.0 S05 M05B4**	121		
64	25	3.2	20.6	2000	**C122_20.6 S05 M05B4**	122	**C122_20.6 P63 BN63B4**	123
70	23	1.7	18.9	790	**C052_18.9 S05 M05B4**	121		
72	23	3.4	18.4	2000	**C122_18.4 S05 M05B4**	122	**C122_18.4 P63 BN63B4**	123
77	21	3.6	17.2	2000	**C122_17.2 S05 M05B4**	122	**C122_17.2 P63 BN63B4**	123
85	19	2.1	15.6	760	**C052_15.6 S05 M05B4**	121		
106	15	2.6	12.5	740	**C052_12.5 S05 M05B4**	121		
118	14	2.9	11.2	720	**C052_11.2 S05 M05B4**	121		
142	11	2.6	9.3	690	**C052_9.3 S05 M05B4**	121		
178	9	3.3	7.4	650	**C052_7.4 S05 M05B4**	121		
197	8	3.6	6.7	640	**C052_6.7 S05 M05B4**	121		
229	7	7.4	11.9	1670	**C122_11.9 S05 M05A2**	122	**C122_11.9 P63 BN63A2**	123
240	7	4.4	5.5	600	**C052_5.5 S05 M05B4**	121		
268	6	8.1	10.1	1600	**C122_10.1 S05 M05A2**	122	**C122_10.1 P63 BN63A2**	123
310	5	8.9	8.8	1530	**C122_8.8 S05 M05A2**	122	**C122_8.8 P63 BN63A2**	123
354	5	9.8	7.6	1470	**C122_7.6 S05 M05A2**	122	**C122_7.6 P63 BN63A2**	123
440	4	11.3	6.2	1390	**C122_6.2 S05 M05A2**	122	**C122_6.2 P63 BN63A2**	123
488	3	11.9	5.6	1300	**C122_5.6 S05 M05A2**	122	**C122_5.6 P63 BN63A2**	123
577	3	13.4	4.9	1250	**C122_4.9 S05 M05A2**	122	**C122_4.9 P63 BN63A2**	123
635	3	14.0	4.3	1190	**C122_4.3 S05 M05A2**	122	**C122_4.3 P63 BN63A2**	123
770	2	16.0	3.7	1140	**C122_3.7 S05 M05A2**	122	**C122_3.7 P63 BN63A2**	123
853	2	16.7	3.2	1090	**C122_3.2 S05 M05A2**	122	**C122_3.2 P63 BN63A2**	123
1015	2	18.7	2.8	1040	**C122_2.8 S05 M05A2**	122	**C122_2.8 P63 BN63A2**	123

0.25 kW

n_2 min-1	M_2 Nm	S	i	R_{n2} N	IE1		IEC IE1	
0.61	3575	1.1	1481	35000			**C804_1481 P71 BN71B6**	154
0.77	2820	1.4	1168	35000			**C804_1168 P71 BN71B6**	154
1.2	1753	0.9	726.3	16000	**C614_726.3 S1 M1SD6**	146	**C614_726.3 P71 BN71B6**	147
1.6	1330	0.8	808.0	10000			**C514_808.0 P63 BN63C4**	143
1.6	1327	0.8	549.7	10000	**C514_549.7 S1 M1SD6**	142	**C514_549.7 P71 BN71B6**	143
1.9	1134	0.9	717.7	10000			**C514_717.7 P71 BN71A4**	143
1.9	1120	0.9	463.9	10000	**C514_463.9 S1 M1SD6**	142	**C514_463.9 P71 BN71B6**	143
2.0	1101	1.5	668.8	16000			**C614_668.8 P63 BN63C4**	147
2.4	894	1.8	370.1	16000	**C614_370.1 S1 M1SD6**	146	**C614_370.1 P71 BN71B6**	147
2.5	869	1.2	549.7	10000			**C514_549.7 P71 BN71A4**	143
2.9	741	0.8	450.2	7000	**C414_450.2 S05 M05C4**	138	**C414_450.2 P71 BN71A4**	139

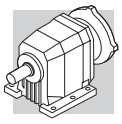

0.25 kW

n_2 min-1	M_2 Nm	S	i	R_{n2} N	IE1		IEC IE1	
3.2	689	0.9	418.5	7000	**C414_418.5 S05 M05C4**	138	**C414_418.5 P71 BN71A4**	139
3.2	684	1.5	415.7	10000			**C514_415.7 P71 BN71A4**	143
3.5	628	1.0	381.8	7000	**C414_381.8 S05 M05C4**	138	**C414_381.8 P71 BN71A4**	139
3.5	625	1.6	379.6	10000			**C514_379.6 P71 BN71A4**	143
3.8	567	0.8	344.3	6500	**C364_344.3 S05 M05C4**	134	**C364_344.3 P71 BN71A4**	139
4.0	549	1.1	333.4	7000	**C414_333.4 S05 M05C4**	138	**C414_333.4 P71 BN71A4**	139
4.0	537	1.9	326.1	10000			**C514_326.1 P71 BN71A4**	143
4.2	511	0.9	318.9	6500	**C364_318.9 S05 M05C4**	134	**C364_318.9 P71 BN71A4**	139
4.3	501	1.2	304.2	7000	**C414_304.2 S05 M05C4**	138	**C414_304.2 P71 BN71A4**	139
4.4	490	2.0	297.8	10000			**C514_297.8 P71 BN71A4**	143
4.6	466	1.0	290.9	6500	**C364_290.9 S05 M05C4**	134	**C364_290.9 P71 BN71A4**	139
5.0	434	2.3	263.8	10000			**C514_263.8 P71 BN71A4**	143
5.0	433	1.4	263.0	7000	**C414_263.0 S05 M05C4**	138	**C414_263.0 P71 BN71A4**	139
5.3	409	1.1	255.0	6500	**C364_255.0 S05 M05C4**	134	**C364_255.0 P71 BN71A4**	139
5.5	395	1.5	239.9	7000	**C414_239.9 S05 M05C4**	138	**C414_239.9 P71 BN71A4**	139
5.8	370	1.2	230.9	6500	**C364_230.9 S05 M05C4**	134	**C364_230.9 P71 BN71A4**	139
6.3	350	2.9	216.7	10000			**C513_216.7 P71 BN71A4**	143
6.5	342	1.3	206.4	6500	**C363_206.4 S05 M05C4**	134	**C363_206.4 P71 BN71A4**	135
7.2	308	1.9	190.8	7000			**C413_190.8 P71 BN71A4**	139
7.2	308	1.0	186.0	5500	**C323_186.0 S05 M05C4**	130	**C323_186.0 P71 BN71A4**	131
7.3	304	1.5	183.5	6500	**C363_183.5 S05 M05C4**	134	**C363_183.5 P71 BN71A4**	135
8.0	277	1.1	167.4	5500	**C323_167.4 S05 M05C4**	130	**C323_167.4 P71 BN71A4**	131
8.3	268	1.7	162.0	6500	**C363_162.0 S05 M05C4**	134	**C363_162.0 P71 BN71A4**	135
8.4	265	2.3	164.1	7000			**C413_164.1 P71 BN71A4**	139
9.0	246	1.2	148.4	5500	**C323_148.4 S05 M05C4**	130	**C323_148.4 P71 BN71A4**	131
9.6	231	1.9	139.8	6500	**C363_139.8 S05 M05C4**	134	**C363_139.8 P71 BN71A4**	135
9.8	226	0.9	136.5	5000	**C223_136.5 S05 M05C4**	126	**C223_136.5 P71 BN71A4**	127
9.9	225	1.3	136.0	5500	**C323_136.0 S05 M05C4**	130	**C323_136.0 P71 BN71A4**	131
10.3	215	2.8	132.9	7000			**C413_132.9 P71 BN71A4**	139
10.7	208	2.2	125.8	6500	**C363_125.8 S05 M05C4**	134	**C363_125.8 P71 BN71A4**	135
11.0	203	1.5	122.4	5500	**C323_122.4 S05 M05C4**	130	**C323_122.4 P71 BN71A4**	131
11.0	202	1.0	122.2	5000	**C223_122.2 S05 M05C4**	126	**C223_122.2 P71 BN71A4**	127
12.0	185	1.1	112.0	5000	**C223_112.0 S05 M05C4**	126	**C223_112.0 P71 BN71A4**	127
12.0	185	2.4	111.5	6500	**C363_111.5 S05 M05C4**	134	**C363_111.5 P71 BN71A4**	135
12.1	183	1.6	110.6	5500	**C323_110.6 S05 M05C4**	130	**C323_110.6 P71 BN71A4**	131
13.0	171	1.8	103.3	5500	**C323_103.3 S05 M05C4**	130	**C323_103.3 P71 BN71A4**	131
13.1	169	2.7	102.2	6500	**C363_102.2 S05 M05C4**	134	**C363_102.2 P71 BN71A4**	135
13.4	166	1.2	100.2	5000	**C223_100.2 S05 M05C4**	126	**C223_100.2 P71 BN71A4**	127
14.2	156	1.9	94.2	5500	**C323_94.2 S05 M05C4**	130	**C323_94.2 P71 BN71A4**	131
14.6	152	3.0	91.9	6500	**C363_91.9 S05 M05C4**	134	**C363_91.9 P71 BN71A4**	135
15.1	147	1.4	88.5	5000	**C223_88.5 S05 M05C4**	126	**C223_88.5 P71 BN71A4**	127
16.2	137	1.5	82.6	5000	**C223_82.6 S05 M05C4**	126	**C223_82.6 P71 BN71A4**	127
16.2	137	2.2	82.6	5500	**C323_82.6 S05 M05C4**	130	**C323_82.6 P71 BN71A4**	131
17.9	124	1.6	74.8	5000	**C223_74.8 S05 M05C4**	126	**C223_74.8 P71 BN71A4**	127
17.9	124	2.3	74.7	5500	**C323_74.7 S05 M05C4**	130	**C323_74.7 P71 BN71A4**	131
20.1	113	1.9	66.8	5500	**C322_66.8 S05 M05C4**	130	**C322_66.8 P71 BN71A4**	131
20.3	112	0.8	66.2	2000	**C122_66.2 S05 M05C4**	122	**C122_66.2 P71 BN71A4**	123
20.5	108	1.8	65.3	5000	**C223_65.3 S05 M05C4**	126	**C223_65.3 P71 BN71A4**	127
21.2	107	1.2	63.3	5000	**C222_63.3 S05 M05C4**	126	**C222_63.3 P71 BN71A4**	127
22.3	99	1.9	60.0	5000	**C223_60.0 S05 M05C4**	126	**C223_60.0 P71 BN71A4**	127
22.6	100	2.1	59.4	5500	**C322_59.4 S05 M05C4**	130	**C322_59.4 P71 BN71A4**	131
24.3	93	1.0	55.2	2000	**C122_55.2 S05 M05C4**	122	**C122_55.2 P71 BN71A4**	123
24.5	93	1.7	54.7	5000	**C222_54.7 S05 M05C4**	126	**C222_54.7 P71 BN71A4**	127
25.6	89	3.4	52.4	5500	**C322_52.4 S05 M05C4**	130	**C322_52.4 P71 BN71A4**	131
27.5	82	1.9	48.6	5000	**C222_48.6 S05 M05C4**	126	**C222_48.6 P71 BN71A4**	127
28.1	80	1.1	47.6	2000	**C122_47.6 S05 M05C4**	122	**C122_47.6 P71 BN71A4**	123
31	73	2.6	43.3	4750	**C222_43.3 S05 M05C4**	126	**C222_43.3 P71 BN71A4**	127
32	72	1.3	42.3	2000	**C122_42.3 S05 M05C4**	122	**C122_42.3 P71 BN71A4**	123
36	63	1.4	37.0	2000	**C122_37.0 S05 M05C4**	122	**C122_37.0 P71 BN71A4**	123
36	62	3.2	36.8	4540	**C222_36.8 S05 M05C4**	126	**C222_36.8 P71 BN71A4**	127
40	56	3.6	33.1	4500	**C222_33.1 S05 M05C4**	126	**C222_33.1 P71 BN71A4**	127
41	55	1.6	32.8	2000	**C122_32.8 S05 M05C4**	122	**C122_32.8 P71 BN71A4**	123
45	50	1.8	29.5	2000	**C122_29.5 S05 M05C4**	122	**C122_29.5 P71 BN71A4**	123
49	47	1.0	27.1	700	**C052_27.1 S05 M05C4**	121		
53	43	2.1	25.4	2000	**C122_25.4 S05 M05C4**	122	**C122_25.4 P71 BN71A4**	123

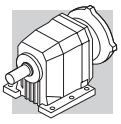

0.25 kW

n_2 min^{-1}	M_2 Nm	S	i	R_{n2} N	IE1		IEC IE1	
58	39	2.2	23.2	2000	**C122_23.2 S05 M05C4**	122	**C122_23.2 P71 BN71A4**	123
63	36	1.2	21.0	720	**C052_21.0 S05 M05C4**	121		
65	35	2.4	20.6	2000	**C122_20.6 S05 M05C4**	122	**C122_20.6 P71 BN71A4**	123
70	33	1.2	18.9	710	**C052_18.9 S05 M05C4**	121		
73	31	2.5	18.4	2000	**C122_18.4 S05 M05C4**	122	**C122_18.4 P71 BN71A4**	123
78	29	2.6	17.2	2000	**C122_17.2 S05 M05C4**	122	**C122_17.2 P71 BN71A4**	123
85	27	1.5	15.6	700	**C052_15.6 S05 M05C4**	121		
87	26	2.8	15.4	2000	**C122_15.4 S05 M05C4**	122	**C122_15.4 P71 BN71A4**	123
100	23	3.1	13.4	2000	**C122_13.4 S05 M05C4**	122	**C122_13.4 P71 BN71A4**	123
106	22	1.9	12.5	690	**C052_12.5 S05 M05C4**	121		
113	20	3.3	11.9	2000	**C122_11.9 S05 M05C4**	122	**C122_11.9 P71 BN71A4**	123
118	19	2.1	11.2	670	**C052_11.2 S05 M05C4**	121		
133	17	3.7	10.1	1980	**C122_10.1 S05 M05C4**	122	**C122_10.1 P71 BN71A4**	123
142	16	1.9	9.3	650	**C052_9.3 S05 M05C4**	121		
157	14	4.2	17.2	1870	**C122_17.2 S05 M05B2**	122	**C122_17.2 P63 BN63B2**	123
178	13	2.4	7.4	620	**C052_7.4 S05 M05C4**	121		
197	12	2.6	6.7	610	**C052_6.7 S05 M05C4**	121		
204	11	5.0	13.4	1710	**C122_13.4 S05 M05B2**	122	**C122_13.4 P63 BN63B2**	123
230	10	5.4	11.9	1660	**C122_11.9 S05 M05B2**	122	**C122_11.9 P63 BN63B2**	123
240	9	3.2	5.5	580	**C052_5.5 S05 M05C4**	121		
268	8	5.8	10.1	1590	**C122_10.1 S05 M05B2**	122	**C122_10.1 P63 BN63B2**	123
311	7	6.5	8.8	1510	**C122_8.8 S05 M05B2**	122	**C122_8.8 P63 BN63B2**	123
354	6	7.0	7.6	1460	**C122_7.6 S05 M05B2**	122	**C122_7.6 P63 BN63B2**	123
442	5	8.2	6.2	1350	**C122_6.2 S05 M05B2**	122	**C122_6.2 P63 BN63B2**	123
489	5	8.6	5.6	1290	**C122_5.6 S05 M05B2**	122	**C122_5.6 P63 BN63B2**	123
577	4	9.7	4.9	1240	**C122_4.9 S05 M05B2**	122	**C122_4.9 P63 BN63B2**	123
637	4	10.1	4.3	1180	**C122_4.3 S05 M05B2**	122	**C122_4.3 P63 BN63B2**	123
770	3	11.5	3.7	1130	**C122_3.7 S05 M05B2**	122	**C122_3.7 P63 BN63B2**	123
856	3	12.1	3.2	1080	**C122_3.2 S05 M05B2**	122	**C122_3.2 P63 BN63B2**	123
979	2	13.0	2.8	1030	**C122_2.8 S05 M05B2**	122	**C122_2.8 P63 BN63B2**	123

0.37 kW

n_2 min^{-1}	M_2 Nm	S	i	R_{n2} N	IE1		IEC IE1	
0.73	4382	1.6	1240	60000	**C904_1240 S1 M1LA6**	156	**C904_1240 P80 BN80A6**	157
0.78	4127	1.0	1168	35000			**C804_1168 P80 BN80A6**	154
0.93	3476	1.2	1481	35000			**C804_1481 P71 BN71B4**	154
1.2	2741	1.5	1168	35000			**C804_1168 P71 BN71B4**	154
1.4	2220	1.8	945.7	35000			**C804_945.7 P71 BN71B4**	154
1.5	2165	1.1	922.6	25000			**C704_922.6 P71 BN71B4**	151
1.7	1869	0.9	796.1	16000	**C614_796.1 S1 M1SD4**	146	**C614_796.1 P71 BN71B4**	147
2.0	1570	1.0	668.8	16000	**C614_668.8 S1 M1SD4**	146	**C614_668.8 P71 BN71B4**	147
2.1	1543	1.5	657.3	25000			**C704_657.3 P71 BN71B4**	151
2.4	1341	1.2	571.2	16000	**C614_571.2 S1 M1SD4**	146	**C614_571.2 P71 BN71B4**	147
2.5	1302	1.8	554.7	25000			**C704_554.7 P71 BN71B4**	151
2.5	1290	0.8	549.7	10000	**C514_549.7 S1 M1SD4**	142	**C514_549.7 P71 BN71B4**	143
2.6	1223	1.3	521.1	16000	**C614_521.1 S1 M1SD4**	146	**C614_521.1 P71 BN71B4**	147
3.3	989	1.6	421.5	16000	**C614_421.5 S1 M1SD4**	146	**C614_421.5 P71 BN71B4**	147
3.3	976	1.0	415.7	10000	**C514_415.7 S1 M1SD4**	142	**C514_415.7 P71 BN71B4**	143
3.3	961	2.4	409.4	25000			**C704_409.4 P71 BN71B4**	151
3.6	891	1.1	379.6	10000	**C514_379.6 S1 M1SD4**	142	**C514_379.6 P71 BN71B4**	143
3.7	869	1.8	370.1	16000	**C614_370.1 S1 M1SD4**	146	**C614_370.1 P71 BN71B4**	147
4.1	793	2.0	337.7	16000	**C614_337.7 S1 M1SD4**	146	**C614_337.7 P71 BN71B4**	147
4.1	783	0.8	333.4	7000	**C414_333.4 S1 M1SD4**	138	**C414_333.4 P71 BN71B4**	139
4.2	765	1.3	326.1	10000	**C514_326.1 S1 M1SD4**	142	**C514_326.1 P71 BN71B4**	143
4.6	699	1.4	297.8	10000	**C514_297.8 S1 M1SD4**	142	**C514_297.8 P71 BN71B4**	143
5.2	619	1.6	263.8	10000	**C514_263.8 S1 M1SD4**	142	**C514_263.8 P71 BN71B4**	143
5.2	617	1.0	263.0	7000	**C414_263.0 S1 M1SD4**	138	**C414_263.0 P71 BN71B4**	139
5.9	540	0.8	230.9	6300	**C364_230.9 S1 M1SD4**	134	**C364_230.9 P71 BN71B4**	139
6.3	520	1.9	216.7	10000	**C513_216.7 S1 M1SD4**	142	**C513_216.7 P71 BN71B4**	143

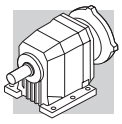

0.37 kW

n_2 min^{-1}	M_2 Nm	S	i	R_{n2} N	IE1		IEC IE1	
6.6	502	1.2	209.1	7000	**C413_209.1 S1 M1SD4**	138	**C413_209.1 P71 BN71B4**	139
6.6	499	0.9	206.4	6500	**C363_206.4 S1 M1SD4**	134	**C363_206.4 P71 BN71B4**	135
6.9	475	2.1	197.9	10000	**C513_197.9 S1 M1SD4**	142	**C513_197.9 P71 BN71B4**	143
7.2	458	1.3	190.8	7000	**C413_190.8 S1 M1SD4**	138	**C413_190.8 P71 BN71B4**	139
7.5	444	1.0	183.5	6500	**C363_183.5 S1 M1SD4**	134	**C363_183.5 P71 BN71B4**	135
7.6	431	1.4	179.9	7000	**C413_179.9 S1 M1SD4**	138	**C413_179.9 P71 BN71B4**	139
7.8	422	2.4	175.8	10000	**C513_175.8 S1 M1SD4**	142	**C513_175.8 P71 BN71B4**	143
8.3	394	1.5	164.1	7000	**C413_164.1 S1 M1SD4**	138	**C413_164.1 P71 BN71B4**	139
8.5	385	2.6	160.5	10000	**C513_160.5 S1 M1SD4**	142	**C513_160.5 P71 BN71B4**	143
8.5	392	1.1	162.0	6500	**C363_162.0 S1 M1SD4**	134	**C363_162.0 P71 BN71B4**	135
9.4	349	1.7	145.6	7000	**C413_145.6 S1 M1SD4**	138	**C413_145.6 P71 BN71B4**	139
9.8	338	1.3	139.8	6500	**C363_139.8 S1 M1SD4**	134	**C363_139.8 P71 BN71B4**	135
10.1	329	0.9	136.0	5500	**C323_136.0 S1 M1SD4**	130	**C323_136.0 P71 BN71B4**	131
10.3	319	1.9	132.9	7000	**C413_132.9 S1 M1SD4**	138	**C413_132.9 P71 BN71B4**	139
10.9	304	1.5	125.8	6500	**C363_125.8 S1 M1SD4**	134	**C363_125.8 P71 BN71B4**	135
11.2	296	1.0	122.4	5500	**C323_122.4 S1 M1SD4**	130	**C323_122.4 P71 BN71B4**	131
11.4	289	2.1	120.6	7000	**C413_120.6 S1 M1SD4**	138	**C413_120.6 P71 BN71B4**	139
12.3	270	1.7	111.5	6500	**C363_111.5 S1 M1SD4**	134	**C363_111.5 P71 BN71B4**	135
12.4	264	2.3	110.1	7000	**C413_110.1 S1 M1SD4**	138	**C413_110.1 P71 BN71B4**	139
12.4	267	1.1	110.6	5500	**C323_110.6 S1 M1SD4**	130	**C323_110.6 P71 BN71B4**	131
13.3	250	1.2	103.3	5500	**C323_103.3 S1 M1SD4**	130	**C323_103.3 P71 BN71B4**	131
13.4	245	2.4	102.3	7000	**C413_102.3 S1 M1SD4**	138	**C413_102.3 P71 BN71B4**	139
13.4	247	1.8	102.2	6500	**C363_102.2 S1 M1SD4**	134	**C363_102.2 P71 BN71B4**	135
14.5	228	1.3	94.2	5500	**C323_94.2 S1 M1SD4**	130	**C323_94.2 P71 BN71B4**	131
14.7	224	2.7	93.3	7000	**C413_93.3 S1 M1SD4**	138	**C413_93.3 P71 BN71B4**	139
14.9	222	2.0	91.9	6500	**C363_91.9 S1 M1SD4**	134	**C363_91.9 P71 BN71B4**	135
15.5	214	0.9	88.5	4850	**C223_88.5 S1 M1SD4**	126	**C223_88.5 P71 BN71B4**	127
16.5	201	2.2	83.1	6500	**C363_83.1 S1 M1SD4**	134	**C363_83.1 P71 BN71B4**	135
16.6	200	1.0	82.6	5000	**C223_82.6 S1 M1SD4**	126	**C223_82.6 P71 BN71B4**	127
16.6	200	1.5	82.6	5500	**C323_82.6 S1 M1SD4**	130	**C323_82.6 P71 BN71B4**	131
16.8	196	3.1	81.5	7000	**C413_81.5 S1 M1SD4**	138	**C413_81.5 P71 BN71B4**	139
17.7	188	2.4	77.6	6500	**C363_77.6 S1 M1SD4**	134	**C363_77.6 P71 BN71B4**	135
18.3	181	1.1	74.8	5000	**C223_74.8 S1 M1SD4**	126	**C223_74.8 P71 BN71B4**	127
18.3	181	1.6	74.7	5500	**C323_74.7 S1 M1SD4**	130	**C323_74.7 P71 BN71B4**	131
18.4	178	3.4	74.4	7000	**C413_74.4 S1 M1SD4**	138	**C413_74.4 P71 BN71B4**	139
19.4	171	2.6	70.8	6500	**C363_70.8 S1 M1SD4**	134	**C363_70.8 P71 BN71B4**	135
20.5	165	1.3	66.8	5500	**C322_66.8 S1 M1SD4**	130	**C322_66.8 P71 BN71B4**	131
21.0	158	1.3	65.3	5000	**C223_65.3 S1 M1SD4**	126	**C223_65.3 P71 BN71B4**	127
21.7	156	0.8	63.3	4850	**C222_63.3 S1 M1SD4**	126	**C222_63.3 P71 BN71B4**	127
22.1	150	3.0	62.0	6500	**C363_62.0 S1 M1SD4**	134	**C363_62.0 P71 BN71B4**	135
22.8	145	1.3	60.0	5000	**C223_60.0 S1 M1SD4**	126	**C223_60.0 P71 BN71B4**	127
23.1	147	1.5	59.4	5500	**C322_59.4 S1 M1SD4**	130	**C322_59.4 P71 BN71B4**	131
25.0	135	1.1	54.7	5000	**C222_54.7 S1 M1SD4**	126	**C222_54.7 P71 BN71B4**	127
26.1	130	2.3	52.4	5500	**C322_52.4 S1 M1SD4**	130	**C322_52.4 P71 BN71B4**	131
28.2	120	1.3	48.6	4850	**C222_48.6 S1 M1SD4**	126	**C222_48.6 P71 BN71B4**	127
30	112	2.7	45.3	5500	**C322_45.3 S1 M1SD4**	130	**C322_45.3 P71 BN71B4**	131
32	107	1.8	43.3	4530	**C222_43.3 S1 M1SD4**	126	**C222_43.3 P71 BN71B4**	127
34	101	3.0	40.7	5500	**C322_40.7 S1 M1SD4**	130	**C322_40.7 P71 BN71B4**	131
37	91	1.0	37.0	2000	**C122_37.0 S1 M1SD4**	122	**C122_37.0 P71 BN71B4**	123
37	91	2.2	36.8	4360	**C222_36.8 S1 M1SD4**	126	**C222_36.8 P71 BN71B4**	127
38	89	3.4	36.1	5500	**C322_36.1 S1 M1SD4**	130	**C322_36.1 P71 BN71B4**	131
41	82	2.4	33.1	4240	**C222_33.1 S1 M1SD4**	126	**C222_33.1 P71 BN71B4**	127
42	81	1.1	32.8	2000	**C122_32.8 S1 M1SD4**	122	**C122_32.8 P71 BN71B4**	123
46	73	2.7	29.6	4130	**C222_29.6 S1 M1SD4**	126	**C222_29.6 P71 BN71B4**	127
46	73	1.2	29.5	2000	**C122_29.5 S1 M1SD4**	122	**C122_29.5 P71 BN71B4**	123
50	67	3.0	27.2	4100	**C222_27.2 S1 M1SD4**	126	**C222_27.2 P71 BN71B4**	127
54	63	1.4	25.4	2000	**C122_25.4 S1 M1SD4**	122	**C122_25.4 P71 BN71B4**	123
56	60	3.3	24.3	3920	**C222_24.3 S1 M1SD4**	126	**C222_24.3 P71 BN71B4**	127
59	57	1.5	23.2	2000	**C122_23.2 S1 M1SD4**	122	**C122_23.2 P71 BN71B4**	123
66	51	1.6	20.6	2000	**C122_20.6 S1 M1SD4**	122	**C122_20.6 P71 BN71B4**	123
74	45	1.7	18.4	2000	**C122_18.4 S1 M1SD4**	122	**C122_18.4 P71 BN71B4**	123
80	42	1.8	17.2	2000	**C122_17.2 S1 M1SD4**	122	**C122_17.2 P71 BN71B4**	123
88	39	1.0	15.6	580	**C052_15.6 S1 M1SD4**	121		
89	38	1.9	15.4	2000	**C122_15.4 S1 M1SD4**	122	**C122_15.4 P71 BN71B4**	123
102	33	2.1	13.4	2000	**C122_13.4 S1 M1SD4**	122	**C122_13.4 P71 BN71B4**	123

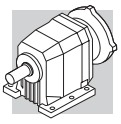

0.37 kW

n_2 min-1	M_2 Nm	S	i	R_{n2} N	IE1		IEC IE1	
110	31	1.3	12.5	600	**C052_12.5 S1 M1SD4**	121		
115	29	2.3	11.9	2000	**C122_11.9 S1 M1SD4**	122	**C122_11.9 P71 BN71B4**	123
122	28	1.4	11.2	590	**C052_11.2 S1 M1SD4**	121		
136	25	2.5	10.1	1930	**C122_10.1 S1 M1SD4**	122	**C122_10.1 P71 BN71B4**	123
147	23	1.3	9.3	580	**C052_9.3 S1 M1SD4**	121		
155	22	2.7	8.8	1850	**C122_8.8 S1 M1SD4**	122	**C122_8.8 P71 BN71B4**	123
164	20	2.2	5.5	570	**C052_5.5 S1 M1LA6**	121		
180	19	3.0	7.6	1780	**C122_7.6 S1 M1SD4**	122	**C122_7.6 P71 BN71B4**	123
185	18	1.6	7.4	570	**C052_7.4 S1 M1SD4**	121		
204	17	1.8	6.7	560	**C052_6.7 S1 M1SD4**	121		
220	15	3.4	6.2	1650	**C122_6.2 S1 M1SD4**	122	**C122_6.2 P71 BN71B4**	123
235	14	3.7	11.9	1610	**C122_11.9 S05 M05C2**	122	**C122_11.9 P71 BN71A2**	123
249	14	2.2	5.5	540	**C052_5.5 S1 M1SD4**	121		
273	12	4.0	10.1	1570	**C122_10.1 S05 M05C2**	122	**C122_10.1 P71 BN71A2**	123
318	11	4.5	8.8	1500	**C122_8.8 S05 M05C2**	122	**C122_8.8 P71 BN71A2**	123
361	9	4.8	7.6	1440	**C122_7.6 S05 M05C2**	122	**C122_7.6 P71 BN71A2**	123
452	7	5.7	6.2	1350	**C122_6.2 S05 M05C2**	122	**C122_6.2 P71 BN71A2**	123
500	7	6.0	5.6	1290	**C122_5.6 S05 M05C2**	122	**C122_5.6 P71 BN71A2**	123
577	6	6.5	4.9	1230	**C122_4.9 S05 M05C2**	122	**C122_4.9 P71 BN71A2**	123
651	5	7.0	4.3	1180	**C122_3.2 S05 M05C2**	122	**C122_3.2 P71 BN71A2**	123
770	4	7.8	3.7	1120	**C122_3.7 S05 M05C2**	122	**C122_3.7 P71 BN71A2**	123
875	4	8.4	3.2	1080	**C122_3.2 S05 M05C2**	122	**C122_3.2 P71 BN71A2**	123
1015	3	9.1	2.8	1030	**C122_2.8 S05 M05C2**	122	**C122_2.8 P71 BN71A2**	123

0.55 kW

n_2 min-1	M_2 Nm	S	i	R_{n2} N	IE1		IEC IE1	
0.74	6442	1.1	1240	60000	**C904_1240 S2 M2SA6**	156	**C904_1240 P80 BN80B6**	157
0.85	5616	2.1	1081	85000	**C1004_1081 S2 M2SA6**	159	**C1004_1081 P80 BN80B6**	160
1.0	4792	1.5	922.3	60000	**C904_922.3 S2 M2SA6**	156	**C904_922.3 P80 BN80B6**	157
1.1	4381	0.9	1274	35000	**C804_1274 S1 M1LA4**	153	**C804_1274 P80 BN80A4**	154
1.1	4295	1.7	1240	60000	**C904_1240 S1 M1LA4**	156	**C904_1240 P80 BN80A4**	157
1.3	3549	1.1	1032	35000	**C804_1032 S1 M1LA4**	153	**C804_1032 P80 BN80A4**	154
1.4	3484	2.1	1006	60000	**C904_1006 S1 M1LA4**	156	**C904_1006 P80 BN80A4**	157
1.6	2939	1.4	854.6	35000	**C804_854.6 S1 M1LA4**	153	**C804_854.6 P80 BN80A4**	154
1.6	2923	2.5	844.0	65000	**C904_844.0 S1 M1LA4**	156	**C904_844.0 P80 BN80A4**	157
1.9	2531	0.9	736.0	25000	**C704_736.0 S1 M1LA4**	150	**C704_736.0 P80 BN80A4**	151
1.9	2492	1.6	724.7	35000	**C804_724.7 S1 M1LA4**	153	**C804_724.7 P80 BN80A4**	154
2.1	2284	1.8	664.3	35000	**C804_664.3 S1 M1LA4**	153	**C804_664.3 P80 BN80A4**	154
2.1	2260	1.0	657.3	25000	**C704_657.3 S1 M1LA4**	150	**C704_657.3 P80 BN80A4**	151
2.4	1978	0.8	571.2	16000	**C614_571.2 S1 M1LA4**	146	**C614_571.2 P80 BN80A4**	147
2.5	1907	1.2	554.7	25000	**C704_554.7 S1 M1LA4**	150	**C704_554.7 P80 BN80A4**	151
2.6	1820	2.2	529.3	35000	**C804_529.3 S1 M1LA4**	153	**C804_529.3 P80 BN80A4**	154
3.0	1600	1.0	462.0	16000	**C614_462.0 S1 M1LA4**	146	**C614_462.0 P80 BN80A4**	147
3.1	1566	2.6	455.4	35000	**C804_455.4 S1 M1LA4**	153	**C804_455.4 P80 BN80A4**	154
3.1	1525	1.5	443.5	25000	**C704_443.5 S1 M1LA4**	150	**C704_443.5 P80 BN80A4**	151
3.3	1460	1.1	421.5	16000	**C614_421.5 S1 M1LA4**	146	**C614_421.5 P80 BN80A4**	147
3.6	1315	0.8	379.6	10000	**C514_379.6 S1 M1LA4**	142	**C514_379.6 P80 BN80A4**	143
3.7	1282	1.2	370.1	16000	**C614_370.1 S1 M1LA4**	146	**C614_370.1 P80 BN80A4**	147
3.8	1254	3.2	364.7	35000	**C804_364.7 S1 M1LA4**	153	**C804_364.7 P80 BN80A4**	154
4.0	1184	1.9	344.3	25000	**C704_344.3 S1 M1LA4**	150	**C704_344.3 P80 BN80A4**	151
4.1	1170	1.4	337.7	16000	**C614_337.7 S1 M1LA4**	146	**C614_337.7 P80 BN80A4**	147
4.2	1130	0.9	326.1	10000	**C514_326.1 S1 M1LA4**	142	**C514_326.1 P80 BN80A4**	143
4.6	1031	1.0	297.8	10000	**C514_297.8 S1 M1LA4**	142	**C514_297.8 P80 BN80A4**	143
5.0	953	1.7	275.3	16000	**C614_275.3 S1 M1LA4**	146	**C614_275.3 P80 BN80A4**	147
5.1	936	2.5	272.2	25000	**C704_272.2 S1 M1LA4**	150	**C704_272.2 P80 BN80A4**	151
5.2	914	1.1	263.8	10000	**C514_263.8 S1 M1LA4**	142	**C514_263.8 P80 BN80A4**	143
5.7	834	1.2	240.9	10000	**C514_240.9 S1 M1LA4**	142	**C514_240.9 P80 BN80A4**	143
5.8	847	2.7	239.3	25000			**C703_239.3 P80 BN80A4**	151
5.8	825	1.9	238.3	16000	**C614_238.3 S1 M1LA4**	146	**C614_238.3 P80 BN80A4**	147

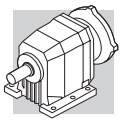

0.55 kW

n_2 min-1	M_2 Nm	S	i	R_{n2} N	IE1		IEC IE1	
6.2	782	2.9	220.9	25000			**C703_220.9 P80 BN80A4**	151
6.3	753	2.1	217.4	16000	**C614_217.4 S1 M1LA4**	146	**C614_217.4 P80 BN80A4**	147
6.4	767	1.3	216.7	10000	**C513_216.7 S1 M1LA4**	142	**C513_216.7 P80 BN80A4**	143
7.0	700	1.4	197.9	10000	**C513_197.9 S1 M1LA4**	142	**C513_197.9 P80 BN80A4**	143
7.0	693	2.3	195.8	16000			**C613_195.8 P80 BN80A4**	146
7.1	687	3.3	194.1	25000			**C703_194.1 P80 BN80A4**	151
7.7	637	0.9	179.9	7000	**C413_179.9 S1 M1LA4**	138	**C413_179.9 P80 BN80A4**	139
7.7	632	2.5	178.6	16000			**C613_178.6 P80 BN80A4**	146
7.9	622	1.6	175.8	10000	**C513_175.8 S1 M1LA4**	142	**C513_175.8 P80 BN80A4**	143
8.4	582	2.7	164.5	16000			**C613_164.5 P80 BN80A4**	146
8.4	581	1.0	164.1	7000	**C413_164.1 S1 M1LA4**	138	**C413_164.1 P80 BN80A4**	139
8.6	568	1.8	160.5	10000	**C513_160.5 S1 M1LA4**	142	**C513_160.5 P80 BN80A4**	143
9.2	531	3.0	150.0	16000			**C613_150.0 P80 BN80A4**	146
9.4	522	1.9	147.4	10000	**C513_147.4 S1 M1LA4**	142	**C513_147.4 P80 BN80A4**	143
9.5	516	1.2	145.6	7000	**C413_145.6 S1 M1LA4**	138	**C413_145.6 P80 BN80A4**	139
9.8	497	3.2	140.5	16000			**C613_140.5 P80 BN80A4**	146
9.9	494	0.9	139.8	6500	**C363_139.8 S1 M1LA4**	134	**C363_139.8 P80BN80A4**	135
10.3	477	2.1	134.6	10000	**C513_134.6 S1 M1LA4**	142	**C513_134.6 P80 BN80A4**	143
10.4	470	1.3	132.9	7000	**C413_132.9 S1 M1LA4**	138	**C413_132.9 P80 BN80A4**	139
11.0	445	1.0	125.8	6500	**C363_125.8 S1 M1LA4**	134	**C363_125.8 P80BN80A4**	135
11.1	440	2.3	124.4	10000	**C513_124.4 S1 M1LA4**	142	**C513_124.4 P80 BN80A4**	143
11.4	427	1.4	120.6	7000	**C413_120.6 S1 M1LA4**	138	**C413_120.6 P80 BN80A4**	139
12.1	402	2.5	113.6	10000	**C513_113.6 S1 M1LA4**	142	**C513_113.6 P80 BN80A4**	143
12.4	394	1.1	111.5	6500	**C363_111.5 S1 M1LA4**	134	**C363_111.5 P80BN80A4**	135
12.5	390	1.5	110.1	7000	**C413_110.1 S1 M1LA4**	138	**C413_110.1 P80 BN80A4**	139
13.5	362	1.7	102.3	7000	**C413_102.3 S1 M1LA4**	138	**C413_102.3 P80 BN80A4**	139
13.5	361	1.2	102.2	6500	**C363_102.2 S1 M1LA4**	134	**C363_102.2 P80BN80A4**	135
13.6	360	2.8	101.8	10000	**C513_101.8 S1 M1LA4**	142	**C513_101.8 P80 BN80A4**	143
14.7	333	0.9	94.2	5500	**C323_94.2 S1 M1LA4**	130	**C323_94.2 P80BN80A4**	131
14.8	330	1.8	93.3	7000	**C413_93.3 S1 M1LA4**	138	**C413_93.3 P80 BN80A4**	139
14.8	329	3.0	93.0	10000	**C513_93.0 S1 M1LA4**	142	**C513_93.0 P80 BN80A4**	143
15.0	325	1.4	91.9	6500	**C363_91.9 S1 M1LA4**	134	**C363_91.9 P80BN80A4**	135
16.6	294	1.5	83.1	6500	**C363_83.1 S1 M1LA4**	134	**C363_83.1 P80BN80A4**	135
16.7	292	1.0	82.6	5500	**C323_82.6 S1 M1LA4**	130	**C323_82.6 P80BN80A4**	131
16.9	289	2.1	81.5	7000	**C413_81.5 S1 M1LA4**	138	**C413_81.5 P80 BN80A4**	139
17.5	284	1.1	52.4	5500	**C322_52.4 S2 M2SA6**	130	**C322_52.4 P80 BN80B6**	131
17.8	274	1.6	77.6	6500	**C363_77.6 S1 M1LA4**	134	**C363_77.6 P80BN80A4**	135
18.5	264	1.1	74.7	5500	**C323_74.7 S1 M1LA4**	130	**C323_74.7 P80BN80A4**	131
18.6	263	2.3	74.4	7000	**C413_74.4 S1 M1LA4**	138	**C413_74.4 P80 BN80A4**	139
19.5	250	1.8	70.8	6500	**C363_70.8 S1 M1LA4**	134	**C363_70.8 P80BN80A4**	135
20.7	241	0.9	66.8	5500	**C322_66.8 S1 M1LA4**	130	**C322_66.8 P80BN80A4**	131
21.5	228	2.6	64.3	7000	**C413_64.3 S1 M1LA4**	138	**C413_64.3 P80 BN80A4**	139
22.2	219	2.1	62.0	6500	**C363_62.0 S1 M1LA4**	134	**C363_62.0 P80BN80A4**	135
22.6	221	1.4	40.7	5500	**C322_40.7 S2 M2SA6**	130	**C322_40.7 P80 BN80B6**	131
23.0	212	0.9	60.0	4280	**C223_60.0 S1 M1LA4**	126	**C223_60.0 P80BN80A4**	127
23.2	214	1.0	59.4	5500	**C322_59.4 S1 M1LA4**	130	**C322_59.4 P80BN80A4**	131
23.5	208	2.9	58.7	7000	**C413_58.7 S1 M1LA4**	138	**C413_58.7 P80 BN80A4**	139
24.6	198	2.3	56.2	6500	**C363_56.2 S1 M1LA4**	134	**C363_56.2 P80BN80A4**	135
26.3	189	1.6	52.4	5500	**C322_52.4 S1 M1LA4**	130	**C322_52.4 P80BN80A4**	131
26.8	182	3.3	51.5	7000	**C413_51.5 S1 M1LA4**	138	**C413_51.5 P80 BN80A4**	139
27.8	180	1.1	33.1	4270	**C222_33.1 S2 M2SA6**	126	**C222_33.1 P80 BN80B6**	127
28.7	170	2.6	48.2	6500	**C363_48.2 S1 M1LA4**	134	**C363_48.2 P80BN80A4**	135
30	163	1.8	45.3	5500	**C322_45.3 S1 M1LA4**	130	**C322_45.3 P80BN80A4**	131
31	162	3.1	44.8	7000	**C412_44.8 S1 M1LA4**	138	**C412_44.8 P80 BN80A4**	139
32	154	2.9	43.5	6500	**C363_43.5 S1 M1LA4**	134	**C363_43.5 P80BN80A4**	135
32	156	1.2	43.3	4190	**C222_43.3 S1 M1LA4**	126	**C222_43.3 P80BN80A4**	127
34	147	2.0	40.7	5500	**C322_40.7 S1 M1LA4**	130	**C322_40.7 P80BN80A4**	131
36	135	3.3	38.1	6500	**C363_38.1 S1 M1LA4**	134	**C363_38.1 P80BN80A4**	135
38	133	1.5	36.8	4070	**C222_36.8 S1 M1LA4**	126	**C222_36.8 P80BN80A4**	127
38	130	2.3	36.1	5500	**C322_36.1 S1 M1LA4**	130	**C322_36.1 P80BN80A4**	131
42	119	1.7	33.1	3970	**C222_33.1 S1 M1LA4**	126	**C222_33.1 P80BN80A4**	127
42	119	2.5	33.1	5500	**C322_33.1 S1 M1LA4**	130	**C322_33.1 P80BN80A4**	131
46	107	2.8	29.8	5500	**C322_29.8 S1 M1LA4**	130	**C322_29.8 P80BN80A4**	131
47	107	1.9	29.6	3890	**C222_29.6 S1 M1LA4**	126	**C222_29.6 P80BN80A4**	127
47	106	0.8	29.5	1820	**C122_29.5 S1 M1LA4**	122	**C122_29.5 P80BN80A4**	123

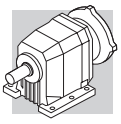

0.55 kW

n_2 min-1	M_2 Nm	S	i	R_{n2} N	IE1		IEC IE1	
51	98	2.0	27.2	3860	**C222_27.2 S1 M1LA4**	126	**C222_27.2 P80BN80A4**	127
51	97	3.1	26.9	5500	**C322_26.9 S1 M1LA4**	130	**C322_26.9 P80BN80A4**	131
54	92	1.0	25.4	2000	**C122_25.4 S1 M1LA4**	122	**C122_25.4 P80BN80A4**	123
55	91	3.3	25.1	5500	**C322_25.1 S1 M1LA4**	130	**C322_25.1 P80BN80A4**	131
57	88	2.3	24.3	3720	**C222_24.3 S1 M1LA4**	126	**C222_24.3 P80BN80A4**	127
59	84	1.0	23.2	2000	**C122_23.2 S1 M1LA4**	122	**C122_23.2 P80BN80A4**	123
64	77	2.5	21.5	3700	**C222_21.5 S1 M1LA4**	126	**C222_21.5 P80BN80A4**	127
67	74	1.1	20.6	2000	**C122_20.6 S1 M1LA4**	122	**C122_20.6 P80BN80A4**	123
69	72	2.6	20.0	3560	**C222_20.0 S1 M1LA4**	126	**C222_20.0 P80BN80A4**	127
75	66	1.2	18.4	2000	**C122_18.4 S1 M1LA4**	122	**C122_18.4 P80BN80A4**	123
76	65	2.8	18.1	3500	**C222_18.1 S1 M1LA4**	126	**C222_18.1 P80BN80A4**	127
80	62	1.2	17.2	2000	**C122_17.2 S1 M1LA4**	122	**C122_17.2 P80BN80A4**	123
87	57	3.1	15.8	3350	**C222_15.8 S1 M1LA4**	126	**C222_15.8 P80BN80A4**	127
89	56	1.3	15.4	2000	**C122_15.4 S1 M1LA4**	122	**C122_15.4 P80BN80A4**	123
95	53	3.2	14.5	3300	**C222_14.5 S1 M1LA4**	126	**C222_14.5 P80BN80A4**	127
103	48	1.4	13.4	1990	**C122_13.4 S1 M1LA4**	122	**C122_13.4 P80BN80A4**	123
116	43	1.6	11.9	1920	**C122_11.9 S1 M1LA4**	122	**C122_11.9 P80BN80A4**	123
121	41	1.6	7.6	1910	**C122_7.6 S2 M2SA6**	122	**C122_7.6 P80 BN80B6**	123
123	40	1.0	11.2	480	**C052_11.2 S1 M1LA4**	121		
137	36	1.7	10.1	1850	**C122_10.1 S1 M1LA4**	122	**C122_10.1 P80BN80A4**	123
151	33	3.3	6.1	2860	**C222_6.1 S2 M2SA6**	126	**C222_6.1 P80 BN80B6**	127
156	32	1.9	8.8	1780	**C122_8.8 S1 M1LA4**	122	**C122_8.8 P80BN80A4**	123
181	28	2.0	7.6	1720	**C122_7.6 S1 M1LA4**	122	**C122_7.6 P80BN80A4**	123
186	27	1.1	7.4	460	**C052_7.4 S1 M1LA4**	121		
206	24	1.2	6.7	450	**C052_6.7 S1 M1LA4**	121		
221	22	2.4	6.2	1590	**C122_6.2 S1 M1LA4**	122	**C122_6.2 P80BN80A4**	123
237	21	2.5	11.9	1580	**C122_11.9 S1 M1SD2**	122	**C122_11.9 P71 BN71B2**	123
246	20	2.5	5.6	1540	**C122_5.6 S1 M1LA4**	122	**C122_5.6 P80BN80A4**	123
251	20	1.5	5.5	430	**C052_5.5 S1 M1LA4**	121		
279	18	2.7	10.1	1530	**C122_10.1 S1 M1SD2**	122	**C122_10.1 P71 BN71B2**	123
283	18	2.7	4.9	1490	**C122_4.9 S1 M1LA4**	122	**C122_4.9 P80BN80A4**	123
320	16	3.0	8.8	1470	**C122_8.8 S1 M1SD2**	122	**C122_8.8 P71 BN71B2**	123
320	16	2.9	4.3	1420	**C122_4.3 S1 M1LA4**	122	**C122_4.3 P80BN80A4**	123
369	14	3.3	7.6	1410	**C122_7.6 S1 M1SD2**	122	**C122_7.6 P71 BN71B2**	123
378	13	3.2	3.7	1370	**C122_3.7 S1 M1LA4**	122	**C122_3.7 P80BN80A4**	123
451	11	3.8	6.2	1300	**C122_6.2 S1 M1SD2**	122	**C122_6.2 P71 BN71B2**	123
504	10	4.0	5.6	1260	**C122_5.6 S1 M1SD2**	122	**C122_5.6 P71 BN71B2**	123
577	9	4.4	4.9	1210	**C122_4.9 S1 M1SD2**	122	**C122_4.9 P71 BN71B2**	123
656	8	4.7	4.3	1170	**C122_4.3 S1 M1SD2**	122	**C122_4.3 P71 BN71B2**	123
770	6	5.2	3.7	1110	**C122_3.7 S1 M1SD2**	122	**C122_3.7 P71 BN71B2**	123
881	6	5.7	3.2	990	**C122_3.2 S1 M1SD2**	122	**C122_3.2 P71 BN71B2**	123
1007	5	6.1	2.8	950	**C122_2.8 S1 M1SD2**	122	**C122_2.8 P71 BN71B2**	123

0.75 kW

n_2 min-1	M_2 Nm	S	i	R_{n2} N	IE2		IEC IE2	
0.86	7413	1.6	1081	85000	**C1004_1081 S3 ME3SA6**	159	**C1004_1081 P90 BE90S6**	160
0.93	6973	1.0	1006	60000	**C904_1006 S3 ME3SA6**	156	**C904_1006 P90 BE90S6**	157
1.2	5582	1.3	1240	60000	**C904_1240 S2 ME2SB4**	156	**C904_1240 P80 BE80B4**	157
1.3	5117	1.4	1137	60000	**C904_1137 S2 ME2SB4**	156	**C904_1137 P80 BE80B4**	157
1.3	4865	2.5	1081	85000	**C1004_1081 S2 ME2SB4**	159	**C1004_1081 P80 BE80B4**	160
1.4	4528	1.6	1006	60000	**C904_1006 S2 ME2SB4**	156	**C904_1006 P80 BE80B4**	157
1.4	4517	2.7	1004	85000	**C1004_1004 S2 ME2SB4**	159	**C1004_1004 P80 BE80B4**	160
1.5	4256	0.9	945.7	35000	**C804_945.7 S2 ME2SB4**	153	**C804_945.7 P80 BE80B4**	154
1.6	4150	1.7	922.3	60000	**C904_922.3 S2 ME2SB4**	156	**C904_922.3 P80 BE80B4**	157
1.6	4087	2.9	908.2	85000	**C1004_908.2 S2 ME2SB4**	159	**C1004_908.2 P80 BE80B4**	160
1.7	3846	1.0	854.6	35000	**C804_854.6 S2 ME2SB4**	153	**C804_854.6 P80 BE80B4**	154
1.7	3798	1.9	844.0	6000	**C904_844.0 S2 ME2SB4**	156	**C904_844.0 P80 BE80B4**	157
1.8	3525	1.1	783.4	35000	**C804_783.4 S2 ME2SB4**	153	**C804_783.4 P80 BE80B4**	154
1.8	3481	2.1	773.6	60000	**C904_773.6 S2 ME2SB4**	156	**C904_773.6 P80 BE80B4**	157
2.0	3261	1.2	724.7	35000	**C804_724.7 S2 ME2SB4**	153	**C804_724.7 P80 BE80B4**	154
2.0	3205	2.2	712.2	60000	**C904_712.2 S2 ME2SB4**	156	**C904_712.2 P80 BE80B4**	157

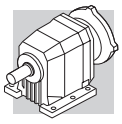

0.75 kW

n_2 min-1	M_2 Nm	S	i	R_{n2} N	IE2		IEC IE2	
2.2	2989	1.3	664.3	35000	**C804_664.3 S2 ME2SB4**	153	**C804_664.3 P80 BE80B4**	154
2.2	2938	2.5	652.8	60000	**C904_652.8 S2 ME2SB4**	156	**C904_652.8 P80 BE80B4**	157
2.5	2623	2.7	582.8	60000	**C904_582.8 S2 ME2SB4**	156	**C904_582.8 P80 BE80B4**	157
2.5	2598	1.5	577.4	35000	**C804_577.4 S2 ME2SB4**	153	**C804_577.4 P80 BE80B4**	154
2.6	2496	0.9	554.7	25000	**C704_554.7 S2 ME2SB4**	150	**C704_554.7 P80 BE80B4**	151
2.7	2404	3.0	534.2	60000	**C904_534.2 S2 ME2SB4**	156	**C904_534.2 P80 BE80B4**	157
2.7	2382	1.7	529.3	35000	**C804_529.3 S2 ME2SB4**	153	**C804_529.3 P80 BE80B4**	154
2.8	2304	1.0	512.0	25000	**C704_512.0 S2 ME2SB4**	150	**C704_512.0 P80 BE80B4**	151
3.1	2049	2.0	455.4	35000	**C804_455.4 S2 ME2SB4**	153	**C804_455.4 P80 BE80B4**	154
3.2	1996	1.2	443.5	25000	**C704_443.5 S2 ME2SB4**	150	**C704_443.5 P80 BE80B4**	151
3.4	1897	0.8	421.5	16000	**C614_421.5 S2 ME2SB4**	146	**C614_421.5 P80 BE80B4**	147
3.4	1879	2.1	417.5	35000	**C804_417.5 S2 ME2SB4**	153	**C804_417.5 P80 BE80B4**	154
3.5	1842	1.2	409.4	25000	**C704_409.4 S2 ME2SB4**	150	**C704_409.4 P80 BE80B4**	151
3.9	1666	1.0	370.1	16000	**C614_370.1 S2 ME2SB4**	146	**C614_370.1 P80 BE80B4**	147
3.9	1696	1.4	239.3	25000	**C703_239.3 S3 ME3SA6**	150	**C703_239.3 P90 BE90S6**	151
3.9	1641	2.4	364.7	35000	**C804_364.7 S2 ME2SB4**	153	**C804_364.7 P80 BE80B4**	154
4.2	1550	1.5	344.3	25000	**C704_344.3 S2 ME2SB4**	150	**C704_344.3 P80 BE80B4**	151
4.2	1520	1.1	337.7	16000	**C614_337.7 S2 ME2SB4**	146	**C614_337.7 P80 BE80B4**	147
4.3	1504	2.7	334.3	35000	**C804_334.3 S2 ME2SB4**	153	**C804_334.3 P80 BE80B4**	154
4.3	1529	2.6	215.8	35000	**C803_215.8 S3 ME3SA6**	153	**C803_215.8 P90 BE90S6**	154
4.5	1430	1.6	317.9	25000	**C704_317.9 S2 ME2SB4**	150	**C704_317.9 P80 BE80B4**	151
4.7	1358	1.2	301.7	16000	**C614_301.7 S2 ME2SB4**	146	**C614_301.7 P80 BE80B4**	147
4.8	1387	1.2	195.8	16000	**C613_195.8 S3 ME3SA6**	146	**C613_195.8 P90 BE90S6**	147
5.2	1239	1.3	275.3	16000	**C614_275.3 S2 ME2SB4**	146	**C614_275.3 P80 BE80B4**	147
5.2	1265	1.3	178.6	16000	**C613_178.6 S3 ME3SA6**	146	**C613_178.6 P90 BE90S6**	147
5.3	1225	1.9	272.2	25000	**C704_272.2 S2 ME2SB4**	150	**C704_272.2 P80 BE80B4**	151
5.4	1187	0.8	263.8	10000	**C514_263.8 S2 ME2SB4**	142	**C514_263.8 P80 BE80B4**	143
5.7	1165	1.4	164.5	16000	**C613_164.5 S3 ME3SA6**	146	**C613_164.5 P90 BE90S6**	147
5.7	1131	2.0	251.3	25000	**C704_251.3 S2 ME2SB4**	150	**C704_251.3 P80 BE80B4**	151
5.9	1084	0.9	240.9	10000	**C514_240.9 S2 ME2SB4**	142	**C514_240.9 P80 BE80B4**	143
6.0	1113	2.1	239.3	25000	**C703_239.3 S2 ME2SB4**	150	**C703_239.3 P80 BE80B4**	151
6.0	1072	1.5	238.3	16000	**C614_238.3 S2 ME2SB4**	146	**C614_238.3 P80 BE80B4**	147
6.5	1027	2.2	220.9	25000	**C703_220.9 S2 ME2SB4**	150	**C703_220.9 P80 BE80B4**	151
6.6	978	1.6	217.4	16000	**C614_217.4 S2 ME2SB4**	146	**C614_217.4 P80 BE80B4**	147
6.6	1008	1.0	216.7	10000	**C513_216.7 S2 ME2SB4**	142	**C513_216.7 P80 BE80B4**	143
7.2	920	1.1	197.9	10000	**C513_197.9 S2 ME2SB4**	142	**C513_197.9 P80 BE80B4**	143
7.3	881	1.8	195.8	16000	**C613_195.8 S2 ME2SB4**	146	**C613_195.8 P80 BE80B4**	147
7.4	903	2.5	194.1	25000	**C703_194.1 S2 ME2SB4**	150	**C703_194.1 P80 BE80B4**	151
8.0	833	2.8	179.2	25000	**C703_179.2 S2 ME2SB4**	150	**C703_179.2 P80 BE80B4**	151
8.0	804	2.0	178.6	16000	**C613_178.6 S2 ME2SB4**	146	**C613_178.6 P80 BE80B4**	147
8.1	817	1.2	175.8	10000	**C513_175.8 S2 ME2SB4**	142	**C513_175.8 P80 BE80B4**	143
8.7	740	2.2	164.5	16000	**C613_164.5 S2 ME2SB4**	146	**C613_164.5 P80 BE80B4**	147
8.8	757	3.0	162.8	25000	**C703_162.8 S2 ME2SB4**	150	**C703_162.8 P80 BE80B4**	151
8.9	746	1.3	160.5	10000	**C513_160.5 S2 ME2SB4**	142	**C513_160.5 P80 BE80B4**	143
9.5	675	2.4	150.0	16000	**C613_150.0 S2 ME2SB4**	146	**C613_150.0 P80 BE80B4**	147
9.7	686	1.5	147.4	10000	**C513_147.4 S2 ME2SB4**	142	**C513_147.4 P80 BE80B4**	143
10.2	632	2.5	140.5	16000	**C613_140.5 S2 ME2SB4**	146	**C613_140.5 P80 BE80B4**	147
10.6	626	1.6	134.6	10000	**C513_134.6 S2 ME2SB4**	142	**C513_134.6 P80 BE80B4**	143
10.8	618	1.0	132.9	7000	**C413_132.9 S2 ME2SB4**	138	**C413_132.9 P80 BE80B4**	139
11.2	577	2.8	128.1	16000	**C613_128.1 S2 ME2SB4**	146	**C613_128.1 P80 BE80B4**	147
11.5	579	1.7	124.4	10000	**C513_124.4 S2 ME2SB4**	142	**C513_124.4 P80 BE80B4**	143
11.9	561	1.1	120.6	7000	**C413_120.6 S2 ME2SB4**	138	**C413_120.6 P80 BE80B4**	139
12.6	511	3.1	113.6	16000	**C613_113.6 S2 ME2SB4**	146	**C613_113.6 P80 BE80B4**	147
12.6	528	1.9	113.6	10000	**C513_113.6 S2 ME2SB4**	142	**C513_113.6 P80 BE80B4**	143
13.0	512	1.2	110.1	7000	**C413_110.1 S2 ME2SB4**	138	**C413_110.1 P80 BE80B4**	139
13.8	466	3.4	103.6	16000	**C613_103.6 S2 ME2SB4**	146	**C613_103.6 P80 BE80B4**	147
14.0	476	1.3	102.3	7000	**C413_102.3 S2 ME2SB4**	138	**C413_102.3 P80 BE80B4**	139
14.0	475	0.9	102.2	6500	**C363_102.2 S2 ME2SB4**	134	**C363_102.2 P80 BE80B4**	135
14.0	473	2.1	101.8	10000	**C513_101.8 S2 ME2SB4**	142	**C513_101.8 P80 BE80B4**	143
15.3	434	1.4	93.3	7000	**C413_93.3 S2 ME2SB4**	138	**C413_93.3 P80 BE80B4**	139
15.4	432	2.3	93.0	10000	**C513_93.0 S2 ME2SB4**	142	**C513_93.0 P80 BE80B4**	143
15.6	427	1.1	91.9	6500	**C363_91.9 S2 ME2SB4**	134	**C363_91.9 P80 BE80B4**	135
17.2	387	1.2	83.1	6500	**C363_83.1 S2 ME2SB4**	134	**C363_83.1 P80 BE80B4**	135
17.5	379	1.6	81.5	7000	**C413_81.5 S2 ME2SB4**	138	**C413_81.5 P80 BE80B4**	139
17.9	371	2.7	79.9	10000	**C513_79.9 S2 ME2SB4**	142	**C513_79.9 P80 BE80B4**	143
18.4	361	1.2	77.6	6500	**C363_77.6 S2 ME2SB4**	134	**C363_77.6 P80 BE80B4**	135
19.2	346	1.7	74.4	7000	**C413_74.4 S2 ME2SB4**	138	**C413_74.4 P80 BE80B4**	139
19.6	339	2.9	72.9	10000	**C513_72.9 S2 ME2SB4**	142	**C513_72.9 P80 BE80B4**	143
20.2	329	1.4	70.8	6500	**C363_70.8 S2 ME2SB4**	134	**C363_70.8 P80 BE80B4**	135

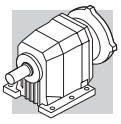

0.75 kW

n_2 min-1	M_2 Nm	S	i	R_{n2} N	IE2		IEC IE2	
22.1	300	3.3	64.6	10000	**C513_64.6 S2 ME2SB4**	142	**C513_64.6 P80 BE80B4**	143
22.2	299	2.0	64.3	7000	**C413_64.3 S2 ME2SB4**	138	**C413_64.3 P80 BE80B4**	139
23.0	295	1.0	40.7	5500	**C322_40.7 S3 ME3SA6**	130	**C322_40.7 P90 BE90S6**	131
23.1	288	1.6	62.0	6500	**C363_62.0 S2 ME2SB4**	134	**C363_62.0 P80 BE80B4**	135
24.4	273	2.2	58.7	7000	**C413_58.7 S2 ME2SB4**	138	**C413_58.7 P80 BE80B4**	139
25.1	271	2.9	57.0	10000	**C512_57.0 S2 ME2SB4**	142	**C512_57.0 P80 BE80B4**	143
25.5	261	1.7	56.2	6500	**C363_56.2 S2 ME2SB4**	134	**C363_56.2 P80 BE80B4**	135
27.3	249	1.2	52.4	5500	**C322_52.4 S2 ME2SB4**	130	**C322_52.4 P80 BE80B4**	131
27.8	239	2.5	51.5	7000	**C413_51.5 S2 ME2SB4**	138	**C413_51.5 P80 BE80B4**	139
27.8	244	2.9	51.4	10000	**C512_51.4 S2 ME2SB4**	142	**C512_51.4 P80 BE80B4**	143
29.7	224	2.0	48.2	6500	**C363_48.2 S2 ME2SB4**	134	**C363_48.2 P80 BE80B4**	135
29.9	227	3.5	47.8	10000	**C512_47.8 S2 ME2SB4**	142	**C512_47.8 P80 BE80B4**	143
30	218	2.7	47.0	7000	**C413_47.0 S2 ME2SB4**	138	**C413_47.0 P80 BE80B4**	139
32	215	1.4	45.3	5500	**C322_45.3 S2 ME2SB4**	130	**C322_45.3 P80 BE80B4**	131
32	213	2.4	44.8	7000	**C412_44.8 S2 ME2SB4**	138	**C412_44.8 P80 BE80B4**	139
33	202	2.2	43.5	6500	**C363_43.5 S2 ME2SB4**	134	**C363_43.5 P80 BE80B4**	135
33	206	0.9	43.3	3810	**C222_43.3 S2 ME2SB4**	126	**C222_43.3 P80 BE80B4**	127
35	193	1.6	40.7	5500	**C322_40.7 S2 ME2SB4**	130	**C322_40.7 P80 BE80B4**	131
38	177	2.5	38.1	6500	**C363_38.1 S2 ME2SB4**	134	**C363_38.1 P80 BE80B4**	135
39	176	2.8	37.1	7000	**C412_37.1 S2 ME2SB4**	138	**C412_37.1 P80 BE80B4**	139
39	175	1.1	36.8	3750	**C222_36.8 S2 ME2SB4**	126	**C222_36.8 P80 BE80B4**	127
40	171	1.7	36.1	5500	**C322_36.1 S2 ME2SB4**	130	**C322_36.1 P80 BE80B4**	131
41	161	2.8	34.6	6500	**C363_34.6 S2 ME2SB4**	134	**C363_34.6 P80 BE80B4**	135
43	159	3.2	33.4	7000	**C412_33.4 S2 ME2SB4**	138	**C412_33.4 P80 BE80B4**	139
43	157	1.3	33.1	3680	**C222_33.1 S2 ME2SB4**	126	**C222_33.1 P80 BE80B4**	127
43	157	1.9	33.1	5500	**C322_33.1 S2 ME2SB4**	130	**C322_33.1 P80 BE80B4**	131
48	141	2.1	29.8	5500	**C322_29.8 S2 ME2SB4**	130	**C322_29.8 P80 BE80B4**	131
48	141	1.4	29.6	3630	**C222_29.6 S2 ME2SB4**	126	**C222_29.6 P80 BE80B4**	127
50	134	3.4	28.7	6490	**C363_28.7 S2 ME2SB4**	134	**C363_28.7 P80 BE80B4**	135
53	129	1.6	27.2	3600	**C222_27.2 S2 ME2SB4**	126	**C222_27.2 P80 BE80B4**	127
53	128	2.3	26.9	5500	**C322_26.9 S2 ME2SB4**	130	**C322_26.9 P80 BE80B4**	131
57	119	2.5	25.1	5460	**C322_25.1 S2 ME2SB4**	130	**C322_25.1 P80 BE80B4**	131
59	115	1.7	24.3	3510	**C222_24.3 S2 ME2SB4**	126	**C222_24.3 P80 BE80B4**	127
62	109	2.7	22.9	5300	**C322_22.9 S2 ME2SB4**	130	**C322_22.9 P80 BE80B4**	131
67	102	1.9	21.5	3480	**C222_21.5 S2 ME2SB4**	126	**C222_21.5 P80 BE80B4**	127
71	95	3.1	20.1	5150	**C322_20.1 S2 ME2SB4**	130	**C322_20.1 P80 BE80B4**	131
71	95	2.0	20.0	3380	**C222_20.0 S2 ME2SB4**	126	**C222_20.0 P80 BE80B4**	127
79	86	2.1	18.1	3350	**C222_18.1 S2 ME2SB4**	126	**C222_18.1 P80 BE80B4**	127
83	82	0.9	17.2	1750	**C122_17.2 S2 ME2SB4**	122	**C122_17.2 P80 BE80B4**	123
90	75	2.3	15.8	3210	**C222_15.8 S2 ME2SB4**	126	**C222_15.8 P80 BE80B4**	127
93	73	1.0	15.4	1920	**C122_15.4 S2 ME2SB4**	122	**C122_15.4 P80 BE80B4**	123
98	69	2.4	14.5	3200	**C222_14.5 S2 ME2SB4**	126	**C222_14.5 P80 BE80B4**	127
107	64	1.1	13.4	1870	**C122_13.4 S2 ME2SB4**	122	**C122_13.4 P80 BE80B4**	123
115	59	2.7	12.4	3030	**C222_12.4 S2 ME2SB4**	126	**C222_12.4 P80 BE80B4**	127
120	56	1.2	11.9	1780	**C122_11.9 S2 ME2SB4**	122	**C122_11.9 P80 BE80B4**	123
129	53	2.9	11.1	2980	**C222_11.1 S2 ME2SB4**	126	**C222_11.1 P80 BE80B4**	127
142	48	1.3	10.1	1760	**C122_10.1 S2 ME2SB4**	122	**C122_10.1 P80 BE80B4**	123
148	46	3.2	9.6	2840	**C222_9.6 S2 ME2SB4**	126	**C222_9.6 P80 BE80B4**	127
162	42	1.4	8.8	1700	**C122_8.8 S2 ME2SB4**	122	**C122_8.8 P80 BE80B4**	123
165	41	3.4	8.7	2760	**C222_8.7 S2 ME2SB4**	126	**C222_8.7 P80 BE80B4**	127
188	36	1.5	7.6	1650	**C122_7.6 S2 ME2SB4**	122	**C122_7.6 P80 BE80B4**	123
229	30	1.8	6.2	1530	**C122_6.2 S2 ME2SB4**	122	**C122_6.2 P80 BE80B4**	123
240	28	2.4	11.9	1520	**C122_11.9 S2 ME2SA2**	122	**C122_11.9 P80 BE80A2**	123
255	27	1.9	5.6	1470	**C122_5.6 S2 ME2SB4**	122	**C122_5.6 P80 BE80B4**	123
283	24	2.6	10.1	1490	**C122_10.1 S2 ME2SA2**	122	**C122_10.1 P80 BE80A2**	123
294	23	2.1	4.9	1440	**C122_4.9 S2 ME2SB4**	122	**C122_4.9 P80 BE80B4**	123
323	21	2.8	8.8	1420	**C122_8.8 S2 ME2SA2**	122	**C122_8.8 P80 BE80A2**	123
332	20	2.2	4.3	1370	**C122_4.3 S2 ME2SB4**	122	**C122_4.3 P80 BE80B4**	123
374	18	3.1	7.6	1380	**C122_7.6 S2 ME2SA2**	122	**C122_7.6 P80 BE80A2**	123
392	17	2.4	3.7	1330	**C122_3.7 S2 ME2SB4**	122	**C122_3.7 P80 BE80B4**	123
446	15	2.6	3.2	1280	**C122_3.2 S2 ME2SB4**	122	**C122_3.2 P80 BE80B4**	123
457	15	3.6	6.2	1280	**C122_6.2 S2 ME2SA2**	122	**C122_6.2 P80 BE80A2**	123
509	13	3.8	5.6	1240	**C122_5.6 S2 ME2SA2**	122	**C122_5.6 P80 BE80A2**	123
517	13	2.8	2.8	1230	**C122_2.8 S2 ME2SB4**	122	**C122_2.8 P80 BE80B4**	123
585	12	4.1	4.9	1190	**C122_4.9 S2 ME2SA2**	122	**C122_4.9 P80 BE80A2**	123
661	10	4.4	4.3	1050	**C122_4.3 S2 ME2SA2**	122	**C122_4.3 P80 BE80A2**	123
781	9	4.8	3.7	1090	**C122_3.7 S2 ME2SA2**	122	**C122_3.7 P80 BE80A2**	123
889	8	5.2	3.2	1050	**C122_3.2 S2 ME2SA2**	122	**C122_3.2 P80 BE80A2**	123
1030	7	5.6	2.8	1010	**C122_2.8 S2 ME2SA2**	122	**C122_2.8 P80 BE80A2**	123

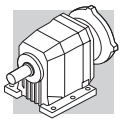

1.1 kW

n_2 min-1	M_2 Nm	S	i	R_{n2} N	IE2		IEC IE2	
0.87	10815	1.1	1081	85000	**C1004_1081 S3 ME3LA6**	159	**C1004_1081 P100 BE100M6**	160
0.94	10043	1.2	1004	85000	**C1004_908.2 S3 ME3LA6**	159	**C1004_908.2 P100 BE100M6**	160
1.3	7573	1.0	1137	60000	**C904_1137 S3 ME3SA4**	156	**C904_1137 P90 BE90S4**	157
1.3	7200	1.7	1081	85000	**C1004_1081 S3 ME3SA4**	159	**C1004_1081 P90 BE90S4**	160
1.4	6701	1.1	1006	60000	**C904_1006 S3 ME3SA4**	156	**C904_1006 P90 BE90S4**	157
1.4	6686	1.8	1004	85000	**C1004_1004 S3 ME3SA4**	159	**C1004_1004 P90 BE90S4**	160
1.6	6143	1.2	922.3	60000	**C904_922.3 S3 ME3SA4**	156	**C904_922.3 P90 BE90S4**	157
1.6	6049	2.0	908.2	85000	**C1004_908.2 S3 ME3SA4**	159	**C1004_908.2 P90 BE90S4**	160
1.7	5621	1.3	844.0	60000	**C904_844.0 S3 ME3SA4**	156	**C904_844.0 P90 BE90S4**	157
1.7	5617	2.1	843.3	85000	**C1004_843.3 S3 ME3SA4**	159	**C1004_843.3 P90 BE90S4**	160
1.8	5166	2.3	775.7	85000	**C1004_775.7 S3 ME3SA4**	159	**C1004_775.7 P90 BE90S4**	160
1.8	5152	1.4	773.6	60000	**C904_773.6 S3 ME3SA4**	156	**C904_773.6 P90 BE90S4**	157
2.0	4797	2.5	720.3	85000	**C1004_720.3 S3 ME3SA4**	159	**C1004_720.3 P90 BE90S4**	160
2.0	4743	1.5	712.2	60000	**C904_712.2 S3 ME3SA4**	156	**C904_712.2 P90 BE90S4**	157
2.2	4424	0.9	664.3	35000	**C804_664.3 S3 ME3SA4**	153	**C804_664.3 P90 BE90S4**	154
2.2	4348	1.7	652.8	60000	**C904_652.8 S3 ME3SA4**	156	**C904_652.8 P90 BE90S4**	157
2.3	4179	2.9	627.4	85000	**C1004_627.4 S3 ME3SA4**	159	**C1004_627.4 P90 BE90S4**	160
2.5	3881	1.9	582.8	60000	**C904_582.8 S3 ME3SA4**	156	**C904_582.8 P90 BE90S4**	157
2.5	3845	1.0	577.4	35000	**C804_577.4 S3 ME3SA4**	153	**C804_577.4 P90 BE90S4**	154
2.7	3558	2.0	534.2	60000	**C904_534.2 S3 ME3SA4**	156	**C904_534.2 P90 BE90S4**	157
2.7	3525	1.1	529.3	35000	**C804_529.3 S3 ME3SA4**	153	**C804_529.3 P90 BE90S4**	154
3.1	3045	2.4	457.1	60000	**C904_457.1 S3 ME3SA4**	156	**C904_457.1 P90 BE90S4**	157
3.1	3033	1.3	455.4	35000	**C804_455.4 S3 ME3SA4**	153	**C804_455.4 P90 BE90S4**	154
3.4	2791	2.6	419.0	60000	**C904_419.0 S3 ME3SA4**	156	**C904_419.0 P90 BE90S4**	157
3.4	2780	1.4	417.5	35000	**C804_417.5 S3 ME3SA4**	153	**C804_417.5 P90 BE90S4**	154
3.9	2463	2.9	369.8	60000	**C904_369.8 S3 ME3SA4**	156	**C904_369.8 P90 BE90S4**	157
3.9	2429	1.6	364.7	35000	**C804_364.7 S3 ME3SA4**	153	**C804_364.7 P90 BE90S4**	154
4.2	2293	1.0	344.3	25000	**C704_344.3 S3 ME3SA4**	150	**C704_344.3 P90 BE90S4**	151
4.3	2226	1.8	334.3	35000	**C804_334.3 S3 ME3SA4**	153	**C804_334.3 P90 BE90S4**	154
4.5	2117	1.1	317.9	25000	**C704_317.9 S3 ME3SA4**	150	**C704_317.9 P90 BE90S4**	151
4.7	2010	0.8	301.7	16000	**C614_301.7 S3 ME3SA4**	146	**C614_301.7 P90 BE90S4**	147
5.0	1903	2.1	285.7	35000	**C804_285.7 S3 ME3SA4**	153	**C804_285.7 P90 BE90S4**	154
5.2	1833	0.9	275.3	16000	**C614_275.3 S3 ME3SA4**	146	**C614_275.3 P90 BE90S4**	147
5.3	1813	1.3	272.2	25000	**C704_272.2 S3 ME3SA4**	150	**C704_272.2 P90 BE90S4**	151
5.5	1744	2.3	261.9	35000	**C804_261.9 S3 ME3SA4**	153	**C804_261.9 P90 BE90S4**	154
5.7	1674	1.4	251.3	25000	**C704_251.3 S3 ME3SA4**	150	**C704_251.3 P90 BE90S4**	151
5.7	1700	0.9	164.5	16000	**C613_164.5 S3 ME3LA6**	146	**C613_164.5 P100 BE100M6**	147
6.0	1647	1.4	239.3	25000	**C703_239.3 S3 ME3SA4**	150	**C703_239.3 P90 BE90S4**	151
6.0	1587	1.0	238.3	16000	**C614_238.3 S3 ME3SA4**	146	**C614_238.3 P90 BE90S4**	147
6.3	1551	1.0	150.0	16000	**C613_150.0 S3 ME3LA6**	146	**C613_150.0 P100 BE100M6**	147
6.5	1520	1.5	220.9	25000	**C703_220.9 S3 ME3SA4**	150	**C703_220.9 P90 BE90S4**	151
6.6	1448	1.1	217.4	16000	**C614_217.4 S3 ME3SA4**	146	**C614_217.4 P90 BE90S4**	147
6.6	1485	2.7	215.8	35000	**C803_215.8 S3 ME3SA4**	153	**C803_215.8 P90 BE90S4**	154
7.2	1362	2.8	197.9	35000	**C803_197.9 S3 ME3SA4**	153	**C803_197.9 P90 BE90S4**	154
7.3	1304	1.2	195.8	16000	**C613_195.8 S3 ME3SA4**	146	**C613_195.8 P90 BE90S4**	147
7.4	1336	1.7	194.1	25000	**C703_194.1 S3 ME3SA4**	150	**C703_194.1 P90 BE90S4**	151
8.0	1233	1.9	179.2	25000	**C703_179.2 S3 ME3SA4**	150	**C703_179.2 P90 BE90S4**	151
8.0	1189	1.3	178.6	16000	**C613_178.6 S3 ME3SA4**	146	**C613_178.6 P90 BE90S4**	147
8.5	1163	3.4	169.0	35000	**C803_169.0 S3 ME3SA4**	153	**C803_169.0 P90 BE90S4**	154
8.7	1095	1.5	164.5	16000	**C613_164.5 S3 ME3SA4**	146	**C613_164.5 P90 BE90S4**	147
8.8	1121	2.1	162.8	25000	**C703_162.8 S3 ME3SA4**	150	**C703_162.8 P90 BE90S4**	151
8.9	1105	0.9	160.5	10000	**C513_160.5 S3 ME3SA4**	142	**C513_160.5 P90 BE90S4**	143
9.5	1034	2.2	150.3	25000	**C703_150.3 S3 ME3SA4**	150	**C703_150.3 P90 BE90S4**	151
9.5	999	1.6	150.0	16000	**C613_150.0 S3 ME3SA4**	146	**C613_150.0 P90 BE90S4**	147
9.7	1015	1.0	147.4	10000	**C513_147.4 S3 ME3SA4**	142	**C513_147.4 P90 BE90S4**	143
10.2	935	1.7	140.5	16000	**C613_140.5 S3 ME3SA4**	146	**C613_140.5 P90 BE90S4**	147
10.4	946	2.4	137.4	25000	**C703_137.4 S3 ME3SA4**	150	**C703_137.4 P90 BE90S4**	151
10.6	926	1.1	134.6	10000	**C513_134.6 S3 ME3SA4**	142	**C513_134.6 P90 BE90S4**	143
11.2	853	1.9	128.1	16000	**C613_128.1 S3 ME3SA4**	146	**C613_128.1 P90 BE90S4**	147
11.3	873	2.6	126.8	25000	**C703_126.8 S3 ME3SA4**	150	**C703_126.8 P90 BE90S4**	151
11.5	856	1.2	124.4	10000	**C513_124.4 S3 ME3SA4**	142	**C513_124.4 P90 BE90S4**	143
12.6	757	2.1	113.6	16000	**C613_113.6 S3 ME3SA4**	146	**C613_113.6 P90 BE90S4**	147
12.6	782	1.3	113.6	10000	**C513_113.6 S3 ME3SA4**	142	**C513_113.6 P90 BE90S4**	143
12.7	774	3.0	112.4	25000	**C703_112.4 S3 ME3SA4**	150	**C703_112.4 P90 BE90S4**	151
13.8	690	2.3	103.6	16000	**C613_103.6 S3 ME3SA4**	146	**C613_103.6 P90 BE90S4**	147

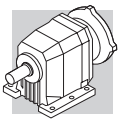

1.1 kW

n_2 min-1	M_2 Nm	S	i	R_{n2} N	IE2		IEC IE2	
14.0	701	1.4	101.8	10000	**C513_101.8 S3 ME3SA4**	142	**C513_101.8 P90 BE90S4**	143
15.3	642	0.9	93.3	7000	**C413_93.3 S3 ME3SA4**	138	**C413_93.3 P90 BE90S4**	139
15.4	640	1.6	93.0	10000	**C513_93.0 S3 ME3SA4**	142	**C513_93.0 P90 BE90S4**	143
15.7	606	2.6	91.0	16000	**C613_91.0 S3 ME3SA4**	146	**C613_91.0 P90 BE90S4**	147
17.2	553	2.9	83.0	16000	**C613_83.0 S3 ME3SA4**	146	**C613_83.0 P90 BE90S4**	147
17.5	561	1.1	81.5	7000	**C413_81.5 S3 ME3SA4**	138	**C413_81.5 P90 BE90S4**	139
17.9	550	1.8	79.9	10000	**C513_79.9 S3 ME3SA4**	142	**C513_79.9 P90 BE90S4**	143
19.2	512	1.2	74.4	7000	**C413_74.4 S3 ME3SA4**	138	**C413_74.4 P90 BE90S4**	139
19.3	494	3.2	74.2	16000	**C613_74.2 S3 ME3SA4**	146	**C613_74.2 P90 BE90S4**	147
19.6	502	2.0	72.9	10000	**C513_72.9 S3 ME3SA4**	142	**C513_72.9 P90 BE90S4**	143
20.2	487	0.9	70.8	6500	**C363_70.8 S3 ME3SA4**	134	**C363_70.8 P90 BE90S4**	135
21.1	451	3.5	67.7	16000	**C613_67.7 S3 ME3SA4**	146	**C613_67.7 P90 BE90S4**	147
22.1	445	2.2	64.6	10000	**C513_64.6 S3 ME3SA4**	142	**C513_64.6 P90 BE90S4**	143
22.2	442	1.4	64.3	7000	**C413_64.3 S3 ME3SA4**	138	**C413_64.3 P90 BE90S4**	139
23.1	427	1.1	62.0	6500	**C363_62.0 S3 ME3SA4**	134	**C363_62.0 P90 BE90S4**	135
24.2	406	2.5	59.0	10000	**C513_59.0 S3 ME3SA4**	142	**C513_59.0 P90 BE90S4**	143
24.4	404	1.5	58.7	7000	**C413_58.7 S3 ME3SA4**	138	**C413_58.7 P90 BE90S4**	139
25.1	401	2.0	57.0	10000	**C512_57.0 S3 ME3SA4**	142	**C512_57.0 P90 BE90S4**	143
25.5	387	1.2	56.2	6500	**C363_56.2 S3 ME3SA4**	134	**C363_56.2 P90 BE90S4**	135
27.8	354	1.7	51.5	7000	**C413_51.5 S3 ME3SA4**	138	**C413_51.5 P90 BE90S4**	139
27.8	361	1.9	51.4	10000	**C512_51.4 S3 ME3SA4**	142	**C512_51.4 P90 BE90S4**	143
27.9	352	2.8	51.2	10000	**C513_51.2 S3 ME3SA4**	142	**C513_51.2 P90 BE90S4**	143
29.7	331	1.4	48.2	6500	**C363_48.2 S3 ME3SA4**	134	**C363_48.2 P90 BE90S4**	135
29.9	336	2.4	47.8	10000	**C512_47.8 S3 ME3SA4**	142	**C512_47.8 P90 BE90S4**	143
30	323	1.9	47.0	7000	**C413_47.0 S3 ME3SA4**	138	**C413_47.0 P90 BE90S4**	139
31	322	3.1	46.7	10000	**C513_46.7 S3 ME3SA4**	142	**C513_46.7 P90 BE90S4**	143
32	318	0.9	45.3	5500	**C322_45.3 S3 ME3SA4**	130	**C322_45.3 P90 BE90S4**	131
32	315	1.6	44.8	7000	**C412_44.8 S3 ME3SA4**	138	**C412_44.8 P90 BE90S4**	139
33	299	1.5	43.5	6500	**C363_43.5 S3 ME3SA4**	134	**C363_43.5 P90 BE90S4**	135
33	303	2.5	43.1	10000	**C512_43.1 S3 ME3SA4**	142	**C512_43.1 P90 BE90S4**	143
35	286	1.0	40.7	5500	**C322_40.7 S3 ME3SA4**	130	**C322_40.7 P90 BE90S4**	131
35	284	2.8	40.4	10000	**C512_40.4 S3 ME3SA4**	142	**C512_40.4 P90 BE90S4**	143
35	278	2.2	40.3	7000	**C413_40.3 S3 ME3SA4**	138	**C413_40.3 P90 BE90S4**	139
38	262	1.7	38.1	6500	**C363_38.1 S3 ME3SA4**	134	**C363_38.1 P90 BE90S4**	135
39	261	1.9	37.1	7000	**C412_37.1 S3 ME3SA4**	138	**C412_37.1 P90 BE90S4**	139
39	256	3.1	36.4	10000	**C512_36.4 S3 ME3SA4**	142	**C512_36.4 P90 BE90S4**	143
40	254	1.2	36.1	5500	**C322_36.1 S3 ME3SA4**	130	**C322_36.1 P90 BE90S4**	131
41	238	1.9	34.6	6300	**C363_34.6 S3 ME3SA4**	134	**C363_34.6 P90 BE90S4**	135
43	235	2.1	33.4	7000	**C412_33.4 S3 ME3SA4**	138	**C412_33.4 P90 BE90S4**	139
43	233	1.3	33.1	5420	**C322_33.1 S3 ME3SA4**	130	**C322_33.1 P90 BE90S4**	131
45	221	2.3	31.4	7000	**C412_31.4 S3 ME3SA4**	138	**C412_31.4 P90 BE90S4**	139
48	209	1.4	29.8	5360	**C322_29.8 S3 ME3SA4**	130	**C322_29.8 P90 BE90S4**	131
48	208	1.0	29.6	3190	**C222_29.6 S3 ME3SA4**	126	**C222_29.6 P90 BE90S4**	127
50	198	2.3	28.7	6190	**C363_28.7 S3 ME3SA4**	134	**C363_28.7 P90 BE90S4**	135
51	199	2.5	28.3	7000	**C412_28.3 S3 ME3SA4**	138	**C412_28.3 P90 BE90S4**	139
53	191	1.0	27.2	3160	**C222_27.2 S3 ME3SA4**	126	**C222_27.2 P90 BE90S4**	127
53	189	1.6	26.9	5220	**C322_26.9 S3 ME3SA4**	130	**C322_26.9 P90 BE90S4**	131
55	180	2.4	26.2	5930	**C363_26.2 S3 ME3SA4**	134	**C363_26.2 P90 BE90S4**	135
57	177	1.7	25.1	5180	**C322_25.1 S3 ME3SA4**	130	**C322_25.1 P90 BE90S4**	131
57	176	2.8	25.0	6950	**C412_25.0 S3 ME3SA4**	138	**C412_25.0 P90 BE90S4**	139
59	171	1.2	24.3	3150	**C222_24.3 S3 ME3SA4**	126	**C222_24.3 P90 BE90S4**	127
62	161	1.8	22.9	5050	**C322_22.9 S3 ME3SA4**	130	**C322_22.9 P90 BE90S4**	131
63	159	3.2	22.6	6810	**C412_22.6 S3 ME3SA4**	138	**C412_22.6 P90 BE90S4**	139
65	152	2.8	22.1	5680	**C363_22.1 S3 ME3SA4**	134	**C363_22.1 P90 BE90S4**	135
67	151	1.3	21.5	3120	**C222_21.5 S3 ME3SA4**	126	**C222_21.5 P90 BE90S4**	127
71	141	2.1	20.1	4920	**C322_20.1 S3 ME3SA4**	130	**C322_20.1 P90 BE90S4**	131
71	141	1.3	20.0	3080	**C222_20.0 S3 ME3SA4**	126	**C222_20.0 P90 BE90S4**	127
75	134	2.8	19.0	5580	**C362_19.0 S3 ME3SA4**	134	**C362_19.0 P90 BE90S4**	135
79	128	2.2	18.2	4760	**C322_18.2 S3 ME3SA4**	130	**C322_18.2 P90 BE90S4**	131
79	127	1.4	18.1	3020	**C222_18.1 S3 ME3SA4**	126	**C222_18.1 P90 BE90S4**	127
83	121	3.1	17.2	5300	**C362_17.2 S3 ME3SA4**	134	**C362_17.2 P90 BE90S4**	135
90	111	1.6	15.8	2970	**C222_15.8 S3 ME3SA4**	126	**C222_15.8 P90 BE90S4**	127
92	110	2.5	15.6	4630	**C322_15.6 S3 ME3SA4**	130	**C322_15.6 P90 BE90S4**	131
98	102	1.6	14.5	2940	**C222_14.5 S3 ME3SA4**	126	**C222_14.5 P90 BE90S4**	127
102	99	2.5	14.1	4480	**C322_14.1 S3 ME3SA4**	130	**C322_14.1 P90 BE90S4**	131

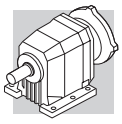

1.1 kW

n_2 min-1	M_2 Nm	S	i	R_{n2} N	IE2		IEC IE2	
115	87	1.8	12.4	2840	**C222_12.4 S3 ME3SA4**	126	**C222_12.4 P90 BE90S4**	127
116	87	2.8	12.3	4350	**C322_12.3 S3 ME3SA4**	130	**C322_12.3 P90 BE90S4**	131
128	79	2.9	11.2	4200	**C322_11.2 S3 ME3SA4**	130	**C322_11.2 P90 BE90S4**	131
129	78	2.0	11.1	2800	**C222_11.1 S3 ME3SA4**	126	**C222_11.1 P90 BE90S4**	127
142	71	0.9	10.1	1400	**C122_10.1 S3 ME3SA4**	122	**C122_10.1 P90 BE90S4**	123
148	68	2.1	9.6	2700	**C222_9.6 S3 ME3SA4**	126	**C222_9.6 P90 BE90S4**	127
154	65	3.4	9.3	4030	**C322_6.3 S3 ME3SA4**	130	**C322_6.3 P90 BE90S4**	131
162	62	1.0	8.8	1560	**C122_8.8 S3 ME3SA4**	122	**C122_8.8 P90 BE90S4**	123
165	61	2.3	8.7	2630	**C222_8.7 S3 ME3SA4**	126	**C222_8.7 P90 BE90S4**	127
188	54	1.0	7.6	1550	**C122_7.6 S3 ME3SA4**	122	**C122_7.6 P90 BE90S4**	123
202	50	2.6	7.1	2510	**C222_7.1 S3 ME3SA4**	126	**C222_7.1 P90 BE90S4**	127
229	44	1.2	6.2	1220	**C122_6.2 S3 ME3SA4**	122	**C122_6.2 P90 BE90S4**	123
235	43	2.5	6.1	2380	**C222_6.1 S3 ME3SA4**	126	**C222_6.1 P90 BE90S4**	127
238	42	1.6	11.9	1420	**C122_11.9 S2 ME2SB2**	122	**C122_11.9 P90 BE90B2**	123
255	39	3.9	11.1	2980	**C222_11.1 S2 ME2SB2**	126	**C222_11.1 P90 BE90B2**	127
255	39	1.3	5.6	1270	**C122_5.6 S3 ME3SA4**	122	**C122_5.6 P90 BE90S4**	123
256	39	2.6	5.6	2350	**C222_5.6 S3 ME3SA4**	126	**C222_5.6 P90 BE90S4**	127
259	39	1.1	3.7	1320	**C122_3.7 S3 ME3LA6**	122	**C122_3.7 P100 BE100M6**	123
281	35	1.8	10.1	1420	**C122_10.1 S2 ME2SB2**	122	**C122_10.1 P90 BE90B2**	123
294	34	1.4	4.9	1370	**C122_4.9 S3 ME3SA4**	122	**C122_4.9 P90 BE90S4**	123
300	34	3.0	4.8	2240	**C222_4.8 S3 ME3SA4**	126	**C222_4.8 P90 BE90S4**	127
320	31	1.9	8.8	1370	**C122_8.8 S2 ME2SB2**	122	**C122_8.8 P90 BE90B2**	123
332	30	1.5	4.3	1320	**C122_4.3 S3 ME3SA4**	122	**C122_4.3 P90 BE90S4**	123
336	30	3.1	4.3	2200	**C222_4.3 S3 ME3SA4**	126	**C222_4.3 P90 BE90S4**	127
341	29	1.3	2.8	1320	**C122_2.8 S3 M3SA6**	122	**C122_2.8 P90 BN90L6**	123
347	29	2.8	2.7	2160	**C222_2.7 S3 M3SA6**	126	**C222_2.7 P90 BN90L6**	127
371	27	2.1	7.6	1330	**C122_7.6 S2 ME2SB2**	122	**C122_7.6 P90 BE90B2**	123
386	26	3.5	3.7	2090	**C222_3.7 S3 ME3SA4**	126	**C222_3.7 P90 BE90S4**	127
392	26	1.6	3.7	1280	**C122_3.7 S3 ME3SA4**	122	**C122_3.7 P90 BE90S4**	123
446	23	1.8	3.2	1230	**C122_3.2 S3 ME3SA4**	122	**C122_3.2 P90 BE90S4**	123
454	22	2.4	6.2	1230	**C122_6.2 S2 ME2SB2**	122	**C122_6.2 P90 BE90B2**	123
505	20	2.6	5.6	1190	**C122_5.6 S2 ME2SB2**	122	**C122_5.6 P90 BE90B2**	123
517	19	1.9	2.8	1190	**C122_2.8 S3 ME3SA4**	122	**C122_2.8 P90 BE90S4**	123
581	17	2.8	4.9	1150	**C122_4.9 S2 ME2SB2**	122	**C122_4.9 P90 BE90B2**	123
656	15	3.0	4.3	1110	**C122_4.3 S2 ME2SB2**	122	**C122_4.3 P90 BE90B2**	123
775	13	3.3	3.7	1070	**C122_3.7 S2 ME2SB2**	122	**C122_3.7 P90 BE90B2**	123
882	11	3.5	3.2	1020	**C122_3.2 S2 ME2SB2**	122	**C122_3.2 P90 BE90B2**	123
1023	10	3.8	2.8	980	**C122_2.8 S2 ME2SB2**	122	**C122_2.8 P90 BE90B2**	123

1.5 kW

n_2 min-1	M_2 Nm	S	i	R_{n2} N	IE2		IEC IE2	
1.0	12390	1.0	908.2	85000	**C1004_908.2 S3 ME3LB6**	159	**C1004_908.2 P100 BE100LA6**	160
1.3	9730	1.2	1081	85000	**C1004_1081 S3 ME3SB4**	159	**C1004_1081 P90 BE90LA4**	160
1.4	9035	1.3	1004	85000	**C1004_1004 S3 ME3SB4**	159	**C1004_1004 P90 BE90LA4**	160
1.6	8174	1.5	908.2	85000	**C1004_908.2 S3 ME3SB4**	159	**C1004_908.2 P90 BE90LA4**	160
1.7	7596	0.9	844.0	60000	**C904_844.0 S3 ME3SB4**	156	**C904_844.0 P90 BE90LA4**	157
1.7	7590	1.6	843.3	85000	**C1004_843.3 S3 ME3SB4**	159	**C1004_843.3 P90 BE90LA4**	160
1.8	6981	1.7	775.7	85000	**C1004_775.7 S3 ME3SB4**	159	**C1004_775.7 P90 BE90LA4**	160
1.8	6963	1.0	773.6	60000	**C904_773.6 S3 ME3SB4**	156	**C904_773.6 P90 BE90LA4**	157
2.0	6483	1.9	720.3	85000	**C1004_720.3 S3 ME3SB4**	159	**C1004_720.3 P90 BE90LA4**	160
2.0	6410	1.1	712.2	60000	**C904_712.2 S3 ME3SB4**	156	**C904_712.2 P90 BE90LA4**	157
2.2	5875	1.2	652.8	60000	**C904_652.8 S3 ME3SB4**	156	**C904_652.8 P90 BE90LA4**	157
2.3	5647	2.1	627.4	85000	**C1004_627.4 S3 ME3SB4**	159	**C1004_627.4 P90 BE90LA4**	160
2.5	5245	1.4	582.8	60000	**C904_582.8 S3 ME3SB4**	156	**C904_582.8 P90 BE90LA4**	157
2.5	5243	2.3	582.6	85000	**C1004_582.6 S3 ME3SB4**	159	**C1004_582.6 P90 BE90LA4**	160
2.7	4808	1.5	534.2	60000	**C904_534.2 S3 ME3SB4**	156	**C904_534.2 P90 BE90LA4**	157
2.8	4524	2.7	502.6	85000	**C1004_502.6 S3 ME3SB4**	159	**C1004_502.6 P90 BE90LA4**	160
3.1	4201	2.9	466.7	85000	**C1004_466.7 S3 ME3SB4**	159	**C1004_466.7 P90 BE90LA4**	160

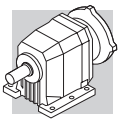

1.5 kW

n_2 min-1	M_2 Nm	S	i	R_{n2} N	IE2		IEC IE2	
3.1	4114	1.8	457.1	60000	**C904_457.1 S3 ME3SB4**	156	**C904_457.1 P90 BE90LA4**	157
3.1	4099	1.0	455.4	35000	**C804_455.4 S3 ME3SB4**	153	**C804_455.4 P90 BE90LA4**	154
3.4	3771	1.9	419.0	60000	**C904_419.0 S3 ME3SB4**	156	**C904_419.0 P90 BE90LA4**	157
3.4	3757	1.1	417.5	35000	**C804_417.5 S3 ME3SB4**	153	**C804_417.5 P90 BE90LA4**	154
3.9	3328	2.2	369.8	60000	**C904_369.8 S3 ME3SB4**	156	**C904_369.8 P90 BE90LA4**	157
3.9	3282	1.2	364.7	35000	**C804_364.7 S3 ME3SB4**	153	**C804_364.7 P90 BE90LA4**	154
4.2	3051	2.4	339.0	60000	**C904_339.0 S3 ME3SB4**	156	**C904_339.0 P90 BE90LA4**	157
4.3	3008	1.3	334.3	35000	**C804_334.3 S3 ME3SB4**	153	**C804_334.3 P90 BE90LA4**	154
4.9	2636	2.7	292.9	60000	**C904_292.9 S3 ME3SB4**	156	**C904_292.9 P90 BE90LA4**	157
5.0	2571	1.6	285.7	35000	**C804_285.7 S3 ME3SB4**	153	**C804_285.7 P90 BE90LA4**	154
5.3	2450	0.9	272.2	25000	**C704_272.2 S3 ME3SB4**	150	**C704_272.2 P90 BE90LA4**	151
5.3	2416	3.0	268.5	60000	**C904_268.5 S3 ME3SB4**	156	**C904_268.5 P90 BE90LA4**	157
5.5	2357	1.7	261.9	35000	**C804_261.9 S3 ME3SB4**	153	**C804_261.9 P90 BE90LA4**	154
5.7	2262	1.0	251.3	25000	**C704_251.3 S3 ME3SB4**	150	**C704_251.3 P90 BE90LA4**	151
6.0	2226	1.0	239.3	25000	**C703_239.3 S3 ME3SB4**	150	**C703_239.3 P90 BE90LA4**	151
6.5	2054	1.1	220.9	25000	**C703_220.9 S3 ME3SB4**	150	**C703_220.9 P90 BE90LA4**	151
6.6	1957	0.8	217.4	16000	**C614_217.4 S3 ME3SB4**	146	**C614_217.4 P90 BE90LA4**	147
6.6	2007	2.0	215.8	35000	**C803_215.8 S3 ME3SB4**	153	**C803_215.8 P90 BE90LA4**	154
7.2	1840	2.1	197.9	35000	**C803_197.9 S3 ME3SB4**	153	**C803_197.9 P90 BE90LA4**	154
7.3	1762	0.9	195.8	16000	**C613_195.8 S3 ME3SB4**	146	**C613_195.8 P90 BE90LA4**	147
7.4	1805	1.3	194.1	25000	**C703_194.1 S3 ME3SB4**	150	**C703_194.1 P90 BE90LA4**	151
7.8	1715	2.3	184.4	35000	**C803_184.4 S3 ME3SB4**	153	**C803_184.4 P90 BE90LA4**	154
8.0	1666	1.4	179.2	25000	**C703_179.2 S3 ME3SB4**	150	**C703_179.2 P90 BE90LA4**	151
8.0	1607	1.0	178.6	16000	**C613_178.6 S3 ME3SB4**	146	**C613_178.6 P90 BE90LA4**	147
8.5	1572	2.5	169.0	35000	**C803_169.0 S3 ME3SB4**	153	**C803_169.0 P90 BE90LA4**	154
8.7	1480	1.1	164.5	16000	**C613_164.5 S3 ME3SB4**	146	**C613_164.5 P90 BE90LA4**	147
8.8	1514	1.5	162.8	25000	**C703_162.8 S3 ME3SB4**	150	**C703_162.8 P90 BE90LA4**	151
9.5	1398	1.6	150.3	25000	**C703_150.3 S3 ME3SB4**	150	**C703_150.3 P90 BE90LA4**	151
9.5	1350	1.2	150.0	16000	**C613_150.0 S3 ME3SB4**	146	**C613_150.0 P90 BE90LA4**	147
9.6	1387	2.9	149.1	35000	**C803_149.1 S3 ME3SB4**	153	**C803_149.1 P90 BE90LA4**	154
10.2	1264	1.3	140.5	16000	**C613_140.5 S3 ME3SB4**	146	**C613_140.5 P90 BE90LA4**	147
10.4	1278	1.8	137.4	25000	**C703_137.4 S3 ME3SB4**	150	**C703_137.4 P90 BE90LA4**	151
10.5	1271	3.1	136.7	35000	**C803_136.7 S3 ME3SB4**	153	**C803_136.7 P90 BE90LA4**	154
11.2	1153	1.4	128.1	16000	**C613_128.1 S3 ME3SB4**	146	**C613_128.1 P90 BE90LA4**	147
11.3	1180	1.9	126.8	25000	**C703_126.8 S3 ME3SB4**	150	**C703_126.8 P90 BE90LA4**	151
12.6	1022	1.6	113.6	16000	**C613_113.6 S3 ME3SB4**	146	**C613_113.6 P90 BE90LA4**	147
12.6	1057	0.9	113.6	10000	**C513_113.6 S3 ME3SB4**	142	**C513_113.6 P90 BE90LA4**	143
12.7	1046	2.2	112.4	25000	**C703_112.4 S3 ME3SB4**	150	**C703_112.4 P90 BE90LA4**	151
13.8	965	2.4	103.8	25000	**C703_103.8 S3 ME3SB4**	150	**C703_103.8 P90 BE90LA4**	151
13.8	933	1.7	103.6	16000	**C613_103.6 S3 ME3SB4**	146	**C613_103.6 P90 BE90LA4**	147
14.0	947	1.1	101.8	10000	**C513_101.8 S3 ME3SB4**	142	**C513_101.8 P90 BE90LA4**	143
15.4	865	1.2	93.0	10000	**C513_93.0 S3 ME3SB4**	142	**C513_93.0 P90 BE90LA4**	143
15.7	819	2.0	91.0	16000	**C613_91.0 S3 ME3SB4**	146	**C613_91.0 P90 BE90LA4**	147
16.2	820	2.8	88.2	25000	**C703_88.2 S3 ME3SB4**	150	**C703_88.2 P90 BE90LA4**	151
16.6	821	1.0	57.0	10000	**C512_57.0 S3 ME3LB6**	142	**C512_57.0 P100 BE100LA6**	143
17.2	747	2.1	83.0	16000	**C613_83.0 S3 ME3SB4**	146	**C613_83.0 P90 BE90LA4**	147
17.6	757	3.0	81.4	25000	**C703_81.4 S3 ME3SB4**	150	**C703_81.4 P90 BE90LA4**	151
17.9	743	1.3	79.9	10000	**C513_79.9 S3 ME3SB4**	142	**C513_79.9 P90 BE90LA4**	143
18.4	740	0.9	51.4	10000	**C512_51.4 S3 ME3LB6**	142	**C512_51.4 P100 BE100LA6**	143
19.3	668	2.4	74.2	16000	**C613_74.2 S3 ME3SB4**	146	**C613_74.2 P90 BE90LA4**	147
19.6	678	1.5	72.9	10000	**C513_72.9 S3 ME3SB4**	142	**C513_72.9 P90 BE90LA4**	143
19.8	689	1.2	47.8	10000	**C512_47.8 S3 ME3LB6**	142	**C512_47.8 P100 BE100LA6**	143
20.0	663	3.5	71.3	25000	**C703_71.3 S3 ME3SB4**	150	**C703_71.3 P90 BE90LA4**	151
21.1	609	2.6	67.7	16000	**C613_67.7 S3 ME3SB4**	146	**C613_67.7 P90 BE90LA4**	147
21.9	621	1.2	43.1	10000	**C512_43.1 S3 ME3LB6**	142	**C512_43.1 P100 BE100LA6**	143
22.1	601	1.7	64.6	10000	**C513_64.6 S3 ME3SB4**	142	**C513_64.6 P90 BE90LA4**	143
22.2	598	1.0	64.3	7000	**C413_64.3 S3 ME3SB4**	138	**C413_64.3 P90 BE90LA4**	139
24.2	549	1.8	59.0	10000	**C513_59.0 S3 ME3SB4**	142	**C513_59.0 P90 BE90LA4**	143
24.4	545	1.1	58.7	7000	**C413_58.7 S3 ME3SB4**	138	**C413_58.7 P90 BE90LA4**	139
24.4	527	3.0	58.6	16000	**C613_58.6 S3 ME3SB4**	146	**C613_58.6 P90 BE90LA4**	147
25.1	542	1.4	57.0	10000	**C512_57.0 S3 ME3SB4**	142	**C512_57.0 P90 BE90LA4**	143
26.7	481	3.3	53.5	16000	**C613_53.5 S3 ME3SB4**	146	**C613_53.5 P90 BE90LA4**	147
27.8	479	1.3	51.5	7000	**C413_51.5 S3 ME3SB4**	138	**C413_51.5 P90 BE90LA4**	139
27.8	488	1.4	51.4	10000	**C512_51.4 S3 ME3SB4**	142	**C512_51.4 P90 BE90LA4**	143
27.9	476	2.1	51.2	10000	**C513_51.2 S3 ME3SB4**	142	**C513_51.2 P90 BE90LA4**	143

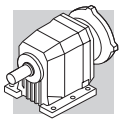

1.5 kW

n_2 min-1	M_2 Nm	S	i	R_{n2} N	IE2		IEC IE2	
29.7	448	1.0	48.2	6290	**C363_48.2 S3 ME3SB4**	134	**C363_48.2 P90 BE90LA4**	135
29.9	454	1.8	47.8	10000	**C512_47.8 S3 ME3SB4**	142	**C512_47.8 P90 BE90LA4**	143
30	437	1.4	47.0	7000	**C413_47.0 S3 ME3SB4**	138	**C413_47.0 P90 BE90LA4**	139
31	435	2.3	46.7	10000	**C513_46.7 S3 ME3SB4**	142	**C513_46.7 P90 BE90LA4**	143
32	425	1.2	44.8	7000	**C412_44.8 S3 ME3SB4**	138	**C412_44.8 P90 BE90LA4**	139
33	404	1.1	43.5	6110	**C363_43.5 S3 ME3SB4**	134	**C363_43.5 P90 BE90LA4**	135
33	410	1.9	43.1	10000	**C512_43.1 S3 ME3SB4**	142	**C512_43.1 P90 BE90LA4**	143
35	376	2.7	40.5	10000	**C513_40.5 S3 ME3SB4**	142	**C513_40.5 P90 BE90LA4**	143
35	383	2.1	40.4	10000	**C512_40.4 S3 ME3SB4**	142	**C512_40.4 P90 BE90LA4**	143
35	375	1.6	40.3	7000	**C413_40.3 S3 ME3SB4**	138	**C413_40.3 P90 BE90LA4**	139
38	354	1.3	38.1	6110	**C363_38.1 S3 ME3SB4**	134	**C363_38.1 P90 BE90LA4**	135
39	352	1.4	37.1	7000	**C412_37.1 S3 ME3SB4**	138	**C412_37.1 P90 BE90LA4**	139
39	344	2.9	37.0	10000	**C513_37.0 S3 ME3SB4**	142	**C513_37.0 P90 BE90LA4**	143
39	346	2.3	36.4	10000	**C512_36.4 S3 ME3SB4**	142	**C512_36.4 P90 BE90LA4**	143
40	343	0.9	36.1	5100	**C322_36.1 S3 ME3SB4**	130	**C322_36.1 P90 BE90LA4**	131
41	322	1.4	34.6	5950	**C363_34.6 S3 ME3SB4**	134	**C363_34.6 P90 BE90LA4**	135
43	317	1.6	33.4	7000	**C412_33.4 S3 ME3SB4**	138	**C412_33.4 P90 BE90LA4**	139
43	314	1.0	33.1	5050	**C322_33.1 S3 ME3SB4**	130	**C322_33.1 P90 BE90LA4**	131
43	314	2.5	33.0	10000	**C512_33.0 S3 ME3SB4**	142	**C512_33.0 P90 BE90LA4**	143
45	299	1.7	31.4	6990	**C412_31.4 S3 ME3SB4**	138	**C412_31.4 P90 BE90LA4**	139
48	283	2.8	29.8	10000	**C512_29.8 S3 ME3SB4**	142	**C512_29.8 P90 BE90LA4**	143
48	283	1.1	29.8	4970	**C322_29.8 S3 ME3SB4**	130	**C322_29.8 P90 BE90LA4**	131
50	267	1.7	28.7	5830	**C363_28.7 S3 ME3SB4**	134	**C363_28.7 P90 BE90LA4**	135
51	269	1.9	28.3	6830	**C412_28.3 S3 ME3SB4**	138	**C412_28.3 P90 BE90LA4**	139
53	256	1.2	26.9	4890	**C322_26.9 S3 ME3SB4**	130	**C322_26.9 P90 BE90LA4**	131
55	244	1.8	26.2	5710	**C363_26.2 S3 ME3SB4**	134	**C363_26.2 P90 BE90LA4**	135
55	246	3.2	25.9	10000	**C512_25.9 S3 ME3SB4**	142	**C512_25.9 P90 BE90LA4**	143
57	239	1.3	25.1	4840	**C322_25.1 S3 ME3SB4**	130	**C322_25.1 P90 BE90LA4**	131
57	238	2.1	25.0	6680	**C412_25.0 S3 ME3SB4**	138	**C412_25.0 P90 BE90LA4**	139
62	218	1.4	22.9	4750	**C322_22.9 S3 ME3SB4**	130	**C322_22.9 P90 BE90LA4**	131
63	214	2.3	22.6	6510	**C412_22.6 S3 ME3SB4**	138	**C412_22.6 P90 BE90LA4**	139
65	206	2.1	22.1	5530	**C363_22.1 S3 ME3SB4**	134	**C363_22.1 P90 BE90LA4**	135
67	204	1.0	21.5	2600	**C222_21.5 S3 ME3SB4**	126	**C222_21.5 P90 BE90LA4**	127
71	191	1.5	20.1	4650	**C322_20.1 S3 ME3SB4**	130	**C322_20.1 P90 BE90LA4**	131
71	190	1.0	20.0	2740	**C222_20.0 S3 ME3SB4**	126	**C222_20.0 P90 BE90LA4**	127
72	188	2.6	19.8	6330	**C412_19.8 S3 ME3SB4**	138	**C412_19.8 P90 BE90LA4**	139
75	181	2.1	19.0	5330	**C362_19.0 S3 ME3SB4**	134	**C362_19.0 P90 BE90LA4**	135
79	173	1.6	18.2	4520	**C322_18.2 S3 ME3SB4**	130	**C322_18.2 P90 BE90LA4**	131
79	172	1.1	18.1	2700	**C222_18.1 S3 ME3SB4**	126	**C222_18.1 P90 BE90LA4**	127
80	169	2.8	17.8	6160	**C412_17.8 S3 ME3SB4**	138	**C412_17.8 P90 BE90LA4**	139
83	163	2.3	17.2	5140	**C362_17.2 S3 ME3SB4**	134	**C362_17.2 P90 BE90LA4**	135
90	150	1.2	15.8	2700	**C222_15.8 S3 ME3SB4**	126	**C222_15.8 P90 BE90LA4**	127
90	150	3.0	15.8	6000	**C412_15.8 S3 ME3SB4**	138	**C412_15.8 P90 BE90LA4**	139
92	148	1.8	15.6	4410	**C322_15.6 S3 ME3SB4**	130	**C322_15.6 P90 BE90LA4**	131
97	140	2.7	14.8	5030	**C362_14.8 S3 ME3SB4**	134	**C362_14.8 P90 BE90LA4**	135
98	138	1.2	14.5	2700	**C222_14.5 S3 ME3SB4**	126	**C222_14.5 P90 BE90LA4**	127
100	135	3.3	14.2	5830	**C412_14.2 S3 ME3SB4**	138	**C412_14.2 P90 BE90LA4**	139
102	134	1.9	14.1	4280	**C322_14.1 S3 ME3SB4**	130	**C322_14.1 P90 BE90LA4**	131
107	127	3.0	13.3	4890	**C362_13.3 S3 ME3SB4**	134	**C362_13.3 P90 BE90LA4**	135
115	118	1.4	12.4	2630	**C222_12.4 S3 ME3SB4**	126	**C222_12.4 P90 BE90LA4**	127
116	117	2.1	12.3	4180	**C322_12.3 S3 ME3SB4**	130	**C322_12.3 P90 BE90LA4**	131
123	111	3.4	11.7	4740	**C362_11.7 S3 ME3SB4**	134	**C362_11.7 P90 BE90LA4**	135
128	106	2.2	11.2	4050	**C322_11.2 S3 ME3SB4**	130	**C322_11.2 P90 BE90LA4**	131
129	105	1.5	11.1	2600	**C222_11.1 S3 ME3SB4**	126	**C222_11.1 P90 BE90LA4**	127
148	92	1.6	9.6	2530	**C222_9.6 S3 ME3SB4**	126	**C222_9.6 P90 BE90LA4**	127
154	88	2.5	9.3	3900	**C322_9.3 S3 ME3SB4**	130	**C322_9.3 P90 BE90LA4**	131
165	82	1.7	8.7	2470	**C222_8.7 S3 ME3SB4**	126	**C222_8.7 P90 BE90LA4**	127
169	81	2.6	8.5	3790	**C322_8.5 S3 ME3SB4**	130	**C322_8.5 P90 BE90LA4**	131
180	75	2.3	15.8	2440	**C222_15.8 S3 ME3SA2**	126	**C222_15.8 P90 BE90SA2**	127
191	71	2.2	5.0	3610	**C322_5.0 S3 ME3LB6**	130	**C322_5.0 P100 BE100LA6**	131
200	68	2.9	7.2	3640	**C322_7.2 S3 ME3SB4**	130	**C322_7.2 P90 BE90LA4**	131
202	67	1.9	7.1	2380	**C222_7.1 S3 ME3SB4**	126	**C222_7.1 P90 BE90LA4**	127
204	67	3.0	4.6	4050	**C362_4.6 S3 ME3LB6**	134	**C362_4.6 P100 BE100LA6**	135
228	60	2.6	6.3	3450	**C322_6.3 S3 ME3SB4**	130	**C322_6.3 P90 BE90LA4**	131
229	59	0.9	6.2	600	**C122_6.2 S3 ME3SB4**	122	**C122_6.2 P90 BE90LA4**	123

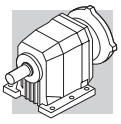

1.5 kW

n_2 min-1	M_2 Nm	S	i	R_{n2} N	IE2		IEC IE2	
235	58	1.8	6.1	2250	**C222_6.1 S3 ME3SB4**	126	**C222_6.1 P90 BE90LA4**	127
240	57	1.2	11.9	1250	**C122_11.9 S3 ME3SA2**	122	**C122_11.9 P90 BE90SA2**	123
253	54	2.9	5.7	3320	**C322_5.7 S3 ME3SB4**	130	**C322_5.7 P90 BE90LA4**	131
255	53	1.7	3.7	2210	**C222_3.7 S3 ME3LB6**	126	**C222_3.7 P100 BE100LA6**	127
255	53	1.0	5.6	720	**C122_5.6 S3 ME3SB4**	122	**C122_5.6 P90 BE90LA4**	123
256	53	1.9	5.6	2200	**C222_5.6 S3 ME3SB4**	126	**C222_5.6 P90 BE90LA4**	127
284	48	1.3	10.1	1340	**C122_10.1 S3 ME3SA2**	122	**C122_10.1 P90 BE90SA2**	123
289	47	3.3	5.0	3240	**C322_5.0 S3 ME3SB4**	130	**C322_5.0 P90 BE90LA4**	131
294	46	1.0	4.9	840	**C122_4.9 S3 ME3SB4**	122	**C122_4.9 P90 BE90LA4**	123
300	45	2.2	4.8	2140	**C222_4.8 S3 ME3SB4**	126	**C222_4.8 P90 BE90LA4**	127
323	42	1.4	8.8	1300	**C122_8.8 S3 ME3SA2**	122	**C122_8.8 P90 BE90SA2**	123
330	41	3.3	8.7	2130	**C222_8.7 S3 ME3SA2**	126	**C222_8.7 P90 BE90SA2**	127
332	41	1.1	4.3	930	**C122_4.3 S3 ME3SB4**	122	**C122_4.3 P90 BE90LA4**	123
336	40	2.3	4.3	2100	**C222_4.3 S3 ME3SB4**	126	**C222_4.3 P90 BE90LA4**	127
341	40	0.9	2.8	1000	**C122_2.8 S3 ME3LB6**	122	**C122_2.8 P100 BE100LA6**	123
347	39	2.0	2.7	2060	**C222_2.7 S3 ME3LB6**	126	**C222_2.7 P100 BE100LA6**	127
375	36	1.5	7.6	1270	**C122_7.6 S3 ME3SA2**	122	**C122_7.6 P90 BE90SA2**	123
386	35	2.6	3.7	2020	**C222_3.7 S3 ME3SB4**	126	**C222_3.7 P90 BE90LA4**	127
392	35	1.2	3.7	1100	**C122_3.7 S3 ME3SB4**	122	**C122_3.7 P90 BE90LA4**	123
403	34	3.9	7.1	2030	**C222_7.1 S3 ME3SA2**	126	**C222_7.1 P90 BE90SA2**	127
430	32	2.7	3.3	2000	**C222_3.3 S3 ME3SB4**	126	**C222_3.3 P90 BE90LA4**	127
446	30	1.3	3.2	1120	**C122_3.2 S3 ME3SB4**	122	**C122_3.2 P90 BE90LA4**	123
458	30	1.8	6.2	1180	**C122_6.2 S3 ME3SA2**	122	**C122_6.2 P90 BE90SA2**	123
469	29	3.6	6.1	1920	**C222_6.1 S3 ME3SA2**	126	**C222_6.1 P90 BE90SA2**	127
510	27	1.9	5.6	1140	**C122_5.6 S3 ME3SA2**	122	**C122_5.6 P90 BE90SA2**	123
511	27	3.8	5.6	1860	**C222_5.6 S3 ME3SA2**	126	**C222_5.6 P90 BE90SA2**	127
517	26	1.4	2.8	1140	**C122_2.8 S3 ME3SB4**	122	**C122_2.8 P90 BE90LA4**	123
525	26	3.1	2.7	1870	**C222_2.7 S3 ME3SB4**	126	**C222_2.7 P90 BE90LA4**	127
586	23	2.1	4.9	1110	**C122_4.9 S3 ME3SA2**	122	**C122_4.9 P90 BE90SA2**	123
599	23	4.4	4.8	1810	**C222_4.8 S3 ME3SA2**	126	**C222_4.8 P90 BE90SA2**	127
662	21	2.2	4.3	1070	**C122_4.3 S3 ME3SA2**	122	**C122_4.3 P90 BE90SA2**	123
782	17	2.4	3.7	1030	**C122_3.7 S3 ME3SA2**	122	**C122_3.7 P90 BE90SA2**	123
890	15	2.6	3.2	990	**C122_3.2 S3 ME3SA2**	122	**C122_3.2 P90 BE90SA2**	123
1032	13	2.8	2.8	960	**C122_2.8 S3 ME3SA2**	122	**C122_2.8 P90 BE90SA2**	123

2.2 kW

n_2 min-1	M_2 Nm	S	i	R_{n2} N	IE2		IEC IE2	
1.4	13281	0.9	1004	85000	**C1004_1004 S3 ME3LA4**	159	**C1004_1004 P100 BE100LA4**	160
1.6	12016	1.0	908.2	85000	**C1004_908.2 S3 ME3LA4**	159	**C1004_908.2 P100 BE100LA4**	160
1.7	11157	1.1	843.3	85000	**C1004_843.3 S3 ME3LA4**	159	**C1004_843.3 P100 BE100LA4**	160
1.8	10263	1.2	775.7	85000	**C1004_775.7 S3 ME3LA4**	159	**C1004_775.7 P100 BE100LA4**	160
2.0	9530	1.3	720.3	85000	**C1004_720.3 S3 ME3LA4**	159	**C1004_720.3 P100 BE100LA4**	160
2.3	8301	1.4	627.4	85000	**C1004_627.4 S3 ME3LA4**	159	**C1004_627.4 P100 BE100LA4**	160
2.5	7710	0.9	582.8	60000	**C904_582.8 S3 ME3LA4**	156	**C904_582.8 P100 BE100LA4**	157
2.5	7708	1.6	582.6	85000	**C1004_582.6 S3 ME3LA4**	159	**C1004_582.6 P100 BE100LA4**	160
2.7	7068	1.0	534.2	60000	**C904_534.2 S3 ME3LA4**	156	**C904_534.2 P100 BE100LA4**	157
2.8	6650	1.8	502.6	85000	**C1004_502.6 S3 ME3LA4**	159	**C1004_502.6 P100 BE100LA4**	160
3.1	6175	1.9	466.7	85000	**C1004_466.7 S3 ME3LA4**	159	**C1004_466.7 P100 BE100LA4**	160
3.1	6048	1.2	457.1	60000	**C904_457.1 S3 ME3LA4**	156	**C904_457.1 P100 BE100LA4**	157
3.4	5544	1.3	419.0	60000	**C904_419.0 S3 ME3LA4**	156	**C904_419.0 P100 BE100LA4**	157
3.5	5421	2.2	409.8	85000	**C1004_409.8 S3 ME3LA4**	159	**C1004_409.8 P100 BE100LA4**	160
3.8	5034	2.4	380.5	85000	**C1004_380.5 S3 ME3LA4**	159	**C1004_380.5 P100 BE100LA4**	160
3.9	4892	1.5	369.8	60000	**C904_369.8 S3 ME3LA4**	156	**C904_369.8 P100 BE100LA4**	157
4.2	4484	1.6	339.0	60000	**C904_339.0 S3 ME3LA4**	156	**C904_339.0 P100 BE100LA4**	157
4.3	4422	0.9	334.3	35000	**C804_334.3 S3 ME3LA4**	153	**C804_334.3 P100 BE100LA4**	154
4.4	4282	2.8	323.6	85000	**C1004_323.6 S3 ME3LA4**	159	**C1004_323.6 P100 BE100LA4**	160
4.9	3875	1.9	292.9	60000	**C904_292.9 S3 ME3LA4**	156	**C904_292.9 P100 BE100LA4**	157
5.0	3779	1.1	285.7	35000	**C804_285.7 S3 ME3LA4**	153	**C804_285.7 P100 BE100LA4**	154
5.3	3552	2.0	268.5	60000	**C904_268.5 S3 ME3LA4**	156	**C904_268.5 P100 BE100LA4**	157
5.5	3464	1.2	261.9	35000	**C804_261.9 S3 ME3LA4**	153	**C804_261.9 P100 BE100LA4**	154

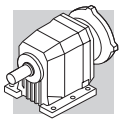

2.2 kW

n_2 min-1	M_2 Nm	S	i	R_{n2} N	IE2		IEC IE2	
6.2	3065	2.3	231.7	60000	**C904_231.7 S3 ME3LA4**	156	**C904_231.7 P100 BE100LA4**	157
6.6	2951	1.4	215.8	35000	**C803_215.8 S3 ME3LA4**	153	**C803_215.8 P100 BE100LA4**	154
6.7	2810	2.6	212.4	60000	**C904_212.4 S3 ME3LA4**	156	**C904_212.4 P100 BE100LA4**	157
7.2	2705	1.4	197.9	35000	**C803_197.9 S3 ME3LA4**	153	**C803_197.9 P100 BE100LA4**	154
7.8	2520	1.6	184.4	35000	**C803_184.4 S3 ME3LA4**	153	**C803_184.4 P100 BE100LA4**	154
8.0	2450	0.9	179.2	25000	**C703_179.2 S3 ME3LA4**	150	**C703_179.2 P100 BE100LA4**	151
8.5	2310	1.7	169.0	35000	**C803_169.0 S3 ME3LA4**	153	**C803_169.0 P100 BE100LA4**	154
8.8	2226	1.0	162.8	25000	**C703_162.8 S3 ME3LA4**	150	**C703_162.8 P100 BE100LA4**	151
9.5	2055	1.1	150.3	25000	**C703_150.3 S3 ME3LA4**	150	**C703_150.3 P100 BE100LA4**	151
9.6	2038	2.0	149.1	35000	**C803_149.1 S3 ME3LA4**	153	**C803_149.1 P100 BE100LA4**	154
10.4	1878	1.2	137.4	25000	**C703_137.4 S3 ME3LA4**	150	**C703_137.4 P100 BE100LA4**	151
10.5	1869	2.1	136.7	35000	**C803_136.7 S3 ME3LA4**	153	**C803_136.7 P100 BE100LA4**	154
11.2	1695	0.9	128.1	16000	**C613_128.1 S3 ME3LA4**	146	**C613_128.1 P100 BE100LA4**	147
11.3	1734	1.3	126.8	25000	**C703_126.8 S3 ME3LA4**	150	**C703_126.8 P100 BE100LA4**	151
12.0	1633	2.4	119.5	35000	**C803_119.5 S3 ME3LA4**	153	**C803_119.5 P100 BE100LA4**	154
12.6	1503	1.1	113.6	16000	**C613_113.6 S3 ME3LA4**	146	**C613_113.6 P100 BE100LA4**	147
12.7	1537	1.5	112.4	25000	**C703_112.4 S3 ME3LA4**	150	**C703_112.4 P100 BE100LA4**	151
13.1	1497	2.7	109.5	35000	**C803_109.5 S3 ME3LA4**	153	**C803_109.5 P100 BE100LA4**	154
13.8	1419	1.6	103.8	25000	**C703_103.8 S3 ME3LA4**	150	**C703_103.8 P100 BE100LA4**	151
13.8	1371	1.2	103.6	16000	**C613_103.6 S3 ME3LA4**	146	**C613_103.6 P100 BE100LA4**	147
14.7	1331	3.0	97.4	35000	**C803_97.4 S3 ME3LA4**	153	**C803_97.4 P100 BE100LA4**	154
15.7	1204	1.3	91.0	16000	**C613_91.0 S3 ME3LA4**	146	**C613_91.0 P100 BE100LA4**	147
16.0	1220	3.3	89.3	35000	**C803_89.3 S3 ME3LA4**	153	**C803_89.3 P100 BE100LA4**	154
16.2	1206	1.9	88.2	25000	**C703_88.2 S3 ME3LA4**	150	**C703_88.2 P100 BE100LA4**	151
17.2	1099	1.5	83.0	16000	**C613_83.0 S3 ME3LA4**	146	**C613_83.0 P100 BE100LA4**	147
17.6	1113	2.1	81.4	25000	**C703_81.4 S3 ME3LA4**	150	**C703_81.4 P100 BE100LA4**	151
17.9	1092	0.9	79.9	10000	**C513_79.9 S3 ME3LA4**	142	**C513_79.9 P100 BE100LA4**	143
19.3	982	1.6	74.2	16000	**C613_74.2 S3 ME3LA4**	146	**C613_74.2 P100 BE100LA4**	147
19.6	997	1.0	72.9	10000	**C513_72.9 S3 ME3LA4**	142	**C513_72.9 P100 BE100LA4**	143
20.0	975	2.4	71.3	25000	**C703_71.3 S3 ME3LA4**	150	**C703_71.3 P100 BE100LA4**	151
21.1	896	1.8	67.7	16000	**C613_67.7 S3 ME3LA4**	146	**C613_67.7 P100 BE100LA4**	147
21.7	900	2.6	65.9	25000	**C703_65.9 S3 ME3LA4**	150	**C703_65.9 P100 BE100LA4**	151
22.1	883	1.1	64.6	10000	**C513_64.6 S3 ME3LA4**	142	**C513_64.6 P100 BE100LA4**	143
24.2	806	1.2	59.0	10000	**C513_59.0 S3 ME3LA4**	142	**C513_59.0 P100 BE100LA4**	143
24.4	775	2.1	58.6	16000	**C613_58.6 S3 ME3LA4**	146	**C613_58.6 P100 BE100LA4**	147
25.1	796	1.0	57.0	10000	**C512_57.0 S3 ME3LA4**	142	**C512_57.0 P100 BE100LA4**	143
25.3	773	3.0	56.5	25000	**C703_56.5 S3 ME3LA4**	150	**C703_56.5 P100 BE100LA4**	151
26.7	707	2.3	53.5	16000	**C613_53.5 S3 ME3LA4**	146	**C613_53.5 P100 BE100LA4**	147
27.8	718	1.0	51.4	10000	**C512_51.4 S3 ME3LA4**	142	**C512_51.4 P100 BE100LA4**	143
27.9	700	1.4	51.2	10000	**C513_51.2 S3 ME3LA4**	142	**C513_51.2 P100 BE100LA4**	143
29.9	668	1.2	47.8	10000	**C512_47.8 S3 ME3LA4**	142	**C512_47.8 P100 BE100LA4**	143
30	630	2.5	47.6	16000	**C613_47.6 S3 ME3LA4**	146	**C613_47.6 P100 BE100LA4**	147
30	642	0.9	47.0	6440	**C413_47.0 S3 ME3LA4**	138	**C413_47.0 P100 BE100LA4**	139
31	639	1.6	46.7	10000	**C513_46.7 S3 ME3LA4**	142	**C513_46.7 P100 BE100LA4**	143
33	575	2.8	43.4	16000	**C613_43.4 S3 ME3LA4**	146	**C613_43.4 P100 BE100LA4**	147
33	602	1.3	43.1	10000	**C512_43.1 S3 ME3LA4**	142	**C512_43.1 P100 BE100LA4**	143
35	553	1.8	40.5	10000	**C513_40.5 S3 ME3LA4**	142	**C513_40.5 P100 BE100LA4**	143
35	564	1.4	40.4	10000	**C512_40.4 S3 ME3LA4**	142	**C512_40.4 P100 BE100LA4**	143
35	551	1.1	40.3	6460	**C413_40.3 S3 ME3LA4**	138	**C413_40.3 P100 BE100LA4**	139
38	531	2.5	38.0	16000	**C612_38.0 S3 ME3LA4**	146	**C612_38.0 P100 BE100LA4**	147
39	518	1.0	37.1	6370	**C412_37.1 S3 ME3LA4**	138	**C412_37.1 P100 BE100LA4**	139
39	505	2.0	37.0	10000	**C513_37.0 S3 ME3LA4**	142	**C513_37.0 P100 BE100LA4**	143
39	503	1.2	36.8	6390	**C413_36.8 S3 ME3LA4**	138	**C413_36.8 P100 BE100LA4**	139
39	508	1.6	36.4	10000	**C512_36.4 S3 ME3LA4**	142	**C512_36.4 P100 BE100LA4**	143
41	473	1.0	34.6	5350	**C363_34.6 S3 ME3LA4**	134	**C363_34.6 P100 BE100LA4**	135
42	478	2.6	34.2	16000	**C612_34.2 S3 ME3LA4**	146	**C612_34.2 P100 BE100LA4**	147
43	466	1.1	33.4	6290	**C412_33.4 S3 ME3LA4**	138	**C412_33.4 P100 BE100LA4**	139
43	461	1.7	33.0	10000	**C512_33.0 S3 ME3LA4**	142	**C512_33.0 P100 BE100LA4**	143
45	439	1.1	31.4	6290	**C412_31.4 S3 ME3LA4**	138	**C412_31.4 P100 BE100LA4**	139
47	425	3.2	30.4	16000	**C612_30.4 S3 ME3LA4**	146	**C612_30.4 P100 BE100LA4**	147
48	411	2.4	30.1	10000	**C513_30.1 S3 ME3LA4**	142	**C513_30.1 P100 BE100LA4**	143
48	416	1.9	29.8	10000	**C512_29.8 S3 ME3LA4**	142	**C512_29.8 P100 BE100LA4**	143
50	393	1.1	28.7	5220	**C363_28.7 S3 ME3LA4**	134	**C363_28.7 P100 BE100LA4**	135
51	395	1.3	28.3	6190	**C412_28.3 S3 ME3LA4**	138	**C412_28.3 P100 BE100LA4**	139
52	375	2.6	27.4	10000	**C513_27.4 S3 ME3LA4**	142	**C513_27.4 P100 BE100LA4**	143

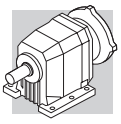

2.2 kW

n_2 min-1	M_2 Nm	S	i	R_{n2} N	IE2		IEC IE2	
52	383	3.5	27.4	15900	**C612_27.4 S3 ME3LA4**	146	**C612_27.4 P100 BE100LA4**	147
55	358	1.2	26.2	5140	**C363_26.2 S3 ME3LA4**	134	**C363_26.2 P100 BE100LA4**	135
55	362	2.2	25.9	10000	**C512_25.9 S3 ME3LA4**	142	**C512_25.9 P100 BE100LA4**	143
57	351	0.9	25.1	4270	**C322_25.1 S3 ME3LA4**	130	**C322_25.1 P100 BE100LA4**	131
57	350	1.4	25.0	6120	**C412_25.0 S3 ME3LA4**	138	**C412_25.0 P100 BE100LA4**	139
61	326	2.5	23.4	10000	**C512_23.4 S3 ME3LA4**	142	**C512_23.4 P100 BE100LA4**	143
62	320	0.9	22.9	4240	**C322_22.9 S3 ME3LA4**	130	**C322_22.9 P100 BE100LA4**	131
63	315	1.6	22.6	6000	**C412_22.6 S3 ME3LA4**	138	**C412_22.6 P100 BE100LA4**	139
65	303	1.4	22.1	5060	**C363_22.1 S3 ME3LA4**	134	**C363_22.1 P100 BE100LA4**	135
68	293	2.7	21.0	10000	**C512_21.0 S3 ME3LA4**	142	**C512_21.0 P100 BE100LA4**	143
71	280	1.1	20.1	4200	**C322_20.1 S3 ME3LA4**	130	**C322_20.1 P100 BE100LA4**	131
72	276	1.8	19.8	5890	**C412_19.8 S3 ME3LA4**	138	**C412_19.8 P100 BE100LA4**	139
75	265	1.4	19.0	4920	**C362_19.0 S3 ME3LA4**	134	**C362_19.0 P100 BE100LA4**	135
76	264	3.0	18.9	10000	**C512_18.9 S3 ME3LA4**	142	**C512_18.9 P100 BE100LA4**	143
77	258	1.0	12.3	4100	**C322_12.3 S4 ME4SA6**	130	**C322_12.3 P112 BE112M6**	131
79	254	1.1	18.2	4120	**C322_18.2 S3 ME3LA4**	130	**C322_18.2 P100 BE100LA4**	131
80	248	1.9	17.8	5760	**C412_17.8 S3 ME3LA4**	138	**C412_17.8 P100 BE100LA4**	139
83	240	1.6	17.2	4800	**C362_17.2 S3 ME3LA4**	134	**C362_17.2 P100 BE100LA4**	135
85	234	1.0	11.2	4060	**C322_11.2 S4 ME4SA6**	130	**C322_11.2 P112 BE112M6**	131
90	221	2.0	15.8	5650	**C412_15.8 S3 ME3LA4**	138	**C412_15.8 P100 BE100LA4**	139
92	218	1.2	15.6	4060	**C322_15.6 S3 ME3LA4**	130	**C322_15.6 P100 BE100LA4**	131
97	206	1.8	14.8	4710	**C362_14.8 S3 ME3LA4**	134	**C362_14.8 P100 BE100LA4**	135
100	199	2.2	14.2	5510	**C412_14.2 S3 ME3LA4**	138	**C412_14.2 P100 BE100LA4**	139
102	197	1.3	14.1	3980	**C322_14.1 S3 ME3LA4**	130	**C322_14.1 P100 BE100LA4**	131
103	194	1.1	9.3	3960	**C322_9.3 S4 ME4SA6**	130	**C322_9.3 P112 BE112M6**	131
107	186	2.0	13.3	4590	**C362_13.3 S3 ME3LA4**	134	**C362_13.3 P100 BE100LA4**	135
113	177	1.2	8.5	3890	**C322_8.5 S4 ME4SA6**	130	**C322_8.5 P112 BE112M6**	131
115	173	0.9	12.4	2270	**C222_12.4 S3 ME3LA4**	126	**C222_12.4 P100 BE100LA4**	127
115	173	2.5	12.4	5360	**C412_12.4 S3 ME3LA4**	138	**C412_12.4 P100 BE100LA4**	139
116	172	1.4	12.3	3900	**C322_12.3 S3 ME3LA4**	130	**C322_12.3 P100 BE100LA4**	131
123	163	2.3	11.7	4490	**C362_11.7 S3 ME3LA4**	134	**C362_11.7 P100 BE100LA4**	135
128	156	1.5	11.2	3800	**C322_11.2 S3 ME3LA4**	130	**C322_11.2 P100 BE100LA4**	131
128	156	2.7	11.2	5220	**C412_11.2 S3 ME3LA4**	138	**C412_11.2 P100 BE100LA4**	139
129	155	1.0	11.1	2250	**C222_11.1 S3 ME3LA4**	126	**C222_11.1 P100 BE100LA4**	127
133	150	1.3	7.2	3810	**C322_7.2 S4 ME4SA6**	130	**C322_7.2 P112 BE112M6**	131
135	148	2.6	10.6	4320	**C362_10.6 S3 ME3LA4**	134	**C362_10.6 P100 BE100LA4**	135
148	135	1.1	9.6	2250	**C222_9.6 S3 ME3LA4**	126	**C222_9.6 P100 BE100LA4**	127
149	134	2.9	9.6	5050	**C412_9.6 S3 ME3LA4**	138	**C412_9.6 P100 BE100LA4**	139
152	131	1.2	6.3	3510	**C322_6.3 S4 ME4SA6**	130	**C322_6.3 P112 BE112M6**	131
154	130	1.7	9.3	3690	**C322_9.3 S3 ME3LA4**	130	**C322_9.3 P100 BE100LA4**	131
163	123	3.1	8.8	4210	**C362_8.8 S3 ME3LA4**	134	**C362_8.8 P100 BE100LA4**	135
165	121	1.1	8.7	2220	**C222_8.7 S3 ME3LA4**	126	**C222_8.7 P100 BE100LA4**	127
165	121	3.2	8.6	4850	**C412_8.6 S3 ME3LA4**	138	**C412_8.6 P100 BE100LA4**	139
169	118	1.8	8.5	3600	**C322_8.5 S3 ME3LA4**	130	**C322_8.5 P100 BE100LA4**	131
169	118	1.3	5.7	3450	**C322_5.7 S4 ME4SA6**	130	**C322_5.7 P112 BE112M6**	131
193	103	1.5	5.0	3410	**C322_5.0 S4 ME4SA6**	130	**C322_5.0 P112 BE112M6**	131
200	100	2.0	7.2	3480	**C322_7.2 S3 ME3LA4**	130	**C322_7.2 P100 BE100LA4**	131
202	99	1.3	7.1	2180	**C222_7.1 S3 ME3LA4**	126	**C222_7.1 P100 BE100LA4**	127
228	87	1.8	6.3	3250	**C322_6.3 S3 ME3LA4**	130	**C322_6.3 P100 BE100LA4**	131
235	85	1.2	6.1	2040	**C222_6.1 S3 ME3LA4**	126	**C222_6.1 P100 BE100LA4**	127
245	82	2.4	5.8	3710	**C362_5.8 S3 ME3LA4**	134	**C362_5.8 P100 BE100LA4**	135
253	79	2.0	5.7	3180	**C322_5.7 S3 ME3LA4**	130	**C322_5.7 P100 BE100LA4**	131
256	78	1.3	5.6	2050	**C222_5.6 S3 ME3LA4**	126	**C222_5.6 P100 BE100LA4**	127
271	74	2.7	5.3	3550	**C362_5.3 S3 ME3LA4**	134	**C362_5.3 P100 BE100LA4**	135
289	69	2.2	5.0	3100	**C322_5.0 S3 ME3LA4**	130	**C322_5.0 P100 BE100LA4**	131
300	67	1.5	4.8	1970	**C222_4.8 S3 ME3LA4**	126	**C222_4.8 P100 BE100LA4**	127
309	65	3.4	9.3	3130	**C322_9.3 S3 ME3LA2**	130	**C322_9.3 P90 BE90L2**	131
309	65	3.1	4.6	3490	**C362_4.6 S3 ME3LA4**	134	**C362_4.6 P100 BE100LA4**	135
318	63	2.4	4.5	3000	**C322_4.5 S3 ME3LA4**	130	**C322_4.5 P100 BE100LA4**	131
332	60	2.3	8.7	2000	**C222_8.7 S3 ME3LA2**	126	**C222_8.7 P90 BE90L2**	127
336	59	1.6	4.3	1970	**C222_4.3 S3 ME3LA4**	126	**C222_4.3 P100 BE100LA4**	127
355	56	3.6	2.7	3380	**C362_2.7 S4 ME4SA6**	134	**C362_2.7 P112 BE112M6**	135
377	53	1.1	7.6	930	**C122_7.6 S3 ME3LA2**	122	**C122_7.6 P90 BE90L2**	123
383	52	2.9	3.7	2890	**C322_3.7 S3 ME3LA4**	130	**C322_3.7 P100 BE100LA4**	131
386	52	1.7	3.7	1890	**C222_3.7 S3 ME3LA4**	126	**C222_3.7 P100 BE100LA4**	127

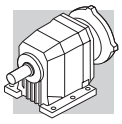

2.2 kW

n_2 min-1	M_2 Nm	S	i	R_{n2} N	IE2		IEC IE2	
401	50	4.0	7.2	2920	**C322_7.2 S3 ME3LA2**	130	**C322_7.2 P90 BE90L2**	131
405	49	2.6	7.1	1920	**C222_7.1 S3 ME3LA2**	126	**C222_7.1 P90 BE90L2**	127
419	48	2.9	3.4	2800	**C322_3.4 S3 ME3LA4**	130	**C322_3.4 P100 BE100LA4**	131
430	46	1.8	3.3	1890	**C222_3.3 S3 ME3LA4**	126	**C222_3.3 P100 BE100LA4**	127
446	45	0.9	3.2	580	**C122_3.2 S3 ME3LA4**	122	**C122_3.2 P100 BE100LA4**	123
458	44	3.6	6.3	2760	**C322_6.3 S3 ME3LA2**	130	**C322_6.3 P90 BE90L2**	131
472	42	2.5	6.1	1820	**C222_6.1 S3 ME3LA2**	126	**C222_6.1 P90 BE90L2**	127
497	40	3.2	2.9	2700	**C322_2.9 S3 ME3LA4**	130	**C322_2.9 P100 BE100LA4**	131
513	39	2.6	5.6	1770	**C222_5.6 S3 ME3LA2**	126	**C222_5.6 P90 BE90L2**	127
517	39	1.0	2.8	690	**C122_2.8 S3 ME3LA4**	122	**C122_2.8 P100 BE100LA4**	123
525	38	2.1	2.7	1770	**C222_2.7 S3 ME3LA4**	126	**C222_2.7 P100 BE100LA4**	127
602	33	3.0	4.8	1720	**C222_4.8 S3 ME3LA2**	126	**C222_4.8 P90 BE90L2**	127
674	30	3.2	4.3	1670	**C222_4.3 S3 ME3LA2**	126	**C222_4.3 P90 BE90L2**	127
774	26	3.5	3.7	1620	**C222_3.7 S3 ME3LA2**	126	**C222_3.7 P90 BE90L2**	127
786	25	1.7	3.7	970	**C122_3.7 S3 ME3LA2**	122	**C122_3.7 P90 BE90L2**	123
863	23	3.7	3.3	1550	**C222_3.3 S3 ME3LA2**	126	**C222_3.3 P90 BE90L2**	127
895	22	1.8	3.2	940	**C122_3.2 S3 ME3LA2**	122	**C122_3.2 P90 BE90L2**	123
1037	19	1.9	2.8	920	**C122_2.8 S3 ME3LA2**	122	**C122_2.8 P90 BE90L2**	123
1054	19	4.2	2.7	1490	**C222_2.7 S3 ME3LA2**	126	**C222_2.7 P90 BE90L2**	127

3 kW

n_2 min-1	M_2 Nm	S	i	R_{n2} N	IE2		IEC IE2	
2.0	12965	0.9	720.3	85000	**C1004_720.3 S3 ME3LB4**	159	**C1004_720.3 P100 BE100LB4**	160
2.3	11293	1.1	627.4	85000	**C1004_627.4 S3 ME3LB4**	159	**C1004_627.4 P100 BE100LB4**	160
2.5	10487	1.1	582.6	85000	**C1004_582.6 S3 ME3LB4**	159	**C1004_582.6 P100 BE100LB4**	160
2.9	9047	1.3	502.6	85000	**C1004_502.6 S3 ME3LB4**	159	**C1004_502.6 P100 BE100LB4**	160
3.1	8401	1.4	466.7	85000	**C1004_466.7 S3 ME3LB4**	159	**C1004_466.7 P100 BE100LB4**	160
3.4	7543	1.0	419.0	60000	**C904_419.0 S3 ME3LB4**	156	**C904_419.0 P100 BE100LB4**	157
3.5	7376	1.6	409.8	85000	**C1004_409.8 S3 ME3LB4**	159	**C1004_409.8 P100 BE100LB4**	160
3.8	6849	1.8	380.5	85000	**C1004_380.5 S3 ME3LB4**	159	**C1004_380.5 P100 BE100LB4**	160
3.9	6656	1.1	369.8	60000	**C904_369.8 S3 ME3LB4**	156	**C904_369.8 P100 BE100LB4**	157
4.2	6101	1.2	339.0	60000	**C904_339.0 S3 ME3LB4**	156	**C904_339.0 P100 BE100LB4**	157
4.4	5825	2.1	323.6	85000	**C1004_323.6 S3 ME3LB4**	159	**C1004_323.6 P100 BE100LB4**	160
4.8	5409	2.2	300.5	85000	**C1004_300.5 S3 ME3LB4**	159	**C1004_300.5 P100 BE100LB4**	160
4.9	5272	1.4	292.9	60000	**C904_292.9 S3 ME3LB4**	156	**C904_292.9 P100 BE100LB4**	157
5.4	4833	1.5	268.5	60000	**C904_268.5 S3 ME3LB4**	156	**C904_268.5 P100 BE100LB4**	157
5.5	4734	2.5	263.0	85000	**C1004_263.0 S3 ME3LB4**	159	**C1004_263.0 P100 BE100LB4**	160
5.9	4396	2.7	244.2	85000	**C1004_244.2 S3 ME3LB4**	159	**C1004_244.2 P100 BE100LB4**	160
6.2	4170	1.7	231.7	60000	**C904_231.7 S3 ME3LB4**	156	**C904_231.7 P100 BE100LB4**	157
6.7	4015	1.0	215.8	35000	**C803_215.8 S3 ME3LB4**	153	**C803_215.8 P100 BE100LB4**	154
6.8	3823	1.9	212.4	60000	**C904_212.4 S3 ME3LB4**	156	**C904_212.4 P100 BE100LB4**	157
7.3	3680	1.0	197.9	35000	**C803_197.9 S3 ME3LB4**	153	**C803_197.9 P100 BE100LB4**	154
7.8	3429	1.2	184.4	35000	**C803_184.4 S3 ME3LB4**	153	**C803_184.4 P100 BE100LB4**	154
8.4	3201	2.2	172.1	60000	**C903_172.1 S3 ME3LB4**	156	**C903_172.1 P100 BE100LB4**	157
8.5	3143	1.3	169.0	35000	**C803_169.0 S3 ME3LB4**	153	**C803_169.0 P100 BE100LB4**	154
9.1	2934	2.4	157.8	60000	**C903_157.8 S3 ME3LB4**	156	**C903_157.8 P100 BE100LB4**	157
9.7	2773	1.4	149.1	35000	**C803_149.1 S3 ME3LB4**	153	**C803_149.1 P100 BE100LB4**	154
9.8	2722	2.6	146.3	60000	**C903_146.3 S3 ME3LB4**	156	**C903_146.3 P100 BE100LB4**	157
10.5	2542	1.6	136.7	35000	**C803_136.7 S3 ME3LB4**	153	**C803_136.7 P100 BE100LB4**	154
10.7	2495	2.8	134.1	60000	**C903_134.1 S3 ME3LB4**	156	**C903_134.1 P100 BE100LB4**	157
11.4	2359	1.0	126.8	25000	**C703_126.8 S3 ME3LB4**	150	**C703_126.8 P100 BE100LB4**	151
12.1	2222	1.8	119.5	35000	**C803_119.5 S3 ME3LB4**	153	**C803_119.5 P100 BE100LB4**	154

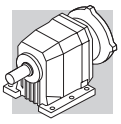

3 kW

n_2 min-1	M_2 Nm	S	i	R_{n2} N	IE2		IEC IE2	
12.3	2171	3.3	116.7	60000	**C903_116.7 S3 ME3LB4**	156	**C903_116.7 P100 BE100LB4**	157
12.8	2091	1.1	112.4	25000	**C703_112.4 S3 ME3LB4**	150	**C703_112.4 P100 BE100LB4**	151
13.2	2037	2.0	109.5	35000	**C803_109.5 S3 ME3LB4**	153	**C803_109.5 P100 BE100LB4**	154
13.9	1931	1.2	103.8	25000	**C703_103.8 S3 ME3LB4**	150	**C703_103.8 P100 BE100LB4**	151
14.8	1811	2.2	97.4	35000	**C803_97.4 S3 ME3LB4**	153	**C803_97.4 P100 BE100LB4**	154
15.8	1638	1.0	91.0	16000	**C613_91.0 S3 ME3LB4**	146	**C613_91.0 P100 BE100LB4**	147
16.1	1660	2.4	89.3	35000	**C803_89.3 S3 ME3LB4**	153	**C803_89.3 P100 BE100LB4**	154
16.3	1640	1.4	88.2	25000	**C703_88.2 S3 ME3LB4**	150	**C703_88.2 P100 BE100LB4**	151
17.3	1495	1.1	83.0	16000	**C613_83.0 S3 ME3LB4**	146	**C613_83.0 P100 BE100LB4**	147
17.7	1514	1.5	81.4	25000	**C703_81.4 S3 ME3LB4**	150	**C703_81.4 P100 BE100LB4**	151
18.7	1431	2.8	76.9	35000	**C803_76.9 S3 ME3LB4**	153	**C803_76.9 P100 BE100LB4**	154
19.4	1336	1.2	74.2	16000	**C613_74.2 S3 ME3LB4**	146	**C613_74.2 P100 BE100LB4**	147
20.2	1327	1.7	71.3	25000	**C703_71.3 S3 ME3LB4**	150	**C703_71.3 P100 BE100LB4**	151
20.4	1311	3.1	70.5	35000	**C803_70.5 S3 ME3LB4**	153	**C803_70.5 P100 BE100LB4**	154
21.3	1218	1.3	67.7	16000	**C613_67.7 S3 ME3LB4**	146	**C613_67.7 P100 BE100LB4**	147
21.9	1225	1.9	65.9	25000	**C703_65.9 S3 ME3LB4**	150	**C703_65.9 P100 BE100LB4**	151
24.4	1097	0.9	59.0	10000	**C513_59.0 S3 ME3LB4**	142	**C513_59.0 P100 BE100LB4**	143
24.6	1055	1.5	58.6	16000	**C613_58.6 S3 ME3LB4**	146	**C613_58.6 P100 BE100LB4**	147
25.5	1051	2.2	56.5	25000	**C703_56.5 S3 ME3LB4**	150	**C703_56.5 P100 BE100LB4**	151
26.9	962	1.7	53.5	16000	**C613_53.5 S3 ME3LB4**	146	**C613_53.5 P100 BE100LB4**	147
27.6	970	2.4	52.2	25000	**C703_52.2 S3 ME3LB4**	150	**C703_52.2 P100 BE100LB4**	151
28.1	952	1.1	51.2	10000	**C513_51.2 S3 ME3LB4**	142	**C513_51.2 P100 BE100LB4**	143
30	857	1.9	47.6	16000	**C613_47.6 S3 ME3LB4**	146	**C613_47.6 P100 BE100LB4**	147
31	869	1.2	46.7	10000	**C513_46.7 S3 ME3LB4**	142	**C513_46.7 P100 BE100LB4**	143
32	831	2.8	44.7	25000	**C703_44.7 S3 ME3LB4**	150	**C703_44.7 P100 BE100LB4**	151
33	782	2.0	43.4	16000	**C613_43.4 S3 ME3LB4**	146	**C613_43.4 P100 BE100LB4**	147
33	819	0.9	43.1	10000	**C512_43.1 S3 ME3LB4**	142	**C512_43.1 P100 BE100LB4**	143
35	767	3.0	41.3	25000	**C703_41.3 S3 ME3LB4**	150	**C703_41.3 P100 BE100LB4**	151
36	753	1.3	40.5	10000	**C513_40.5 S3 ME3LB4**	142	**C513_40.5 P100 BE100LB4**	143
36	767	1.0	40.4	10000	**C512_40.4 S3 ME3LB4**	142	**C512_40.4 P100 BE100LB4**	143
38	722	1.9	38.0	16000	**C612_38.0 S3 ME3LB4**	146	**C612_38.0 P100 BE100LB4**	147
39	687	1.5	37.0	10000	**C513_37.0 S3 ME3LB4**	142	**C513_37.0 P100 BE100LB4**	143
40	691	1.1	36.4	10000	**C512_36.4 S3 ME3LB4**	142	**C512_36.4 P100 BE100LB4**	143
40	651	2.4	36.1	16000	**C613_36.1 S3 ME3LB4**	146	**C613_36.1 P100 BE100LB4**	147
42	650	1.9	34.2	16000	**C612_34.2 S3 ME3LB4**	146	**C612_34.2 P100 BE100LB4**	147
44	628	1.3	33.0	10000	**C512_33.0 S3 ME3LB4**	142	**C512_33.0 P100 BE100LB4**	143
44	594	2.6	33.0	16000	**C613_33.0 S3 ME3LB4**	146	**C613_33.0 P100 BE100LB4**	147
46	581	1.0	31.2	5550	**C413_31.2 S3 ME3LB4**	138	**C413_31.2 P100 BE100LB4**	139
47	578	2.3	30.4	15900	**C612_30.4 S3 ME3LB4**	146	**C612_30.4 P100 BE100LB4**	147
48	559	1.8	30.1	10000	**C513_30.1 S3 ME3LB4**	142	**C513_30.1 P100 BE100LB4**	143
48	566	1.4	29.8	10000	**C512_29.8 S3 ME3LB4**	142	**C512_29.8 P100 BE100LB4**	143
51	538	0.9	28.3	5460	**C412_28.3 S3 ME3LB4**	138	**C412_28.3 P100 BE100LB4**	139
52	511	1.9	27.4	10000	**C513_27.4 S3 ME3LB4**	142	**C513_27.4 P100 BE100LB4**	143
53	521	2.6	27.4	15400	**C612_27.4 S3 ME3LB4**	146	**C612_27.4 P100 BE100LB4**	147
55	487	0.9	26.2	4500	**C363_26.2 S3 ME3LB4**	134	**C363_26.2 P100 BE100LB4**	135
56	492	1.6	25.9	10000	**C512_25.9 S3 ME3LB4**	142	**C512_25.9 P100 BE100LB4**	143
57	476	1.1	25.0	5480	**C412_25.0 S3 ME3LB4**	138	**C412_25.0 P100 BE100LB4**	139
58	472	2.9	24.8	15100	**C612_24.8 S3 ME3LB4**	146	**C612_24.8 P100 BE100LB4**	147
62	444	1.8	23.4	10000	**C512_23.4 S3 ME3LB4**	142	**C512_23.4 P100 BE100LB4**	143
64	429	1.2	22.6	5420	**C412_22.6 S3 ME3LB4**	138	**C412_22.6 P100 BE100LB4**	139
64	425	3.2	22.4	14600	**C612_22.4 S3 ME3LB4**	146	**C612_22.4 P100 BE100LB4**	147
65	412	1.0	22.1	4530	**C363_22.1 S3 ME3LB4**	134	**C363_22.1 P100 BE100LB4**	135
69	398	2.0	21.0	10000	**C512_21.0 S3 ME3LB4**	142	**C512_21.0 P100 BE100LB4**	143
73	375	1.3	19.8	5390	**C412_19.8 S3 ME3LB4**	138	**C412_19.8 P100 BE100LB4**	139
76	361	1.1	19.0	4450	**C362_19.0 S3 ME3LB4**	134	**C362_19.0 P100 BE100LB4**	135
76	359	2.2	18.9	10000	**C512_18.9 S3 ME3LB4**	142	**C512_18.9 P100 BE100LB4**	143
81	338	1.4	17.8	5300	**C412_17.8 S3 ME3LB4**	138	**C412_17.8 P100 BE100LB4**	139

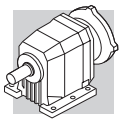

3 kW

n_2 min-1	M_2 Nm	S	i	R_{n2} N	IE2		IEC IE2	
84	327	1.2	17.2	4400	**C362_17.2 S3 ME3LB4**	134	**C362_17.2 P100 BE100LB4**	135
87	315	2.5	16.6	9790	**C512_16.6 S3 ME3LB4**	142	**C512_16.6 P100 BE100LB4**	143
91	301	1.5	15.8	5240	**C412_15.8 S3 ME3LB4**	138	**C412_15.8 P100 BE100LB4**	139
92	296	0.9	15.6	3680	**C322_15.6 S3 ME3LB4**	130	**C322_15.6 P100 BE100LB4**	131
96	284	2.8	15.0	9540	**C512_15.0 S3 ME3LB4**	142	**C512_15.0 P100 BE100LB4**	143
98	280	1.4	14.8	4340	**C362_14.8 S3 ME3LB4**	134	**C362_14.8 P100 BE100LB4**	135
101	271	1.6	14.2	5140	**C412_14.2 S3 ME3LB4**	138	**C412_14.2 P100 BE100LB4**	139
102	267	0.9	14.1	3650	**C322_14.1 S3 ME3LB4**	130	**C322_14.1 P100 BE100LB4**	131
108	253	1.5	13.3	4260	**C362_13.3 S3 ME3LB4**	134	**C362_13.3 P100 BE100LB4**	135
110	249	3.0	13.1	9200	**C512_13.1 S3 ME3LB4**	142	**C512_13.1 P100 BE100LB4**	143
116	235	1.8	12.4	5040	**C412_12.4 S3 ME3LB4**	138	**C412_12.4 P100 BE100LB4**	139
117	234	1.0	12.3	3580	**C322_12.3 S3 ME3LB4**	130	**C322_12.3 P100 BE100LB4**	131
123	222	1.7	11.7	4200	**C362_11.7 S3 ME3LB4**	134	**C362_11.7 P100 BE100LB4**	135
129	213	1.1	11.2	3520	**C322_11.2 S3 ME3LB4**	130	**C322_11.2 P100 BE100LB4**	131
129	212	2.0	11.2	4930	**C412_11.2 S3 ME3LB4**	138	**C412_11.2 P100 BE100LB4**	139
136	201	1.9	10.6	4100	**C362_10.6 S3 ME3LB4**	134	**C362_10.6 P100 BE100LB4**	135
143	190	1.6	20.1	3480	**C322_20.1 S3 ME3LB2**	130	**C322_20.1 P100 BE100L2**	131
150	182	2.1	9.6	4800	**C412_9.6 S3 ME3LB4**	138	**C412_9.6 P100 BE100LB4**	139
155	177	1.2	9.3	3450	**C322_9.3 S3 ME3LB4**	130	**C322_9.3 P100 BE100LB4**	131
158	172	1.6	18.2	3410	**C322_18.2 S3 ME3LB2**	130	**C322_18.2 P100 BE100L2**	131
164	167	2.3	8.8	3990	**C362_8.8 S3 ME3LB4**	134	**C362_8.8 P100 BE100LB4**	135
167	164	2.3	8.6	4600	**C412_8.6 S3 ME3LB4**	138	**C412_8.6 P100 BE100LB4**	139
170	161	1.3	8.5	3400	**C322_8.5 S3 ME3LB4**	130	**C322_8.5 P100 BE100LB4**	131
179	153	2.4	8.0	3840	**C362_8.0 S3 ME3LB4**	134	**C362_8.0 P100 BE100LB4**	135
182	150	1.2	15.8	1940	**C222_15.8 S3 ME3LB2**	126	**C222_15.8 P100 BE100L2**	127
185	147	1.8	15.6	3340	**C322_15.6 S3 ME3LB2**	130	**C322_15.6 P100 BE100L2**	131
201	136	1.5	7.2	3300	**C322_7.2 S3 ME3LB4**	130	**C322_7.2 P100 BE100LB4**	131
203	135	1.0	7.1	1940	**C222_7.1 S3 ME3LB4**	126	**C222_7.1 P100 BE100LB4**	127
204	134	2.6	7.1	4490	**C412_7.1 S3 ME3LB4**	138	**C412_7.1 P100 BE100LB4**	139
205	133	1.9	14.1	3250	**C322_14.1 S3 ME3LB2**	130	**C322_14.1 P100 BE100L2**	131
212	129	2.8	6.8	3780	**C362_6.8 S3 ME3LB4**	134	**C362_6.8 P100 BE100LB4**	135
226	121	2.9	6.4	4370	**C412_6.4 S3 ME3LB4**	138	**C412_6.4 P100 BE100LB4**	139
230	119	1.3	6.3	3100	**C322_6.3 S3 ME3LB4**	130	**C322_6.3 P100 BE100LB4**	131
234	116	2.1	12.3	3190	**C322_12.3 S3 ME3LB2**	130	**C322_12.3 P100 BE100L2**	131
237	116	0.9	6.1	1600	**C222_6.1 S3 ME3LB4**	126	**C222_6.1 P100 BE100LB4**	127
242	113	2.3	6.0	4090	**C412_6.0 S3 ME3LB4**	138	**C412_6.0 P100 BE100LB4**	139
246	111	1.8	5.8	3530	**C362_5.8 S3 ME3LB4**	134	**C362_5.8 P100 BE100LB4**	135
255	107	1.4	5.7	3040	**C322_5.7 S3 ME3LB4**	130	**C322_5.7 P100 BE100LB4**	131
257	106	2.2	11.2	3090	**C322_11.2 S3 ME3LB2**	130	**C322_11.2 P100 BE100L2**	131
258	106	1.0	5.6	1750	**C222_5.6 S3 ME3LB4**	126	**C222_5.6 P100 BE100LB4**	127
260	105	1.5	11.1	1850	**C222_11.1 S3 ME3LB2**	126	**C222_11.1 P100 BE100L2**	127
273	100	2.0	5.3	3380	**C362_5.3 S3 ME3LB4**	134	**C362_5.3 P100 BE100LB4**	135
291	94	1.6	5.0	2950	**C322_5.0 S3 ME3LB4**	130	**C322_5.0 P100 BE100LB4**	131
299	91	1.6	9.6	1880	**C222_9.6 S3 ME3LB2**	126	**C222_9.6 P100 BE100L2**	127
302	91	1.1	4.8	1780	**C222_4.8 S3 ME3LB4**	126	**C222_4.8 P100 BE100LB4**	127
309	89	2.9	4.7	3880	**C412_4.7 S3 ME3LB4**	138	**C412_4.7 P100 BE100LB4**	139
310	88	2.5	9.3	2990	**C322_9.3 S3 ME3LB2**	130	**C322_9.3 P100 BE100L2**	131
312	88	2.3	4.6	3270	**C362_4.6 S3 ME3LB4**	134	**C362_4.6 P100 BE100LB4**	135
320	85	1.8	4.5	2880	**C322_4.5 S3 ME3LB4**	130	**C322_4.5 P100 BE100LB4**	131
333	82	1.7	8.7	1840	**C222_8.7 S3 ME3LB2**	126	**C222_8.7 P100 BE100L2**	127
338	81	1.2	4.3	1800	**C222_4.3 S3 ME3LB4**	126	**C222_4.3 P100 BE100LB4**	127
339	80	2.6	8.5	2900	**C322_8.5 S3 ME3LB2**	130	**C322_8.5 P100 BE100L2**	131
343	80	2.5	4.2	3190	**C362_4.2 S3 ME3LB4**	134	**C362_4.2 P100 BE100LB4**	135
386	71	2.1	3.7	2780	**C322_3.7 S3 ME3LB4**	130	**C322_3.7 P100 BE100LB4**	131
388	70	1.3	3.7	1740	**C222_3.7 S3 ME3LB4**	126	**C222_3.7 P100 BE100LB4**	127
402	68	3.0	7.2	2810	**C322_7.2 S3 ME3LB2**	130	**C322_7.2 P100 BE100L2**	131
407	67	1.9	7.1	1800	**C222_7.1 S3 ME3LB2**	126	**C222_7.1 P100 BE100L2**	127

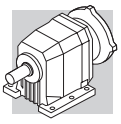

3 kW

n_2 min-1	M_2 Nm	S	i	R_{n2} N	IE2		IEC IE2	
413	66	3.0	3.5	3130	**C362_3.5 S3 ME3LB4**	134	**C362_3.5 P100 BE100LB4**	135
422	65	2.1	3.4	2690	**C322_3.4 S3 ME3LB4**	130	**C322_3.4 P100 BE100LB4**	131
433	63	1.3	3.3	1740	**C222_3.3 S3 ME3LB4**	126	**C222_3.3 P100 BE100LB4**	127
460	59	2.6	6.3	2650	**C322_6.3 S3 ME3LB2**	130	**C322_6.3 P100 BE100L2**	131
473	58	1.8	6.1	1690	**C222_6.1 S3 ME3LB2**	126	**C222_6.1 P100 BE100L2**	127
500	55	2.4	2.9	2610	**C322_2.9 S3 ME3LB4**	130	**C322_2.9 P100 BE100LB4**	131
509	53	2.9	5.7	2570	**C322_5.7 S3 ME3LB2**	130	**C322_5.7 P100 BE100L2**	131
515	53	1.9	5.6	1650	**C222_5.6 S3 ME3LB2**	126	**C222_5.6 P100 BE100L2**	127
529	52	1.5	2.7	1660	**C222_2.7 S3 ME3LB4**	126	**C222_2.7 P100 BE100LB4**	127
582	47	3.3	5.0	2500	**C322_5.0 S3 ME3LB2**	130	**C322_5.0 P100 BE100L2**	131
604	45	2.2	4.8	1620	**C222_4.8 S3 ME3LB2**	126	**C222_4.8 P100 BE100L2**	127
640	43	3.6	4.5	2400	**C322_4.5 S3 ME3LB2**	130	**C322_4.5 P100 BE100L2**	131
676	40	2.3	4.3	1580	**C222_4.3 S3 ME3LB2**	126	**C222_4.3 P100 BE100L2**	127
771	35	4.2	3.7	2320	**C322_3.7 S3 ME3LB2**	130	**C322_3.7 P100 BE100L2**	131
777	35	2.6	3.7	1540	**C222_3.7 S3 ME3LB2**	126	**C222_3.7 P100 BE100L2**	127
789	35	1.2	3.7	560	**C122_3.7 S3 ME3LB2**	122	**C122_3.7 P100 BE100L2**	123
866	31	2.7	3.3	1480	**C222_3.3 S3 ME3LB2**	126	**C222_3.3 P100 BE100L2**	127
898	30	1.3	3.2	630	**C122_3.2 S3 ME3LB2**	122	**C122_3.2 P100 BE100L2**	123
1041	26	1.4	2.8	750	**C122_2.8 S3 ME3LB2**	122	**C122_2.8 P100 BE100L2**	123
1058	26	3.1	2.7	1430	**C222_2.7 S3 ME3LB2**	126	**C222_2.7 P100 BE100L2**	127

4 kW

n_2 min-1	M_2 Nm	S	i	R_{n2} N	IE2		IEC IE2	
2.9	12214	1.0	502.6	85000	**C1004_502.6 S4 ME4SA4**	159	**C1004_502.6 P112 BE112M4**	160
3.1	11342	1.1	466.7	85000	**C1004_466.7 S4 ME4SA4**	159	**C1004_466.7 P112 BE112M4**	160
3.5	9957	1.2	409.8	85000	**C1004_409.8 S4 ME4SA4**	159	**C1004_409.8 P112 BE112M4**	160
3.8	9246	1.3	380.5	85000	**C1004_380.5 S4 ME4SA4**	159	**C1004_380.5 P112 BE112M4**	160
4.4	7864	1.5	323.6	85000	**C1004_323.6 S4 ME4SA4**	159	**C1004_323.6 P112 BE112M4**	160
4.8	7302	1.6	300.5	85000	**C1004_300.5 S4 ME4SA4**	159	**C1004_300.5 P112 BE112M4**	160
4.9	7118	1.0	292.9	60000	**C904_292.9 S4 ME4SA4**	156	**C904_292.9 P112 BE112M4**	157
5.4	6524	1.1	268.5	60000	**C904_268.5 S4 ME4SA4**	156	**C904_268.5 P112 BE112M4**	157
5.5	6391	1.9	263.0	85000	**C1004_263.0 S4 ME4SA4**	159	**C1004_263.0 P112 BE112M4**	160
5.9	5934	2.0	244.2	85000	**C1004_244.2 S4 ME4SA4**	159	**C1004_244.2 P112 BE112M4**	160
6.2	5630	1.3	231.7	60000	**C904_231.7 S4 ME4SA4**	156	**C904_231.7 P112 BE112M4**	157
6.8	5161	1.4	212.4	60000	**C904_212.4 S4 ME4SA4**	156	**C904_212.4 P112 BE112M4**	157
7.2	4851	2.5	199.6	85000	**C1004_199.6 S4 ME4SA4**	159	**C1004_199.6 P112 BE112M4**	160
7.8	4504	2.7	185.4	85000	**C1004_185.4 S4 ME4SA4**	159	**C1004_185.4 P112 BE112M4**	160
8.4	4322	1.7	172.1	60000	**C903_172.1 S4 ME4SA4**	156	**C903_172.1 P112 BE112M4**	157
8.5	4243	0.9	169.0	35000	**C803_169.0 S4 ME4SA4**	153	**C803_169.0 P112 BE112M4**	154
9.1	3961	1.8	157.8	60000	**C903_157.8 S4 ME4SA4**	156	**C903_157.8 P112 BE112M4**	157
9.7	3744	1.1	149.1	35000	**C803_149.1 S4 ME4SA4**	153	**C803_149.1 P112 BE112M4**	154
9.8	3674	2.0	146.3	60000	**C903_146.3 S4 ME4SA4**	156	**C903_146.3 P112 BE112M4**	157
10.5	3432	1.2	136.7	35000	**C803_136.7 S4 ME4SA4**	153	**C803_136.7 P112 BE112M4**	154
10.7	3368	2.1	134.1	60000	**C903_134.1 S4 ME4SA4**	156	**C903_134.1 P112 BE112M4**	157
12.1	3000	1.3	119.5	35000	**C803_119.5 S4 ME4SA4**	153	**C803_119.5 P112 BE112M4**	154
12.3	2931	2.5	116.7	60000	**C903_116.7 S4 ME4SA4**	156	**C903_116.7 P112 BE112M4**	157
13.2	2750	1.5	109.5	35000	**C803_109.5 S4 ME4SA4**	153	**C803_109.5 P112 BE112M4**	154
13.5	2687	2.6	107.0	60000	**C903_107.0 S4 ME4SA4**	156	**C903_107.0 P112 BE112M4**	157
14.8	2445	1.6	97.4	35000	**C803_97.4 S4 ME4SA4**	153	**C803_97.4 P112 BE112M4**	154
15.0	2417	3.0	96.2	60000	**C903_96.2 S4 ME4SA4**	156	**C903_96.2 P112 BE112M4**	157
16.1	2242	1.8	89.3	35000	**C803_89.3 S4 ME4SA4**	153	**C803_89.3 P112 BE112M4**	154
16.3	2215	1.0	88.2	25000	**C703_88.2 S4 ME4SA4**	150	**C703_88.2 P112 BE112M4**	151

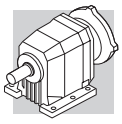

4 kW

n_2 min-1	M_2 Nm	S	i	R_{n2} N	IE2		IEC IE2	
17.7	2044	1.1	81.4	25000	**C703_81.4 S4 ME4SA4**	150	**C703_81.4 P112 BE112M4**	151
18.7	1931	2.1	76.9	35000	**C803_76.9 S4 ME4SA4**	153	**C803_76.9 P112 BE112M4**	154
20.2	1791	1.3	71.3	25000	**C703_71.3 S4 ME4SA4**	150	**C703_71.3 P112 BE112M4**	151
20.4	1770	2.3	70.5	35000	**C803_70.5 S4 ME4SA4**	153	**C803_70.5 P112 BE112M4**	154
21.3	1645	1.0	67.7	16000	**C613_67.7 S4 ME4SA4**	146	**C613_67.7 P112 BE112M4**	147
21.9	1654	1.4	65.9	25000	**C703_65.9 S4 ME4SA4**	150	**C703_65.9 P112 BE112M4**	151
23.0	1570	2.5	62.5	35000	**C803_62.5 S4 ME4SA4**	153	**C803_62.5 P112 BE112M4**	154
24.6	1424	1.1	58.6	16000	**C613_58.6 S4 ME4SA4**	146	**C613_58.6 P112 BE112M4**	147
25.1	1439	2.8	57.3	35000	**C803_57.3 S4 ME4SA4**	153	**C803_57.3 P112 BE112M4**	154
25.5	1419	1.6	56.5	25000	**C703_56.5 S4 ME4SA4**	150	**C703_56.5 P112 BE112M4**	151
26.9	1299	1.2	53.5	16000	**C613_53.5 S4 ME4SA4**	146	**C613_53.5 P112 BE112M4**	147
27.6	1310	1.8	52.2	25000	**C703_52.2 S4 ME4SA4**	150	**C703_52.2 P112 BE112M4**	151
30	1157	1.4	47.6	16000	**C613_47.6 S4 ME4SA4**	146	**C613_47.6 P112 BE112M4**	147
30	1191	3.2	47.4	35000	**C803_47.4 S4 ME4SA4**	153	**C803_47.4 P112 BE112M4**	154
32	1122	2.0	44.7	25000	**C703_44.7 S4 ME4SA4**	150	**C703_44.7 P112 BE112M4**	151
33	1092	3.5	43.5	35000	**C803_43.5 S4 ME4SA4**	153	**C803_43.5 P112 BE112M4**	154
33	1056	1.5	43.4	16000	**C613_43.4 S4 ME4SA4**	146	**C613_43.4 P112 BE112M4**	147
35	1036	2.2	41.3	25000	**C703_41.3 S4 ME4SA4**	150	**C703_41.3 P112 BE112M4**	151
36	1016	1.0	40.5	10000	**C513_40.5 S4 ME4SA4**	142	**C513_40.5 P112 BE112M4**	143
38	975	1.4	38.0	16000	**C612_38.0 S4 ME4SA4**	146	**C612_38.0 P112 BE112M4**	147
39	928	1.1	37.0	10000	**C513_37.0 S4 ME4SA4**	142	**C513_37.0 P112 BE112M4**	143
40	878	1.8	36.1	15700	**C613_36.1 S4 ME4SA4**	146	**C613_36.1 P112 BE112M4**	147
41	891	2.4	34.7	23400	**C702_34.7 S4 ME4SA4**	150	**C702_34.7 P112 BE112M4**	151
42	878	1.4	34.2	15700	**C612_34.2 S4 ME4SA4**	146	**C612_34.2 P112 BE112M4**	147
44	847	0.9	33.0	10000	**C512_33.0 S4 ME4SA4**	142	**C512_33.0 P112 BE112M4**	143
44	801	1.9	33.0	15500	**C613_33.0 S4 ME4SA4**	146	**C613_33.0 P112 BE112M4**	147
47	781	1.7	30.4	15300	**C612_30.4 S4 ME4SA4**	146	**C612_30.4 P112 BE112M4**	147
48	755	1.3	30.1	9880	**C513_30.1 S4 ME4SA4**	142	**C513_30.1 P112 BE112M4**	143
48	764	1.0	29.8	10000	**C512_29.8 S4 ME4SA4**	142	**C512_29.8 P112 BE112M4**	143
52	711	3.0	27.7	22300	**C702_27.7 S4 ME4SA4**	150	**C702_27.7 P112 BE112M4**	151
52	689	1.4	27.4	9550	**C513_27.4 S4 ME4SA4**	142	**C513_27.4 P112 BE112M4**	143
53	703	1.9	27.4	14900	**C612_27.4 S4 ME4SA4**	146	**C612_27.4 P112 BE112M4**	147
54	651	2.2	26.8	14700	**C613_26.8 S4 ME4SA4**	146	**C613_26.8 P112 BE112M4**	147
56	665	1.2	25.9	10000	**C512_25.9 S4 ME4SA4**	142	**C512_25.9 P112 BE112M4**	143
58	637	2.1	24.8	14600	**C612_24.8 S4 ME4SA4**	146	**C612_24.8 P112 BE112M4**	147
60	600	1.5	23.9	9250	**C513_23.9 S4 ME4SA4**	142	**C513_23.9 P112 BE112M4**	143
62	599	1.3	23.4	10000	**C512_23.4 S4 ME4SA4**	142	**C512_23.4 P112 BE112M4**	143
64	573	2.4	22.4	14200	**C612_22.4 S4 ME4SA4**	146	**C612_22.4 P112 BE112M4**	147
69	538	1.5	21.0	9920	**C512_21.0 S4 ME4SA4**	142	**C512_21.0 P112 BE112M4**	143
73	507	1.0	19.8	4760	**C412_19.8 S4 ME4SA4**	138	**C412_19.8 P112 BE112M4**	139
73	503	2.7	19.6	13800	**C612_19.6 S4 ME4SA4**	146	**C612_19.6 P112 BE112M4**	147
76	485	1.7	18.9	9730	**C512_18.9 S4 ME4SA4**	142	**C512_18.9 P112 BE112M4**	143
81	456	1.1	17.8	4720	**C412_17.8 S4 ME4SA4**	138	**C412_17.8 P112 BE112M4**	139
82	453	3.0	17.7	13400	**C612_17.7 S4 ME4SA4**	146	**C612_17.7 P112 BE112M4**	147
87	426	1.9	16.6	9440	**C512_16.6 S4 ME4SA4**	142	**C512_16.6 P112 BE112M4**	143
90	409	3.3	15.9	13100	**C612_15.9 S4 ME4SA4**	146	**C612_15.9 P112 BE112M4**	147
91	406	1.1	15.8	4740	**C412_15.8 S4 ME4SA4**	138	**C412_15.8 P112 BE112M4**	139
96	384	2.1	15.0	9230	**C512_15.0 S4 ME4SA4**	142	**C512_15.0 P112 BE112M4**	143
98	378	1.0	14.8	3880	**C362_14.8 S4 ME4SA4**	134	**C362_14.8 P112 BE112M4**	135
101	365	1.2	14.2	4690	**C412_14.2 S4 ME4SA4**	138	**C412_14.2 P112 BE112M4**	139
108	342	1.1	13.3	3840	**C362_13.3 S4 ME4SA4**	134	**C362_13.3 P112 BE112M4**	135
110	337	2.2	13.1	8930	**C512_13.1 S4 ME4SA4**	142	**C512_13.1 P112 BE112M4**	143
116	318	1.3	12.4	4660	**C412_12.4 S4 ME4SA4**	138	**C412_12.4 P112 BE112M4**	139
122	304	2.5	11.8	8720	**C512_11.8 S4 ME4SA4**	142	**C512_11.8 P112 BE112M4**	143
123	299	1.3	11.7	3840	**C362_11.7 S4 ME4SA4**	134	**C362_11.7 P112 BE112M4**	135
129	286	1.5	11.2	4580	**C412_11.2 S4 ME4SA4**	138	**C412_11.2 P112 BE112M4**	139
136	272	1.4	10.6	3780	**C362_10.6 S4 ME4SA4**	134	**C362_10.6 P112 BE112M4**	135

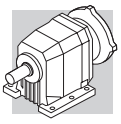

4 kW

n_2 min-1	M_2 Nm	S	i	R_{n2} N	IE2		IEC IE2	
148	250	2.7	9.8	8290	**C512_9.8 S4 ME4SA4**	142	**C512_9.8 P112 BE112M4**	143
150	246	1.6	9.6	4510	**C412_9.6 S4 ME4SA4**	138	**C412_9.6 P112 BE112M4**	139
155	238	0.9	9.3	3150	**C322_9.3 S4 ME4SA4**	130	**C322_9.3 P112 BE112M4**	131
164	226	1.7	8.8	3720	**C362_8.8 S4 ME4SA4**	134	**C362_8.8 P112 BE112M4**	135
164	225	3.0	8.8	8070	**C512_8.8 S4 ME4SA4**	142	**C512_8.8 P112 BE112M4**	143
167	222	1.7	8.6	4420	**C412_8.6 S4 ME4SA4**	138	**C412_8.6 P112 BE112M4**	139
170	218	1.0	8.5	3110	**C322_8.5 S4 ME4SA4**	130	**C322_8.5 P112 BE112M4**	131
179	206	1.8	8.0	3650	**C362_8.0 S4 ME4SA4**	134	**C362_8.0 P112 BE112M4**	135
186	199	3.2	7.8	7800	**C512_7.8 S4 ME4SA4**	142	**C512_7.8 P112 BE112M4**	143
186	195	1.4	15.6	3090	**C322_15.6 S4 ME4SA2**	130	**C322_15.6 P112 BE112M2**	131
201	184	1.1	7.2	3070	**C322_7.2 S4 ME4SA4**	130	**C322_7.2 P112 BE112M4**	131
204	181	2.0	7.1	4280	**C412_7.1 S4 ME4SA4**	138	**C412_7.1 P112 BE112M4**	139
206	176	1.4	14.1	3040	**C322_14.1 S4 ME4SA2**	130	**C322_14.1 P112 BE112M2**	131
206	179	3.5	7.0	7580	**C512_7.0 S4 ME4SA4**	142	**C512_7.0 P112 BE112M4**	143
212	174	2.0	6.8	3580	**C362_6.8 S4 ME4SA4**	134	**C362_6.8 P112 BE112M4**	135
226	163	2.1	6.4	4180	**C412_6.4 S4 ME4SA4**	138	**C412_6.4 P112 BE112M4**	139
230	161	1.0	6.3	2840	**C322_6.3 S4 ME4SA4**	130	**C322_6.3 P112 BE112M4**	131
235	154	1.6	12.3	2990	**C322_12.3 S4 ME4SA2**	130	**C322_12.3 P112 BE112M2**	131
242	153	1.7	6.0	3840	**C412_6.0 S4 ME4SA4**	138	**C412_6.0 P112 BE112M4**	139
246	150	1.3	5.8	3310	**C362_5.8 S4 ME4SA4**	134	**C362_5.8 P112 BE112M4**	135
255	145	1.1	5.7	2780	**C322_5.7 S4 ME4SA4**	130	**C322_5.7 P112 BE112M4**	131
259	140	1.6	11.2	2900	**C322_11.2 S4 ME4SA2**	130	**C322_11.2 P112 BE112M2**	131
273	135	1.5	5.3	3200	**C362_5.3 S4 ME4SA4**	134	**C362_5.3 P112 BE112M4**	135
291	127	1.2	5.0	2760	**C322_5.0 S4 ME4SA4**	130	**C322_5.0 P112 BE112M4**	131
301	121	1.2	9.6	1680			**C222_9.6 P112 BE112M2**	127
309	120	2.2	4.7	3500	**C412_4.7 S4 ME4SA4**	138	**C412_4.7 P112 BE112M4**	139
312	119	1.7	4.6	3180	**C362_4.6 S4 ME4SA4**	134	**C362_4.6 P112 BE112M4**	135
312	116	1.9	9.3	2840	**C322_9.3 S4 ME4SA2**	130	**C322_9.3 P112 BE112M2**	131
320	115	1.3	4.5	2690	**C322_4.5 S4 ME4SA4**	130	**C322_4.5 P112 BE112M4**	131
335	108	1.3	8.7	1660			**C222_8.7 P112 BE112M2**	127
338	109	0.9	4.3	1300			**C222_4.3 P112 BE112M4**	127
342	106	2.0	8.5	2750	**C322_8.5 S4 ME4SA2**	130	**C322_8.5 P112 BE112M2**	131
343	108	1.9	4.2	3060	**C362_4.2 S4 ME4SA4**	134	**C362_4.2 P112 BE112M4**	135
386	96	1.6	3.7	2640	**C322_3.7 S4 ME4SA4**	130	**C322_3.7 P112 BE112M4**	131
388	95	0.9	3.7	1560			**C222_3.7 P112 BE112M4**	127
399	93	2.8	3.6	3180	**C412_3.6 S4 ME4SA4**	138	**C412_3.6 P112 BE112M4**	139
405	90	2.2	7.2	2690	**C322_7.2 S4 ME4SA2**	130	**C322_7.2 P112 BE112M2**	131
409	89	1.5	7.1	1650			**C222_7.1 P112 BE112M2**	127
413	89	2.2	3.5	3010	**C362_3.5 S4 ME4SA4**	134	**C362_3.5 P112 BE112M4**	135
422	87	1.6	3.4	2580	**C322_3.4 S4 ME4SA4**	130	**C322_3.4 P112 BE112M4**	131
433	85	1.0	3.3	1540			**C222_3.3 P112 BE112M4**	127
453	82	2.5	3.2	2890	**C362_3.2 S4 ME4SA4**	134	**C362_3.2 P112 BE112M4**	135
463	78	2.0	6.3	2530	**C322_6.3 S4 ME4SA2**	130	**C322_6.3 P112 BE112M2**	131
476	76	1.4	6.1	1540			**C222_6.1 P112 BE112M2**	127
500	74	1.8	2.9	2500	**C322_2.9 S4 ME4SA4**	130	**C322_2.9 P112 BE112M4**	131
519	70	1.5	5.6	1520			**C222_5.6 P112 BE112M2**	127
529	70	1.1	2.7	1530			**C222_2.7 P112 BE112M4**	127
536	69	2.9	2.7	2840	**C362_2.7 S4 ME4SA4**	134	**C362_2.7 P112 BE112M4**	135
586	62	2.4	5.0	2410	**C322_5.0 S4 ME4SA2**	130	**C322_5.0 P112 BE112M2**	131
608	60	1.7	4.8	1500			**C222_4.8 P112 BE112M2**	127
644	56	2.7	4.5	2330	**C322_4.5 S4 ME4SA2**	130	**C322_4.5 P112 BE112M2**	131
681	53	1.8	4.3	1470			**C222_4.3 P112 BE112M2**	127
776	47	3.2	3.7	2250	**C322_3.7 S4 ME4SA2**	130	**C322_3.7 P112 BE112M2**	131
782	46	1.9	3.7	1450			**C222_3.7 P112 BE112M2**	127
851	43	3.2	3.4	2170	**C322_3.4 S4 ME4SA2**	130	**C322_3.4 P112 BE112M2**	131
872	42	2.0	3.3	1410			**C222_3.3 P112 BE112M2**	127
1007	36	3.6	2.9	2100	**C322_2.9 S4 ME4SA2**	130	**C322_2.9 P112 BE112M2**	131
1065	34	2.3	2.7	1370			**C222_2.7 P112 BE112M2**	127

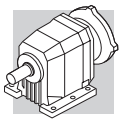

5.5 kW

n_2 min-1	M_2 Nm	S	i	R_{n2} N	IE2	IE3		IE2	IE3	
3.6	13276	0.9	409.8	85000	C1004_409.8 S4 ME4SB4	C1004_409.8 S4 MX4SB4	159	C1004_409.8 P132 BE132S4	C1004_409.8 P132 BX132S4	160
3.8	12328	1.0	380.5	85000	C1004_380.5 S4 ME4SB4	C1004_380.5 S4 MX4SB4	159	C1004_380.5 P132 BE132S4	C1004_380.5 P132 BX132S4	160
4.5	10485	1.1	323.6	85000	C1004_323.6 S4 ME4SB4	C1004_323.6 S4 MX4SB4	159	C1004_323.6 P132 BE132S4	C1004_323.6 P132 BX132S4	160
4.9	9736	1.2	300.5	85000	C1004_300.5 S4 ME4SB4	C1004_300.5 S4 MX4SB4	159	C1004_300.5 P132 BE132S4	C1004_300.5 P132 BX132S4	160
5.6	8521	1.4	263.0	85000	C1004_263.0 S4 ME4SB4	C1004_263.0 S4 MX4SB4	159	C1004_263.0 P132 BE132S4	C1004_263.0 P132 BX132S4	160
6.0	7913	1.5	244.2	85000	C1004_244.2 S4 ME4SB4	C1004_244.2 S4 MX4SB4	159	C1004_244.2 P132 BE132S4	C1004_244.2 P132 BX132S4	160
6.3	7507	1.0	231.7	60000	C904_231.7 S4 ME4SB4	C904_231.7 S4 MX4SB4	156	C904_231.7 P132 BE132S4	C904_231.7 P132 BX132S4	157
6.9	6881	1.0	212.4	60000	C904_212.4 S4 ME4SB4	C904_212.4 S4 MX4SB4	156	C904_212.4 P132 BE132S4	C904_212.4 P132 BX132S4	157
7.3	6468	1.9	199.6	85000	C1004_199.6 S4 ME4SB4	C1004_199.6 S4 MX4SB4	159	C1004_199.6 P132 BE132S4	C1004_199.6 P132 BX132S4	160
7.9	6006	2.0	185.4	85000	C1004_185.4 S4 ME4SB4	C1004_185.4 S4 MX4SB4	159	C1004_185.4 P132 BE132S4	C1004_185.4 P132 BX132S4	160
8.5	5762	1.2	172.1	60000	C903_172.1 S4 ME4SB4	C903_172.1 S4 MX4SB4	156	C903_172.1 P132 BE132S4	C903_172.1 P132 BX132S4	157
9.0	5252	2.3	162.1	85000	C1004_162.1 S4 ME4SB4	C1004_162.1 S4 MX4SB4	159	C1004_162.1 P132 BE132S4	C1004_162.1 P132 BX132S4	160
9.3	5282	1.3	157.8	60000	C903_157.8 S4 ME4SB4	C903_157.8 S4 MX4SB4	156	C903_157.8 P132 BE132S4	C903_157.8 P132 BX132S4	157
9.7	5036	2.4	150.4	85000	C1003_150.4 S4 ME4SB4	C1003_150.4 S4 MX4SB4	159	C1003_150.4 P132 BE132S4	C1003_150.4 P132 BX132S4	160
10.0	4899	1.5	146.3	60000	C903_146.3 S4 ME4SB4	C903_146.3 S4 MX4SB4	156	C903_146.3 P132 BE132S4	C903_146.3 P132 BX132S4	157
10.5	4677	2.4	139.7	85000	C1003_139.7 S4 ME4SB4	C1003_139.7 S4 MX4SB4	159	C1003_139.7 P132 BE132S4	C1003_139.7 P132 BX132S4	160
10.9	4491	1.6	134.1	60000	C903_134.1 S4 ME4SB4	C903_134.1 S4 MX4SB4	156	C903_134.1 P132 BE132S4	C903_134.1 P132 BX132S4	157
12.1	4035	3.0	120.5	85000	C1003_120.5 S4 ME4SB4	C1003_120.5 S4 MX4SB4	159	C1003_120.5 P132 BE132S4	C1003_120.5 P132 BX132S4	160
12.2	3999	1.0	119.5	35000	C803_119.5 S4 ME4SB4	C803_119.5 S4 MX4SB4	153	C803_119.5 P132 BE132S4	C803_119.5 P132 BX132S4	154
12.5	3908	1.8	116.7	60000	C903_116.7 S4 ME4SB4	C903_116.7 S4 MX4SB4	156	C903_116.7 P132 BE132S4	C903_116.7 P132 BX132S4	157
13.3	3666	1.1	109.5	35000	C803_109.5 S4 ME4SB4	C803_109.5 S4 MX4SB4	153	C803_109.5 P132 BE132S4	C803_109.5 P132 BX132S4	154
13.6	3582	2.0	107.0	60000	C903_107.0 S4 ME4SB4	C903_107.0 S4 MX4SB4	156	C903_107.0 P132 BE132S4	C903_107.0 P132 BX132S4	157
15.0	3260	1.2	97.4	35000	C803_97.4 S4 ME4SB4	C803_97.4 S4 MX4SB4	153	C803_97.4 P132 BE132S4	C803_97.4 P132 BX132S4	154
15.2	3222	2.2	96.2	60000	C903_96.2 S4 ME4SB4	C903_96.2 S4 MX4SB4	156	C903_96.2 P132 BE132S4	C903_96.2 P132 BX132S4	157
16.4	2989	1.3	89.3	35000	C803_89.3 S4 ME4SB4	C803_89.3 S4 MX4SB4	153	C803_89.3 P132 BE132S4	C803_89.3 P132 BX132S4	154
16.5	2954	2.4	88.2	60000	C903_88.2 S4 ME4SB4	C903_88.2 S4 MX4SB4	156	C903_88.2 P132 BE132S4	C903_88.2 P132 BX132S4	157
18.0	2719	2.6	81.2	59100	C903_81.2 S4 ME4SB4	C903_81.2 S4 MX4SB4	156	C903_81.2 P132 BE132S4	C903_81.2 P132 BX132S4	157
19.0	2575	1.6	76.9	35000	C803_76.9 S4 ME4SB4	C803_76.9 S4 MX4SB4	153	C803_76.9 P132 BE132S4	C803_76.9 P132 BX132S4	154
19.6	2492	2.8	74.4	58200	C903_74.4 S4 ME4SB4	C903_74.4 S4 MX4SB4	156	C903_74.4 P132 BE132S4	C903_74.4 P132 BX132S4	157
20.5	2388	1.0	71.3	25000	C703_71.3 S4 ME4SB4	C703_71.3 S4 MX4SB4	150	C703_71.3 P132 BE132S4	C703_71.3 P132 BX132S4	151
20.7	2360	1.7	70.5	35000	C803_70.5 S4 ME4SB4	C803_70.5 S4 MX4SB4	153	C803_70.5 P132 BE132S4	C803_70.5 P132 BX132S4	154
22.2	2205	1.0	65.9	25000	C703_65.9 S4 ME4SB4	C703_65.9 S4 MX4SB4	150	C703_65.9 P132 BE132S4	C703_65.9 P132 BX132S4	151
23.4	2093	1.9	62.5	35000	C803_62.5 S4 ME4SB4	C803_62.5 S4 MX4SB4	153	C803_62.5 P132 BE132S4	C803_62.5 P132 BX132S4	154
25.5	1918	2.1	57.3	35000	C803_57.3 S4 ME4SB4	C803_57.3 S4 MX4SB4	153	C803_57.3 P132 BE132S4	C803_57.3 P132 BX132S4	154
25.8	1892	1.2	56.5	25000	C703_56.5 S4 ME4SB4	C703_56.5 S4 MX4SB4	150	C703_56.5 P132 BE132S4	C703_56.5 P132 BX132S4	151
27.3	1732	0.9	53.5	15000	C613_53.5 S4 ME4SB4	C613_53.5 S4 MX4SB4	146	C613_53.5 P132 BE132S4	C613_53.5 P132 BX132S4	147
28.0	1746	1.3	52.2	24700	C703_52.2 S4 ME4SB4	C703_52.2 S4 MX4SB4	150	C703_52.2 P132 BE132S4	C703_52.2 P132 BX132S4	151
31	1543	1.0	47.6	15300	C613_47.6 S4 ME4SB4	C613_47.6 S4 MX4SB4	146	C613_47.6 P132 BE132S4	C613_47.6 P132 BX132S4	147
31	1588	2.4	47.4	35000	C803_47.4 S4 ME4SB4	C803_47.4 S4 MX4SB4	153	C803_47.4 P132 BE132S4	C803_47.4 P132 BX132S4	154
33	1497	1.5	44.7	24100	C703_44.7 S4 ME4SB4	C703_44.7 S4 MX4SB4	150	C703_44.7 P132 BE132S4	C703_44.7 P132 BX132S4	151
34	1456	2.6	43.5	35000	C803_43.5 S4 ME4SB4	C803_43.5 S4 MX4SB4	153	C803_43.5 P132 BE132S4	C803_43.5 P132 BX132S4	154
34	1408	1.1	43.4	15000	C613_43.4 S4 ME4SB4	C613_43.4 S4 MX4SB4	146	C613_43.4 P132 BE132S4	C613_43.4 P132 BX132S4	147
35	1381	1.7	41.3	23800	C703_41.3 S4 ME4SB4	C703_41.3 S4 MX4SB4	150	C703_41.3 P132 BE132S4	C703_41.3 P132 BX132S4	151
37	1338	2.4	39.1	35000	C802_39.1 S4 ME4SB4	C802_39.1 S4 MX4SB4	153	C802_39.1 P132 BE132S4	C802_39.1 P132 BX132S4	154
38	1300	1.0	38.0	14800	C612_38.0 S4 ME4SB4	C612_38.0 S4 MX4SB4	146	C612_38.0 P132 BE132S4	C612_38.0 P132 BX132S4	147
40	1171	1.3	36.1	14800	C613_36.1 S4 ME4SB4	C613_36.1 S4 MX4SB4	146	C613_36.1 P132 BE132S4	C613_36.1 P132 BX132S4	147
42	1188	1.8	34.7	22100	C702_34.7 S4 ME4SB4	C702_34.7 S4 MX4SB4	150	C702_34.7 P132 BE132S4	C702_34.7 P132 BX132S4	151
43	1170	1.0	34.2	14500	C612_34.2 S4 ME4SB4	C612_34.2 S4 MX4SB4	146	C612_34.2 P132 BE132S4	C612_34.2 P132 BX132S4	147
44	1068	1.4	33.0	14500	C613_33.0 S4 ME4SB4	C613_33.0 S4 MX4SB4	146	C613_33.0 P132 BE132S4	C613_33.0 P132 BX132S4	147
47	1072	3.5	31.3	33400	C802_31.3 S4 ME4SB4	C802_31.3 S4 MX4SB4	153	C802_31.3 P132 BE132S4	C802_31.3 P132 BX132S4	154
48	1041	1.3	30.4	14300	C612_30.4 S4 ME4SB4	C612_30.4 S4 MX4SB4	146	C612_30.4 P132 BE132S4	C612_30.4 P132 BX132S4	147
49	1006	1.0	30.1	9610	C513_30.1 S4 ME4SB4	C513_30.1 S4 MX4SB4	142	C513_30.1 P132 BE132S4	C513_30.1 P132 BX132S4	143
53	948	2.2	27.7	21200	C702_27.7 S4 ME4SB4	C702_27.7 S4 MX4SB4	150	C702_27.7 P132 BE132S4	C702_27.7 P132 BX132S4	151
53	919	1.1	27.4	9490	C513_27.4 S4 ME4SB4	C513_27.4 S4 MX4SB4	142	C513_27.4 P132 BE132S4	C513_27.4 P132 BX132S4	143
53	938	1.4	27.4	13900	C612_27.4 S4 ME4SB4	C612_27.4 S4 MX4SB4	146	C612_27.4 P132 BE132S4	C612_27.4 P132 BX132S4	147
56	886	0.9	25.9	9350	C512_25.9 S4 ME4SB4	C512_25.9 S4 MX4SB4	142	C512_25.9 P132 BE132S4	C512_25.9 P132 BX132S4	143
59	849	1.6	24.8	13700	C612_24.8 S4 ME4SB4	C612_24.8 S4 MX4SB4	146	C612_24.8 P132 BE132S4	C612_24.8 P132 BX132S4	147

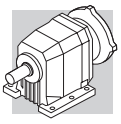

5.5 kW

n_2 min-1	M_2 Nm	S	i	R_{n2} N	IE2	IE3		IE2	IE3	
61	800	1.2	23.9	9540	**C513_23.9 S4 ME4SB4**	**C513_23.9 S4 MX4SB4**	142	**C513_23.9 P132 BE132S4**	**C513_23.9 P132 BX132S4**	143
63	799	1.0	23.4	9310	**C512_23.4 S4 ME4SB4**	**C512_23.4 S4 MX4SB4**	142	**C512_23.4 P132 BE132S4**	**C512_23.4 P132 BX132S4**	143
64	782	2.7	22.9	20400	**C702_22.9 S4 ME4SB4**	**C702_22.9 S4 MX4SB4**	150	**C702_22.9 P132 BE132S4**	**C702_22.9 P132 BX132S4**	151
65	764	1.8	22.4	13400	**C612_22.4 S4 ME4SB4**	**C612_22.4 S4 MX4SB4**	146	**C612_22.4 P132 BE132S4**	**C612_22.4 P132 BX132S4**	147
70	717	1.1	21.0	9150	**C512_21.0 S4 ME4SB4**	**C512_21.0 S4 MX4SB4**	142	**C512_21.0 P132 BE132S4**	**C512_21.0 P132 BX132S4**	143
74	670	2.0	19.6	13100	**C612_19.6 S4 ME4SB4**	**C612_19.6 S4 MX4SB4**	146	**C612_19.6 P132 BE132S4**	**C612_19.6 P132 BX132S4**	147
76	660	3.2	19.3	19700	**C702_19.3 S4 ME4SB4**	**C702_19.3 S4 MX4SB4**	150	**C702_19.3 P132 BE132S4**	**C702_19.3 P132 BX132S4**	151
77	646	1.2	18.9	9030	**C512_18.9 S4 ME4SB4**	**C512_18.9 S4 MX4SB4**	142	**C512_18.9 P132 BE132S4**	**C512_18.9 P132 BX132S4**	143
83	604	2.2	17.7	12700	**C612_17.7 S4 ME4SB4**	**C612_17.7 S4 MX4SB4**	146	**C612_17.7 P132 BE132S4**	**C612_17.7 P132 BX132S4**	147
88	568	1.4	16.6	8810	**C512_16.6 S4 ME4SB4**	**C512_16.6 S4 MX4SB4**	142	**C512_16.6 P132 BE132S4**	**C512_16.6 P132 BX132S4**	143
92	545	2.5	15.9	12500	**C612_15.9 S4 ME4SB4**	**C612_15.9 S4 MX4SB4**	146	**C612_15.9 P132 BE132S4**	**C612_15.9 P132 BX132S4**	147
98	512	1.6	15.0	8660	**C512_15.0 S4 ME4SB4**	**C512_15.0 S4 MX4SB4**	142	**C512_15.0 P132 BE132S4**	**C512_15.0 P132 BX132S4**	143
102	491	2.8	14.3	12100	**C612_14.3 S4 ME4SB4**	**C612_14.3 S4 MX4SB4**	146	**C612_14.3 P132 BE132S4**	**C612_14.3 P132 BX132S4**	147
102	487	0.9	14.2	4000	**C412_14.2 S4 ME4SB4**	**C412_14.2 S4 MX4SB4**	138	**C412_14.2 P132 BE132S4**	**C412_14.2 P132 BX132S4**	139
111	449	1.7	13.1	8420	**C512_13.1 S4 ME4SB4**	**C512_13.1 S4 MX4SB4**	142	**C512_13.1 P132 BE132S4**	**C512_13.1 P132 BX132S4**	143
118	424	1.0	12.4	4060	**C412_12.4 S4 ME4SB4**	**C412_12.4 S4 MX4SB4**	138	**C412_12.4 P132 BE132S4**	**C412_12.4 P132 BX132S4**	139
121	414	3.3	12.1	11600	**C612_12.1 S4 ME4SB4**	**C612_12.1 S4 MX4SB4**	146	**C612_12.1 P132 BE132S4**	**C612_12.1 P132 BX132S4**	147
123	405	1.9	11.8	8250	**C512_11.8 S4 ME4SB4**	**C512_11.8 S4 MX4SB4**	142	**C512_11.8 P132 BE132S4**	**C512_11.8 P132 BX132S4**	143
125	399	1.0	11.7	3380	**C362_11.7 S4 ME4SB4**	**C362_11.7 S4 MX4SB4**	134	**C362_11.7 P132 BE132S4**	**C362_11.7 P132 BX132S4**	135
131	382	1.1	11.2	4030	**C412_11.2 S4 ME4SB4**	**C412_11.2 S4 MX4SB4**	138	**C412_11.2 P132 BE132S4**	**C412_11.2 P132 BX132S4**	139
138	363	1.0	10.6	3350	**C362_10.6 S4 ME4SB4**	**C362_10.6 S4 MX4SB4**	134	**C362_10.6 P132 BE132S4**	**C362_10.6 P132 BX132S4**	135
150	334	2.1	9.8	7890	**C512_9.8 S4 ME4SB4**	**C512_9.8 S4 MX4SB4**	142	**C512_9.8 P132 BE132S4**	**C512_9.8 P132 BX132S4**	143
152	328	1.2	9.6	4030	**C412_9.6 S4 ME4SB4**	**C412_9.6 S4 MX4SB4**	138	**C412_9.6 P132 BE132S4**	**C412_9.6 P132 BX132S4**	139
166	301	1.3	8.8	3350	**C362_8.8 S4 ME4SB4**	**C362_8.8 S4 MX4SB4**	134	**C362_8.8 P132 BE132S4**	**C362_8.8 P132 BX132S4**	135
166	301	2.3	8.8	7700	**C512_8.8 S4 ME4SB4**	**C512_8.8 S4 MX4SB4**	142	**C512_8.8 P132 BE132S4**	**C512_8.8 P132 BX132S4**	143
182	275	1.3	8.0	3330	**C362_8.0 S4 ME4SB4**	**C362_8.0 S4 MX4SB4**	134	**C362_8.0 P132 BE132S4**	**C362_8.0 P132 BX132S4**	135
188	265	2.4	7.8	7460	**C512_7.8 S4 ME4SB4**	**C512_7.8 S4 MX4SB4**	142	**C512_7.8 P132 BE132S4**	**C512_7.8 P132 BX132S4**	143
207	242	1.5	7.1	3920	**C412_7.1 S4 ME4SB4**	**C412_7.1 S4 MX4SB4**	138	**C412_7.1 P132 BE132S4**	**C412_7.1 P132 BX132S4**	139
209	239	2.6	7.0	7280	**C512_7.0 S4 ME4SB4**	**C512_7.0 S4 MX4SB4**	142	**C512_7.0 P132 BE132S4**	**C512_7.0 P132 BX132S4**	143
215	232	1.5	6.8	3280	**C362_6.8 S4 ME4SB4**	**C362_6.8 S4 MX4SB4**	134	**C362_6.8 P132 BE132S4**	**C362_6.8 P132 BX132S4**	135
229	218	1.6	6.4	3840	**C412_6.4 S4 ME4SB4**	**C412_6.4 S4 MX4SB4**	138	**C412_6.4 P132 BE132S4**	**C412_6.4 P132 BX132S4**	139
243	205	3.2	6.0	9480	**C612_6.0 S4 ME4SB4**	**C612_6.0 S4 MX4SB4**	146	**C612_6.0 P132 BE132S4**	**C612_6.0 P132 BX132S4**	147
245	204	1.3	6.0	3430	**C412_6.0 S4 ME4SB4**	**C412_6.0 S4 MX4SB4**	138	**C412_6.0 P132 BE132S4**	**C412_6.0 P132 BX132S4**	139
250	200	1.0	5.8	3020	**C362_5.8 S4 ME4SB4**	**C362_5.8 S4 MX4SB4**	134	**C362_5.8 P132 BE132S4**	**C362_5.8 P132 BX132S4**	135
259	193	2.3	5.6	6720	**C512_5.6 S4 ME4SB4**	**C512_5.6 S4 MX4SB4**	142	**C512_5.6 P132 BE132S4**	**C512_5.6 P132 BX132S4**	143
262	190	2.2	11.2	3770	**C412_11.2 S4 ME4SB2**		138	**C412_11.2 P132 BE132SA2**		139
277	181	1.1	5.3	2930	**C362_5.3 S4 ME4SB4**	**C362_5.3 S4 MX4SB4**	134	**C362_5.3 P132 BE132S4**	**C362_5.3 P132 BX132S4**	135
292	171	2.5	3.3	6530	**C512_3.3 S5 ME5SA6**		142	**C512_3.3 P160 BE160MA6**		143
295	169	0.9	5.0	2480	**C322_5.0 S4 ME4SB4**	**C322_5.0 S4 MX4SB4**	130	**C322_5.0 P132 BE132S4**	**C322_5.0 P132 BX132S4**	131
305	164	2.4	9.6	3680	**C412_9.6 S4 ME4SB2**		138	**C412_9.6 P132 BE132SA2**		139
313	159	1.6	4.7	3360	**C412_4.7 S4 ME4SB4**	**C412_4.7 S4 MX4SB4**	138	**C412_4.7 P132 BE132S4**	**C412_4.7 P132 BX132S4**	139
316	158	1.3	4.6	2860	**C362_4.6 S4 ME4SB4**	**C362_4.6 S4 MX4SB4**	134	**C362_4.6 P132 BE132S4**	**C362_4.6 P132 BX132S4**	135
324	154	1.0	4.5	2500	**C322_4.5 S4 ME4SB4**	**C322_4.5 S4 MX4SB4**	130	**C322_4.5 P132 BE132S4**	**C322_4.5 P132 BX132S4**	131
328	152	2.9	4.5	6330	**C512_4.5 S4 ME4SB4**	**C512_4.5 S4 MX4SB4**	142	**C512_4.5 P132 BE132S4**	**C512_4.5 P132 BX132S4**	143
338	147	2.6	8.6	3600	**C412_8.6 S4 ME4SB2**		138	**C412_8.6 P132 BE132SA2**		139
348	144	1.4	4.2	2830	**C362_4.2 S4 ME4SB4**	**C362_4.2 S4 MX4SB4**	134	**C362_4.2 P132 BE132S4**	**C362_4.2 P132 BX132S4**	135
364	137	2.7	8.0	2850	**C362_8.0 S4 ME4SB2**		134	**C362_8.0 P132 BE132SA2**		135
367	136	2.9	2.6	6150	**C512_2.6 S5 ME5SA6**		142	**C512_2.6 P160 BE160MA6**		143
391	128	1.2	3.7	2410	**C322_3.7 S4 ME4SB4**	**C322_3.7 S4 MX4SB4**	130	**C322_3.7 P132 BE132S4**	**C322_3.7 P132 BX132S4**	131
404	123	2.1	3.6	3240	**C412_3.6 S4 ME4SB4**	**C412_3.6 S4 MX4SB4**	138	**C412_3.6 P132 BE132S4**	**C412_3.6 P132 BX132S4**	139
414	121	2.9	7.1	3460	**C412_7.1 S4 ME4SB2**		138	**C412_7.1 P132 BE132SA2**		139
419	119	1.7	3.5	2750	**C362_3.5 S4 ME4SB4**	**C362_3.5 S4 MX4SB4**	134	**C362_3.5 P132 BE132S4**	**C362_3.5 P132 BX132S4**	135
428	117	1.2	3.4	2370	**C322_3.4 S4 ME4SB4**	**C322_3.4 S4 MX4SB4**	130	**C322_3.4 P132 BE132S4**	**C322_3.4 P132 BX132S4**	131
431	116	3.1	6.8	2750	**C362_6.8 S4 ME4SB2**		134	**C362_6.8 P132 BE132SA2**		135
459	109	1.8	3.2	2700	**C362_3.2 S4 ME4SB4**	**C362_3.2 S4 MX4SB4**	134	**C362_3.2 P132 BE132S4**	**C362_3.2 P132 BX132S4**	135
460	109	3.2	6.4	3370	**C412_6.4 S4 ME4SB2**		138	**C412_6.4 P132 BE132SA2**		139
491	102	2.6	6.0	3140	**C412_6.0 S4 ME4SB2**		138	**C412_6.0 P132 BE132SA2**		139

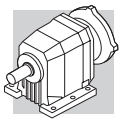

5.5 kW

n_2 min-1	M_2 Nm	S	i	R_{n2} N	IE2	IE3		IE2	IE3	
500	100	2.0	5.8	2620	**C362_5.8 S4 ME4SB2**		134	**C362_5.8 P132 BE132SA2**		135
507	98	1.3	2.9	2310	**C322_2.9 S4 ME4SB4**	**C322_2.9 S4 MX4SB4**	130	**C322_2.9 P132 BE132S4**	**C322_2.9 P132 BX132S4**	131
543	92	2.2	2.7	2620	**C362_2.7 S4 ME4SB4**	**C362_2.7 S4 MX4SB4**	134	**C362_2.7 P132 BE132S4**	**C362_2.7 P132 BX132S4**	135
549	91	2.7	2.7	3070	**C412_2.7 S4 ME4SB4**	**C412_2.7 S4 MX4SB4**	138	**C412_2.7 P132 BE132S4**	**C412_2.7 P132 BX132S4**	139
554	90	2.2	5.3	2550	**C362_5.3 S4 ME4SB2**		134	**C362_5.3 P132 BE132SA2**		135
591	84	1.8	5.0	2230	**C322_5.0 S4 ME4SB2**		130	**C322_5.0 P132 BE132SA2**		131
627	80	3.3	4.7	2990	**C412_4.7 S4 ME4SB2**		138	**C412_4.7 P132 BE132SA2**		139
650	77	2.0	4.5	2190	**C322_4.5 S4 ME4SB2**		130	**C322_4.5 P132 BE132SA2**		131
783	64	2.4	3.7	2120	**C322_3.7 S4 ME4SB2**		130	**C322_3.7 P132 BE132SA2**		131
858	58	2.4	3.4	2080	**C322_3.4 S4 ME4SB2**		130	**C322_3.4 P132 BE132SA2**		131
1016	49	2.6	2.9	2000	**C322_2.9 S4 ME4SB2**		130	**C322_2.9 P132 BE132SA2**		131

7.5 kW

n_2 min-1	M_2 Nm	S	i	R_{n2} N	IE2	IE3		IE2	IE3	
4.8	13252	0.9	300.5	85000	**C1004_300.5 S4 ME4LA4**	**C1004_300.5 S4 MX4LA4**	159	**C1004_300.5 P132 BE132MA4**	**C1004_300.5 P132 BX132MA4**	160
5.5	11598	1.0	263.0	85000	**C1004_263.0 S4 ME4LA4**	**C1004_263.0 S4 MX4LA4**	159	**C1004_263.0 P132 BE132MA4**	**C1004_263.0 P132 BX132MA4**	160
6.0	10770	1.1	244.2	85000	**C1004_244.2 S4 ME4LA4**	**C1004_244.2 S4 MX4LA4**	159	**C1004_244.2 P132 BE132MA4**	**C1004_244.2 P132 BX132MA4**	160
7.3	8804	1.4	199.6	85000	**C1004_199.6 S4 ME4LA4**	**C1004_199.6 S4 MX4LA4**	159	**C1004_199.6 P132 BE132MA4**	**C1004_199.6 P132 BX132MA4**	160
7.8	8175	1.5	185.4	85000	**C1004_185.4 S4 ME4LA4**	**C1004_185.4 S4 MX4LA4**	159	**C1004_185.4 P132 BE132MA4**	**C1004_185.4 P132 BX132MA4**	160
8.5	7843	0.9	172.1	60000	**C903_172.1 S4 ME4LA4**	**C903_172.1 S4 MX4LA4**	156	**C903_172.1 P132 BE132MA4**	**C903_172.1 P132 BX132MA4**	157
9.0	7149	1.7	162.1	85000	**C1004_162.1 S4 ME4LA4**	**C1004_162.1 S4 MX4LA4**	159	**C1004_162.1 P132 BE132MA4**	**C1004_162.1 P132 BX132MA4**	160
9.2	7189	1.0	157.8	60000	**C903_157.8 S4 ME4LA4**	**C903_157.8 S4 MX4LA4**	156	**C903_157.8 P132 BE132MA4**	**C903_157.8 P132 BX132MA4**	157
9.7	6855	1.8	150.4	85000	**C1003_150.4 S4 ME4LA4**	**C1003_150.4 S4 MX4LA4**	159	**C1003_150.4 P132 BE132MA4**	**C1003_150.4 P132 BX132MA4**	160
9.9	6668	1.1	146.3	59600	**C903_146.3 S4 ME4LA4**	**C903_146.3 S4 MX4LA4**	156	**C903_146.3 P132 BE132MA4**	**C903_146.3 P132 BX132MA4**	157
10.4	6365	1.7	139.7	85000	**C1003_139.7 S4 ME4LA4**	**C1003_139.7 S4 MX4LA4**	159	**C1003_139.7 P132 BE132MA4**	**C1003_139.7 P132 BX132MA4**	160
10.8	6113	1.2	134.1	59400	**C903_134.1 S4 ME4LA4**	**C903_134.1 S4 MX4LA4**	156	**C903_134.1 P132 BE132MA4**	**C903_134.1 P132 BX132MA4**	157
12.1	5492	2.2	120.5	85000	**C1003_120.5 S4 ME4LA4**	**C1003_120.5 S4 MX4LA4**	159	**C1003_120.5 P132 BE132MA4**	**C1003_120.5 P132 BX132MA4**	160
12.5	5319	1.4	116.7	58600	**C903_116.7 S4 ME4LA4**	**C903_116.7 S4 MX4LA4**	156	**C903_116.7 P132 BE132MA4**	**C903_116.7 P132 BX132MA4**	157
13.0	5100	2.4	111.9	85000	**C1003_111.9 S4 ME4LA4**	**C1003_111.9 S4 MX4LA4**	159	**C1003_111.9 P132 BE132MA4**	**C1003_111.9 P132 BX132MA4**	160
13.6	4876	1.5	107.0	58200	**C903_107.0 S4 ME4LA4**	**C903_107.0 S4 MX4LA4**	156	**C903_107.0 P132 BE132MA4**	**C903_107.0 P132 BX132MA4**	157
14.6	4548	2.6	99.8	85000	**C1003_99.8 S4 ME4LA4**	**C1003_99.8 S4 MX4LA4**	159	**C1003_99.8 P132 BE132MA4**	**C1003_99.8 P132 BX132MA4**	160
14.9	4438	0.9	97.4	34500	**C803_97.4 S4 ME4LA4**	**C803_97.4 S4 MX4LA4**	153	**C803_97.4 P132 BE132MA4**	**C803_97.4 P132 BX132MA4**	154
15.1	4386	1.6	96.2	57500	**C903_96.2 S4 ME4LA4**	**C903_96.2 S4 MX4LA4**	156	**C903_96.2 P132 BE132MA4**	**C903_96.2 P132 BX132MA4**	157
15.7	4223	2.8	92.7	85000	**C1003_92.7 S4 ME4LA4**	**C1003_92.7 S4 MX4LA4**	159	**C1003_92.7 P132 BE132MA4**	**C1003_92.7 P132 BX132MA4**	160
16.3	4068	1.0	89.3	35000	**C803_89.3 S4 ME4LA4**	**C803_89.3 S4 MX4LA4**	153	**C803_89.3 P132 BE132MA4**	**C803_89.3 P132 BX132MA4**	154
16.5	4020	1.8	88.2	56600	**C903_88.2 S4 ME4LA4**	**C903_88.2 S4 MX4LA4**	156	**C903_88.2 P132 BE132MA4**	**C903_88.2 P132 BX132MA4**	157
17.0	3899	3.1	85.6	85000	**C1003_85.6 S4 ME4LA4**	**C1003_85.6 S4 MX4LA4**	159	**C1003_85.6 P132 BE132MA4**	**C1003_85.6 P132 BX132MA4**	160
17.9	3701	1.9	81.2	56100	**C903_81.2 S4 ME4LA4**	**C903_81.2 S4 MX4LA4**	156	**C903_81.2 P132 BE132MA4**	**C903_81.2 P132 BX132MA4**	157
18.9	3505	1.1	76.9	35000	**C803_76.9 S4 ME4LA4**	**C803_76.9 S4 MX4LA4**	153	**C803_76.9 P132 BE132MA4**	**C803_76.9 P132 BX132MA4**	154
19.5	3392	2.1	74.4	55200	**C903_74.4 S4 ME4LA4**	**C903_74.4 S4 MX4LA4**	156	**C903_74.4 P132 BE132MA4**	**C903_74.4 P132 BX132MA4**	157
20.6	3213	1.2	70.5	35000	**C803_70.5 S4 ME4LA4**	**C803_70.5 S4 MX4LA4**	153	**C803_70.5 P132 BE132MA4**	**C803_70.5 P132 BX132MA4**	154
22.5	2943	2.4	64.6	54000	**C903_64.6 S4 ME4LA4**	**C903_64.6 S4 MX4LA4**	156	**C903_64.6 P132 BE132MA4**	**C903_64.6 P132 BX132MA4**	157
23.3	2848	1.4	62.5	35000	**C803_62.5 S4 ME4LA4**	**C803_62.5 S4 MX4LA4**	153	**C803_62.5 P132 BE132MA4**	**C803_62.5 P132 BX132MA4**	154
24.6	2698	2.6	59.2	53000	**C903_59.2 S4 ME4LA4**	**C903_59.2 S4 MX4LA4**	156	**C903_59.2 P132 BE132MA4**	**C903_59.2 P132 BX132MA4**	157
25.4	2611	1.5	57.3	35000	**C803_57.3 S4 ME4LA4**	**C803_57.3 S4 MX4LA4**	153	**C803_57.3 P132 BE132MA4**	**C803_57.3 P132 BX132MA4**	154
26.5	2501	2.9	54.9	52400	**C903_54.9 S4 ME4LA4**	**C903_54.9 S4 MX4LA4**	156	**C903_54.9 P132 BE132MA4**	**C903_54.9 P132 BX132MA4**	157
27.9	2377	1.0	52.2	22900	**C703_52.2 S4 ME4LA4**	**C703_52.2 S4 MX4LA4**	150	**C703_52.2 P132 BE132MA4**	**C703_52.2 P132 BX132MA4**	151
31	2162	1.8	47.4	35000	**C803_47.4 S4 ME4LA4**	**C803_47.4 S4 MX4LA4**	153	**C803_47.4 P132 BE132MA4**	**C803_47.4 P132 BX132MA4**	154
33	2037	1.1	44.7	22500	**C703_44.7 S4 ME4LA4**	**C703_44.7 S4 MX4LA4**	150	**C703_44.7 P132 BE132MA4**	**C703_44.7 P132 BX132MA4**	151
33	1982	1.9	43.5	35000	**C803_43.5 S4 ME4LA4**	**C803_43.5 S4 MX4LA4**	153	**C803_43.5 P132 BE132MA4**	**C803_43.5 P132 BX132MA4**	154
35	1880	1.2	41.3	22300	**C703_41.3 S4 ME4LA4**	**C703_41.3 S4 MX4LA4**	150	**C703_41.3 P132 BE132MA4**	**C703_41.3 P132 BX132MA4**	151
37	1821	1.8	39.1	33600	**C802_39.1 S4 ME4LA4**	**C802_39.1 S4 MX4LA4**	153	**C802_39.1 P132 BE132MA4**	**C802_39.1 P132 BX132MA4**	154

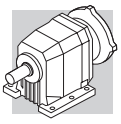

7.5 kW

n_2 min-1	M_2 Nm	S	i	R_{n2} N	IE2	IE3		IE2	IE3	
40	1594	1.0	36.1	13300	**C613_36.1 S4 ME4LA4**	**C613_36.1 S4 MX4LA4**	146	**C613_36.1 P132 BE132MA4**	**C613_36.1 P132 BX132MA4**	147
41	1634	3.3	35.1	47300	**C902_35.1 S4 ME4LA4**	**C902_35.1 S4 MX4LA4**	156	**C902_35.1 P132 BE132MA4**	**C902_35.1 P132 BX132MA4**	157
42	1617	1.3	34.7	20500	**C702_34.7 S4 ME4LA4**	**C702_34.7 S4 MX4LA4**	150	**C702_34.7 P132 BE132MA4**	**C702_34.7 P132 BX132MA4**	151
44	1454	1.0	33.0	13100	**C613_33.0 S4 ME4LA4**	**C613_33.0 S4 MX4LA4**	146	**C613_33.0 P132 BE132MA4**	**C613_33.0 P132 BX132MA4**	147
46	1459	2.5	31.3	32200	**C802_31.3 S4 ME4LA4**	**C802_31.3 S4 MX4LA4**	153	**C802_31.3 P132 BE132MA4**	**C802_31.3 P132 BX132MA4**	154
48	1417	1.0	30.4	13000	**C612_30.4 S4 ME4LA4**	**C612_30.4 S4 MX4LA4**	146	**C612_30.4 P132 BE132MA4**	**C612_30.4 P132 BX132MA4**	147
50	1295	1.1	29.4	13100	**C613_29.4 S4 ME4LA4**	**C613_29.4 S4 MX4LA4**	146	**C613_29.4 P132 BE132MA4**	**C613_29.4 P132 BX132MA4**	147
52	1290	1.6	27.7	20000	**C702_27.7 S4 ME4LA4**	**C702_27.7 S4 MX4LA4**	150	**C702_27.7 P132 BE132MA4**	**C702_27.7 P132 BX132MA4**	151
53	1276	1.1	27.4	12800	**C612_27.4 S4 ME4LA4**	**C612_27.4 S4 MX4LA4**	146	**C612_27.4 P132 BE132MA4**	**C612_27.4 P132 BX132MA4**	147
56	1208	3.1	25.9	31000	**C802_25.9 S4 ME4LA4**	**C802_25.9 S4 MX4LA4**	153	**C802_25.9 P132 BE132MA4**	**C802_25.9 P132 BX132MA4**	154
59	1155	1.2	24.8	12700	**C612_24.8 S4 ME4LA4**	**C612_24.8 S4 MX4LA4**	146	**C612_24.8 P132 BE132MA4**	**C612_24.8 P132 BX132MA4**	147
61	1115	3.2	24.0	30500	**C802_24.0 S4 ME4LA4**	**C802_24.0 S4 MX4LA4**	153	**C802_24.0 P132 BE132MA4**	**C802_24.0 P132 BX132MA4**	154
64	1064	2.0	22.9	19400	**C702_22.9 S4 ME4LA4**	**C702_22.9 S4 MX4LA4**	150	**C702_22.9 P132 BE132MA4**	**C702_22.9 P132 BX132MA4**	151
65	1040	1.3	22.4	12500	**C612_22.4 S4 ME4LA4**	**C612_22.4 S4 MX4LA4**	146	**C612_22.4 P132 BE132MA4**	**C612_22.4 P132 BX132MA4**	147
65	1035	3.6	22.2	30000	**C802_22.2 S4 ME4LA4**	**C802_22.2 S4 MX4LA4**	153	**C802_22.2 P132 BE132MA4**	**C802_22.2 P132 BX132MA4**	154
67	994	0.9	21.8	7200	**C513_21.8 S4 ME4LA4**	**C513_21.8 S4 MX4LA4**	142	**C513_21.8 P132 BE132MA4**	**C513_21.8 P132 BX132MA4**	143
74	912	1.5	19.6	12300	**C612_19.6 S4 ME4LA4**	**C612_19.6 S4 MX4LA4**	146	**C612_19.6 P132 BE132MA4**	**C612_19.6 P132 BX132MA4**	147
75	898	2.3	19.3	18900	**C702_19.3 S4 ME4LA4**	**C702_19.3 S4 MX4LA4**	150	**C702_19.3 P132 BE132MA4**	**C702_19.3 P132 BX132MA4**	151
77	879	0.9	18.9	7100	**C512_18.9 S4 ME4LA4**	**C512_18.9 S4 MX4LA4**	142	**C512_18.9 P132 BE132MA4**	**C512_18.9 P132 BX132MA4**	143
82	822	1.6	17.7	12000	**C612_17.7 S4 ME4LA4**	**C612_17.7 S4 MX4LA4**	146	**C612_17.7 P132 BE132MA4**	**C612_17.7 P132 BX132MA4**	147
87	778	2.6	16.7	18200	**C702_16.7 S4 ME4LA4**	**C702_16.7 S4 MX4LA4**	150	**C702_16.7 P132 BE132MA4**	**C702_16.7 P132 BX132MA4**	151
88	773	1.0	16.6	8070	**C512_16.6 S4 ME4LA4**	**C512_16.6 S4 MX4LA4**	142	**C512_16.6 P132 BE132MA4**	**C512_16.6 P132 BX132MA4**	143
91	742	1.8	15.9	11800	**C612_15.9 S4 ME4LA4**	**C612_15.9 S4 MX4LA4**	146	**C612_15.9 P132 BE132MA4**	**C612_15.9 P132 BX132MA4**	147
95	714	2.9	15.3	18000	**C702_15.3 S4 ME4LA4**	**C702_15.3 S4 MX4LA4**	150	**C702_15.3 P132 BE132MA4**	**C702_15.3 P132 BX132MA4**	151
97	697	1.1	15.0	8000	**C512_15.0 S4 ME4LA4**	**C512_15.0 S4 MX4LA4**	142	**C512_15.0 P132 BE132MA4**	**C512_15.0 P132 BX132MA4**	143
101	668	2.0	14.3	11500	**C612_14.3 S4 ME4LA4**	**C612_14.3 S4 MX4LA4**	146	**C612_14.3 P132 BE132MA4**	**C612_14.3 P132 BX132MA4**	147
111	611	1.2	13.1	7840	**C512_13.1 S4 ME4LA4**	**C512_13.1 S4 MX4LA4**	142	**C512_13.1 P132 BE132MA4**	**C512_13.1 P132 BX132MA4**	143
120	563	2.4	12.1	11100	**C612_12.1 S4 ME4LA4**	**C612_12.1 S4 MX4LA4**	146	**C612_12.1 P132 BE132MA4**	**C612_12.1 P132 BX132MA4**	147
123	551	1.4	11.8	7730	**C512_11.8 S4 ME4LA4**	**C512_11.8 S4 MX4LA4**	142	**C512_11.8 P132 BE132MA4**	**C512_11.8 P132 BX132MA4**	143
134	507	2.7	10.9	10900	**C612_10.9 S4 ME4LA4**	**C612_10.9 S4 MX4LA4**	146	**C612_10.9 P132 BE132MA4**	**C612_10.9 P132 BX132MA4**	147
148	457	3.0	9.8	10600	**C612_9.8 S4 ME4LA4**	**C612_9.8 S4 MX4LA4**	146	**C612_9.8 P132 BE132MA4**	**C612_9.8 P132 BX132MA4**	147
149	454	1.5	9.8	7450	**C512_9.8 S4 ME4LA4**	**C512_9.8 S4 MX4LA4**	142	**C512_9.8 P132 BE132MA4**	**C512_9.8 P132 BX132MA4**	143
152	447	0.9	9.6	3300	**C412_9.6 S4 ME4LA4**	**C412_9.6 S4 MX4LA4**	138	**C412_9.6 P132 BE132MA4**	**C412_9.6 P132 BX132MA4**	139
165	412	3.3	8.8	10300	**C612_8.8 S4 ME4LA4**	**C612_8.8 S4 MX4LA4**	146	**C612_8.8 P132 BE132MA4**	**C612_8.8 P132 BX132MA4**	147
165	410	0.9	8.8	2880	**C362_8.8 S4 ME4LA4**	**C362_8.8 S4 MX4LA4**	134	**C362_8.8 P132 BE132MA4**	**C362_8.8 P132 BX132MA4**	135
166	409	1.7	8.8	7320	**C512_8.8 S4 ME4LA4**	**C512_8.8 S4 MX4LA4**	142	**C512_8.8 P132 BE132MA4**	**C512_8.8 P132 BX132MA4**	143
168	402	1.0	8.6	3430	**C412_8.6 S4 ME4LA4**	**C412_8.6 S4 MX4LA4**	138	**C412_8.6 P132 BE132MA4**	**C412_8.6 P132 BX132MA4**	139
181	374	1.0	8.0	2900	**C362_8.0 S4 ME4LA4**	**C362_8.0 S4 MX4LA4**	134	**C362_8.0 P132 BE132MA4**	**C362_8.0 P132 BX132MA4**	135
188	361	1.8	7.8	7120	**C512_7.8 S4 ME4LA4**	**C512_7.8 S4 MX4LA4**	142	**C512_7.8 P132 BE132MA4**	**C512_7.8 P132 BX132MA4**	143
206	329	1.1	7.1	3470	**C412_7.1 S4 ME4LA4**	**C412_7.1 S4 MX4LA4**	138	**C412_7.1 P132 BE132MA4**	**C412_7.1 P132 BX132MA4**	139
208	325	1.9	7.0	6970	**C512_7.0 S4 ME4LA4**	**C512_7.0 S4 MX4LA4**	142	**C512_7.0 P132 BE132MA4**	**C512_7.0 P132 BX132MA4**	143
215	316	1.1	6.8	2900	**C362_6.8 S4 ME4LA4**	**C362_6.8 S4 MX4LA4**	134	**C362_6.8 P132 BE132MA4**	**C362_6.8 P132 BX132MA4**	135
229	296	1.2	6.4	3440	**C412_6.4 S4 ME4LA4**	**C412_6.4 S4 MX4LA4**	138	**C412_6.4 P132 BE132MA4**	**C412_6.4 P132 BX132MA4**	139
242	279	2.4	6.0	9180	**C612_6.0 S4 ME4LA4**	**C612_6.0 S4 MX4LA4**	146	**C612_6.0 P132 BE132MA4**	**C612_6.0 P132 BX132MA4**	147
244	277	0.9	6.0	2920	**C412_6.0 S4 ME4LA4**	**C412_6.0 S4 MX4LA4**	138	**C412_6.0 P132 BE132MA4**	**C412_6.0 P132 BX132MA4**	139
258	262	1.7	5.6	6410	**C512_5.6 S4 ME4LA4**	**C512_5.6 S4 MX4LA4**	142	**C512_5.6 P132 BE132MA4**	**C512_5.6 P132 BX132MA4**	143
312	217	1.2	4.7	2960	**C412_4.7 S4 ME4LA4**	**C412_4.7 S4 MX4LA4**	138	**C412_4.7 P132 BE132MA4**	**C412_4.7 P132 BX132MA4**	139
315	215	0.9	4.6	2600	**C362_4.6 S4 ME4LA4**	**C362_4.6 S4 MX4LA4**	134	**C362_4.6 P132 BE132MA4**	**C362_4.6 P132 BX132MA4**	135
319	212	3.1	4.6	8550	**C612_4.6 S4 ME4LA4**	**C612_4.6 S4 MX4LA4**	146	**C612_4.6 P132 BE132MA4**	**C612_4.6 P132 BX132MA4**	147
327	207	2.1	4.5	6090	**C512_4.5 S4 ME4LA4**	**C512_4.5 S4 MX4LA4**	142	**C512_4.5 P132 BE132MA4**	**C512_4.5 P132 BX132MA4**	143
342	199	3.3	2.8	8390	**C612_2.8 S5 ME5SB6**		146	**C612_2.8 P160 BE160MB6**		147
346	196	1.0	4.2	2550	**C362_4.2 S4 ME4LA4**	**C362_4.2 S4 MX4LA4**	134	**C362_4.2 P132 BE132MA4**	**C362_4.2 P132 BX132MA4**	135
367	185	2.2	2.6	5920	**C512_2.6 S5 ME5SB6**		142	**C512_2.6 P160 BE160MB6**		143
403	168	1.5	3.6	2930	**C412_3.6 S4 ME4LA4**	**C412_3.6 S4 MX4LA4**	138	**C412_3.6 P132 BE132MA4**	**C412_3.6 P132 BX132MA4**	139
414	164	2.2	7.1	3240	**C412_7.1 S4 ME4LA2**		138	**C412_7.1 P132 BE132SB2**		139
417	162	1.2	3.5	2500	**C362_3.5 S4 ME4LA4**	**C362_3.5 S4 MX4LA4**	134	**C362_3.5 P132 BE132MA4**	**C362_3.5 P132 BX132MA4**	135
440	154	2.7	3.3	5660	**C512_3.3 S4 ME4LA4**	**C512_3.3 S4 MX4LA4**	142	**C512_3.3 P132 BE132MA4**	**C512_3.3 P132 BX132MA4**	143

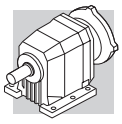

7.5 kW

n_2 min-1	M_2 Nm	S	i	R_{n2} N	IE2	IE3		IE2	IE3	
457	148	1.4	3.2	2500	**C362_3.2 S4 ME4LA4**	**C362_3.2 S4 MX4LA4**	134	**C362_3.2 P132 BE132MA4**	**C362_3.2 P132 BX132MA4**	135
460	148	2.3	6.4	3170	**C412_6.4 S4 ME4LA2**		138	**C412_6.4 P132 BE132SB2**		139
491	138	1.9	6.0	2880	**C412_6.0 S4 ME4LA2**		138	**C412_6.0 P132 BE132SB2**		139
505	134	1.0	2.9	2100	**C322_2.9 S4 ME4LA4**	**C322_2.9 S4 MX4LA4**	130	**C322_2.9 P132 BN132MA4**	**C322_2.9 P132 BX132MA4**	131
519	131	3.3	5.6	5420	**C512_5.6 S4 ME4LA2**		142	**C512_5.6 P132 BE132SB2**		143
542	125	1.6	2.7	2440	**C362_2.7 S4 ME4LA4**	**C362_2.7 S4 MX4LA4**	134	**C362_2.7 P132 BE132MA4**	**C362_2.7 P132 BX132MA4**	135
547	124	2.0	2.7	2840	**C412_2.7 S4 ME4LA4**	**C412_2.7 S4 MX4LA4**	138	**C412_2.7 P132 BE132MA4**	**C412_2.7 P132 BX132MA4**	139
553	122	3.3	2.6	5330	**C512_2.6 S4 ME4LA4**	**C512_2.6 S4 MX4LA4**	142	**C512_2.6 P132 BE132MA4**	**C512_2.6 P132 BX132MA4**	143
554	123	1.6	5.3	2370	**C362_5.3 S4 ME4LA2**		134	**C362_5.3 P132 BE132SB2**		135
627	108	2.4	4.7	2790	**C412_4.7 S4 ME4LA2**		138	**C412_4.7 P132 BE132SB2**		139
633	108	1.9	4.6	2330	**C362_4.6 S4 ME4LA2**		134	**C362_4.6 P132 BE132SB2**		135
696	98	2.0	4.2	2290	**C362_4.2 S4 ME4LA2**		134	**C362_4.2 P132 BE132SB2**		135
810	84	3.0	3.6	2670	**C412_3.6 S4 ME4LA2**		138	**C412_3.6 P132 BE132SB2**		139
839	81	2.5	3.5	2210	**C362_3.5 S4 ME4LA2**		134	**C362_3.5 P132 BE132SB2**		135
919	74	2.7	3.2	2170	**C362_3.2 S4 ME4LA2**		134	**C362_3.2 P132 BE132SB2**		135
1089	62	3.2	2.7	2100	**C362_2.7 S4 ME4LA2**		134	**C362_2.7 P132 BE132SB2**		135

9.2 kW

n_2 min-1	M_2 Nm	S	i	R_{n2} N	IE2	IE3		IE2	IE3	
5.9	13408	0.9	244.2	85000	**C1004_244.2 S4 ME4LB4**		159	**C1004_244.2 P132 BE132MB4**	**C1004_244.2 P160 BX160MA4**	160
7.3	10960	1.1	199.6	85000	**C1004_199.6 S4 ME4LB4**		159	**C1004_199.6 P132 BE132MB4**	**C1004_199.6 P160 BX160MA4**	160
7.8	10177	1.2	185.4	85000	**C1004_185.4 S4 ME4LB4**		159	**C1004_185.4 P132 BE132MB4**	**C1004_185.4 P160 BX160MA4**	160
8.9	8900	1.3	162.1	85000	**C1004_162.1 S4 ME4LB4**		159	**C1004_162.1 P132 BE132MB4**	**C1004_162.1 P160 BX160MA4**	160
9.6	8534	1.4	150.4	85000	**C1003_150.4 S4 ME4LB4**	**C1003_150.4 S5 MX5SA4**	159	**C1003_150.4 P132 BE132MB4**	**C1003_150.4 P160 BX160MA4**	160
10.4	7924	1.4	139.7	85000	**C1003_139.7 S4 ME4LB4**	**C1003_139.7 S5 MX5SA4**	159	**C1003_139.7 P132 BE132MB4**	**C1003_139.7 P160 BX160MA4**	160
10.8	7610	0.9	134.1	54900	**C903_134.1 S4 ME4LB4**	**C903_134.1 S5 MX5SA4**	156	**C903_134.1 P132 BE132MB4**	**C903_134.1 P160 BX160MA4**	157
12.0	6837	1.8	120.5	85000	**C1003_120.5 S4 ME4LB4**	**C1003_120.5 S5 MX5SA4**	159	**C1003_120.5 P132 BE132MB4**	**C1003_120.5 P160 BX160MA4**	160
12.4	6622	1.1	116.7	54800	**C903_116.7 S4 ME4LB4**	**C903_116.7 S5 MX5SA4**	156	**C903_116.7 P132 BE132MB4**	**C903_116.7 P160 BX160MA4**	157
13.0	6348	1.9	111.9	85000	**C1003_111.9 S4 ME4LB4**	**C1003_111.9 S5 MX5SA4**	159	**C1003_111.9 P132 BE132MB4**	**C1003_111.9 P160 BX160MA4**	160
13.6	6070	1.2	107.0	54600	**C903_107.0 S4 ME4LB4**	**C903_107.0 S5 MX5SA4**	156	**C903_107.0 P132 BE132MB4**	**C903_107.0 P160 BX160MA4**	157
14.5	5662	2.1	99.8	85000	**C1003_99.8 S4 ME4LB4**	**C1003_99.8 S5 MX5SA4**	159	**C1003_99.8 P132 BE132MB4**	**C1003_99.8 P160 BX160MA4**	160
15.1	5460	1.3	96.2	54200	**C903_96.2 S4 ME4LB4**	**C903_96.2 S5 MX5SA4**	156	**C903_96.2 P132 BE132MB4**	**C903_96.2 P160 BX160MA4**	157
15.6	5257	2.3	92.7	85000	**C1003_92.7 S4 ME4LB4**	**C1003_92.7 S5 MX5SA4**	159	**C1003_92.7 P132 BE132MB4**	**C1003_92.7 P160 BX160MA4**	160
16.4	5005	1.4	88.2	53700	**C903_88.2 S4 ME4LB4**	**C903_88.2 S5 MX5SA4**	156	**C903_88.2 P132 BE132MB4**	**C903_88.2 P160 BX160MA4**	157
16.9	4854	2.5	85.6	85000	**C1003_85.6 S4 ME4LB4**	**C1003_85.6 S5 MX5SA4**	159	**C1003_85.6 P132 BE132MB4**	**C1003_85.6 P160 BX160MA4**	160
17.9	4607	1.6	81.2	53300	**C903_81.2 S4 ME4LB4**	**C903_81.2 S5 MX5SA4**	156	**C903_81.2 P132 BE132MB4**	**C903_81.2 P160 BX160MA4**	157
18.3	4507	2.7	79.4	85000	**C1003_79.4 S4 ME4LB4**	**C1003_79.4 S5 MX5SA4**	159	**C1003_79.4 P132 BE132MB4**	**C1003_79.4 P160 BX160MA4**	160
18.9	4363	0.9	76.9	33700	**C803_76.9 S4 ME4LB4**	**C803_76.9 S5 MX5SA4**	153	**C803_76.9 P132 BE132MB4**	**C803_76.9 P160 BX160MA4**	154
19.5	4223	1.7	74.4	52700	**C903_74.4 S4 ME4LB4**	**C903_74.4 S5 MX5SA4**	156	**C903_74.4 P132 BE132MB4**	**C903_74.4 P160 BX160MA4**	157
20.6	4000	1.0	70.5	35000	**C803_70.5 S4 ME4LB4**	**C803_70.5 S5 MX5SA4**	153	**C803_70.5 P132 BE132MB4**	**C803_70.5 P160 BX160MA4**	154
22.5	3664	2.0	64.6	51800	**C903_64.6 S4 ME4LB4**	**C903_64.6 S5 MX5SA4**	156	**C903_64.6 P132 BE132MB4**	**C903_64.6 P160 BX160MA4**	157
23.2	3546	1.1	62.5	35000	**C803_62.5 S4 ME4LB4**	**C803_62.5 S5 MX5SA4**	153	**C803_62.5 P132 BE132MB4**	**C803_62.5 P160 BX160MA4**	154
24.5	3358	2.1	59.2	51100	**C903_59.2 S4 ME4LB4**	**C903_59.2 S5 MX5SA4**	156	**C903_59.2 P132 BE132MB4**	**C903_59.2 P160 BX160MA4**	157
25.3	3250	1.2	57.3	35000	**C803_57.3 S4 ME4LB4**	**C803_57.3 S5 MX5SA4**	153	**C803_57.3 P132 BE132MB4**	**C803_57.3 P160 BX160MA4**	154
26.4	3113	2.3	54.9	50500	**C903_54.9 S4 ME4LB4**	**C903_54.9 S5 MX5SA4**	156	**C903_54.9 P132 BE132MB4**	**C903_54.9 P160 BX160MA4**	157
28.8	2854	2.5	50.3	49700	**C903_50.3 S4 ME4LB4**	**C903_50.3 S5 MX5SA4**	156	**C903_50.3 P132 BE132MB4**	**C903_50.3 P160 BX160MA4**	157
31	2692	1.4	47.4	34900	**C803_47.4 S4 ME4LB4**	**C803_47.4 S5 MX5SA4**	153	**C803_47.4 P132 BE132MB4**	**C803_47.4 P160 BX160MA4**	154
32	2536	0.9	44.7	21100	**C703_44.7 S4 ME4LB4**	**C703_44.7 S5 MX5SA4**	150	**C703_44.7 P132 BE132MB4**	**C703_44.7 P160 BX160MA4**	151
33	2467	1.5	43.5	34400	**C803_43.5 S4 ME4LB4**	**C803_43.5 S5 MX5SA4**	153	**C803_43.5 P132 BE132MB4**	**C803_43.5 P160 BX160MA4**	154
34	2439	3.0	43.0	48300	**C903_43.0 S4 ME4LB4**	**C903_43.0 S5 MX5SA4**	156	**C903_43.0 P132 BE132MB4**	**C903_43.0 P160 BX160MA4**	157
35	2341	1.0	41.3	21000	**C703_41.3 S4 ME4LB4**	**C703_41.3 S5 MX5SA4**	150	**C703_41.3 P132 BE132MB4**	**C703_41.3 P160 BX160MA4**	151
37	2266	1.4	39.1	32300	**C802_39.1 S4 ME4LB4**	**C802_39.1 S5 MX5SA4**	153	**C802_39.1 P132 BE132MB4**	**C802_39.1 P160 BX160MA4**	154

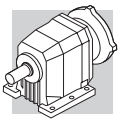

9.2 kW

n_2 min-1	M_2 Nm	S	i	R_{n2} N	IE2	IE3		IE2	IEC IE3	
41	2034	2.7	35.1	46200	**C902_35.1 S4 ME4LB4**	**C902_35.1 S5 MX5SA4**	156	**C902_35.1 P132 BE132MB4**	**C902_35.1 P160 BX160MA4**	157
42	2014	1.0	34.7	19200	**C702_34.7 S4 ME4LB4**	**C702_34.7 S5 MX5SA4**	150	**C702_34.7 P132 BE132MB4**	**C702_34.7 P160 BX160MA4**	151
46	1816	2.0	31.3	31100	**C802_31.3 S4 ME4LB4**	**C802_31.3 S5 MX5SA4**	153	**C802_31.3 P132 BE132MB4**	**C802_31.3 P160 BX160MA4**	154
49	1706	3.5	29.4	44600	**C902_29.4 S4 ME4LB4**	**C902_29.4 S5 MX5SA4**	156	**C902_29.4 P132 BE132MB4**	**C902_29.4 P160 BX160MA4**	157
49	1612	0.9	29.4	10500	**C613_29.4 S4 ME4LB4**	**C613_29.4 S5 MX5SA4**	146	**C613_29.4 P132 BE132MB4**	**C613_29.4 P160 BX160MA4**	147
52	1606	1.3	27.7	18900	**C702_27.7 S4 ME4LB4**	**C702_27.7 S5 MX5SA4**	150	**C702_27.7 P132 BE132MB4**	**C702_27.7 P160 BX160MA4**	151
54	1470	1.0	26.8	11400	**C613_26.8 S4 ME4LB4**	**C613_26.8 S5 MX5SA4**	146	**C613_26.8 P132 BE132MB4**	**C613_26.8 P160 BX160MA4**	147
56	1504	2.5	25.9	30300	**C802_25.9 S4 ME4LB4**	**C802_25.9 S5 MX5SA4**	153	**C802_25.9 P132 BE132MB4**	**C802_25.9 P160 BX160MA4**	154
58	1438	0.9	24.8	11800	**C612_24.8 S4 ME4LB4**	**C612_24.8 S5 MX5SA4**	146	**C612_24.8 P132 BE132MB4**	**C612_24.8 P160 BX160MA4**	147
61	1388	2.6	24.0	30000	**C802_24.0 S4 ME4LB4**	**C802_24.0 S5 MX5SA4**	153	**C802_24.0 P132 BE132MB4**	**C802_24.0 P160 BX160MA4**	154
63	1324	1.6	22.9	18500	**C702_22.9 S4 ME4LB4**	**C702_22.9 S5 MX5SA4**	150	**C702_22.9 P132 BE132MB4**	**C702_22.9 P160 BX160MA4**	151
65	1295	1.0	22.4	11700	**C612_22.4 S4 ME4LB4**	**C612_22.4 S5 MX5SA4**	146	**C612_22.4 P132 BE132MB4**	**C612_22.4 P160 BX160MA4**	147
65	1289	2.9	22.2	29200	**C802_22.2 S4 ME4LB4**	**C802_22.2 S5 MX5SA4**	153	**C802_22.2 P132 BE132MB4**	**C802_22.2 P160 BX160MA4**	154
71	1190	3.0	20.5	28900	**C802_20.5 S4 ME4LB4**	**C802_20.5 S5 MX5SA4**	153	**C802_20.5 P132 BE132MB4**	**C802_20.5 P160 BX160MA4**	154
74	1136	1.2	19.6	11600	**C612_19.6 S4 ME4LB4**	**C612_19.6 S5 MX5SA4**	146	**C612_19.6 P132 BE132MB4**	**C612_19.6 P160 BX160MA4**	147
75	1118	1.9	19.3	18100	**C702_19.3 S4 ME4LB4**	**C702_19.3 S5 MX5SA4**	150	**C702_19.3 P132 BE132MB4**	**C702_19.3 P160 BX160MA4**	151
82	1023	1.3	17.7	11400	**C612_17.7 S4 ME4LB4**	**C612_17.7 S5 MX5SA4**	146	**C612_17.7 P132 BE132MB4**	**C612_17.7 P160 BX160MA4**	147
87	968	2.1	16.7	17500	**C702_16.7 S4 ME4LB4**	**C702_16.7 S5 MX5SA4**	150	**C702_16.7 P132 BE132MB4**	**C702_16.7 P160 BX160MA4**	151
91	923	1.5	15.9	11200	**C612_15.9 S4 ME4LB4**	**C612_15.9 S5 MX5SA4**	146	**C612_15.9 P132 BE132MB4**	**C612_15.9 P160 BX160MA4**	147
95	889	2.4	15.3	17500	**C702_15.3 S4 ME4LB4**	**C702_15.3 S5 MX5SA4**	150	**C702_15.3 P132 BE132MB4**	**C702_15.3 P160 BX160MA4**	151
97	867	0.9	15.0	7430	**C512_15.0 S4 ME4LB4**	**C512_15.0 S5 MX5SA4**	142	**C512_15.0 P132 BE132MB4**	**C512_15.0 P160 BX160MA4**	143
101	831	1.6	14.3	11000	**C612_14.3 S4 ME4LB4**	**C612_14.3 S5 MX5SA4**	146	**C612_14.3 P132 BE132MB4**	**C612_14.3 P160 BX160MA4**	147
103	817	2.6	14.1	17000	**C702_14.1 S4 ME4LB4**	**C702_14.1 S5 MX5SA4**	150	**C702_14.1 P132 BE132MB4**	**C702_14.1 P160 BX160MA4**	151
110	761	1.0	13.1	7340	**C512_13.1 S4 ME4LB4**	**C512_13.1 S5 MX5SA4**	142	**C512_13.1 P132 BE132MB4**	**C512_13.1 P160 BX160MA4**	143
111	755	2.8	13.0	17000	**C702_13.0 S4 ME4LB4**	**C702_13.0 S5 MX5SA4**	150	**C702_13.0 P132 BE132MB4**	**C702_13.0 P160 BX160MA4**	151
120	701	1.9	12.1	10700	**C612_12.1 S4 ME4LB4**	**C612_12.1 S5 MX5SA4**	146	**C612_12.1 P132 BE132MB4**	**C612_12.1 P160 BX160MA4**	147
123	686	1.1	11.8	7280	**C512_11.8 S4 ME4LB4**	**C512_11.8 S5 MX5SA4**	142	**C512_11.8 P132 BE132MB4**	**C512_11.8 P160 BX160MA4**	143
128	653	3.2	22.9	16500	**C702_22.9 S4 ME4LB2**	**C702_22.9 S5 ME4LB2**	150	**C702_22.9 P132 BE132MB2**	**C702_22.9 P160 BE132MB2**	151
133	631	2.1	10.9	10500	**C612_10.9 S4 ME4LB4**	**C612_10.9 S5 MX5SA4**	146	**C612_10.9 P132 BE132MB4**	**C612_10.9 P160 BX160MA4**	147
148	569	2.4	9.8	10300	**C612_9.8 S4 ME4LB4**	**C612_9.8 S5 MX5SA4**	146	**C612_9.8 P132 BE132MB4**	**C612_9.8 P160 BX160MA4**	147
149	565	1.2	9.8	7080	**C512_9.8 S4 ME4LB4**	**C512_9.8 S5 MX5SA4**	142	**C512_9.8 P132 BE132MB4**	**C512_9.8 P160 BX160MA4**	143
164	512	2.6	8.8	10000	**C612_8.8 S4 ME4LB4**	**C612_8.8 S5 MX5SA4**	146	**C612_8.8 P132 BE132MB4**	**C612_8.8 P160 BX160MA4**	147
165	509	1.3	8.8	6990	**C512_8.8 S4 ME4LB4**	**C512_8.8 S5 MX5SA4**	142	**C512_8.8 P132 BE132MB4**	**C512_8.8 P160 BX160MA4**	143
187	449	1.4	7.8	6820	**C512_7.8 S4 ME4LB4**	**C512_7.8 S5 MX5SA4**	142	**C512_7.8 P132 BE132MB4**	**C512_7.8 P160 BX160MA4**	143
194	434	3.1	7.5	9670	**C612_7.5 S4 ME4LB4**	**C612_7.5 S5 MX5SA4**	146	**C612_7.5 P132 BE132MB4**	**C612_7.5 P160 BX160MA4**	147
208	405	1.6	7.0	6710	**C512_7.0 S4 ME4LB4**	**C512_7.0 S5 MX5SA4**	142	**C512_7.0 P132 BE132MB4**	**C512_7.0 P160 BX160MA4**	143
215	391	3.5	6.7	9410	**C612_6.7 S4 ME4LB4**	**C612_6.7 S5 MX5SA4**	146	**C612_6.7 P132 BE132MB4**	**C612_6.7 P160 BX160MA4**	147
228	369	0.9	6.4	3100	**C412_6.4 S4 ME4LB4**		138	**C412_6.4 P132 BE132MB4**		139
242	348	1.9	6.0	8930	**C612_6.0 S4 ME4LB4**	**C612_6.0 S5 MX5SA4**	146	**C612_6.0 P132 BE132MB4**	**C612_6.0 P160 BX160MA4**	147
258	326	1.3	5.6	6150	**C512_5.6 S4 ME4LB4**	**C512_5.6 S5 MX5SA4**	142	**C512_5.6 P132 BE132MB4**	**C512_5.6 P160 BX160MA4**	143
262	319	1.3	11.2	3110	**C412_11.2 S4 ME4LB2**		138	**C412_11.2 P132 BE132MB2**		139
311	270	1.0	4.7	2620	**C412_4.7 S4 ME4LB4**		138	**C412_4.7 P132 BE132MB4**		139
318	264	2.5	4.6	8360	**C612_4.6 S4 ME4LB4**	**C612_4.6 S5 MX5SA4**	146	**C612_4.6 P132 BE132MB4**	**C612_4.6 P160 BX160MA4**	147
326	258	1.7	4.5	5880	**C512_4.5 S4 ME4LB4**	**C512_4.5 S5 MX5SA4**	142	**C512_4.5 P132 BE132MB4**	**C512_5.6 P160 BX160MA4**	143
338	247	1.6	8.6	3090	**C412_8.6 S4 ME4LB2**		138	**C412_8.6 P132 BE132MB2**		139
377	222	2.9	7.8	5870	**C512_7.8 S4 ME4LB2**		142	**C512_7.8 P132 BE132MB2**		143
402	209	1.2	3.6	2670	**C412_3.6 S4 ME4LB4**		138	**C412_3.6 P132 BE132MB4**		139
413	202	1.8	7.1	3050	**C412_7.1 S4 ME4LB2**		138	**C412_7.1 P132 BE132MB2**		139
416	202	1.0	3.5	2300	**C362_3.5 S4 ME4LB4**		134	**C362_3.5 P132 BE132MB4**		135
418	200	3.2	7.0	5730	**C512_7.0 S4 ME4LB2**		142	**C512_7.0 P132 BE132MB2**		143
438	192	2.2	3.3	5510	**C512_3.3 S4 ME4LB4**	**C512_3.3 S5 MX5SA4**	142	**C512_3.3 P132 BE132MB4**	**C512_3.3 P160 BX160MA4**	143
456	184	1.1	3.2	2300	**C362_3.2 S4 ME4LB4**		134	**C362_3.2 P132 BE132MB4**		135
459	182	1.9	6.4	3000	**C412_6.4 S4 ME4LB2**		138	**C412_6.4 P132 BE132MB2**		139
491	170	1.5	6.0	2660	**C412_6.0 S4 ME4LB2**		138	**C412_6.0 P132 BE132MB2**		139
519	161	2.7	5.6	5290	**C512_5.6 S4 ME4LB2**		142	**C512_5.6 P132 BE132MB2**		143
540	156	1.3	2.7	2280	**C362_2.7 S4 ME4LB4**		134	**C362_2.7 P132 BE132MB4**		135
545	154	1.6	2.7	2650	**C412_2.7 S4 ME4LB4**		138	**C412_2.7 P132 BE132MB4**		139

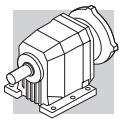

9.2 kW

n_2 min-1	M_2 Nm	S	i	R_{n2} N	IE2	IE3		IE2	IE3	
552	152	2.6	2.6	5210	**C512_2.6 S4 ME4LB4**	**C512_2.6 S5 MX5SA4**	142	**C512_2.6 P132 BE132MB4**	**C512_2.6 P160 BX160MA4**	143
626	133	2.0	4.7	2620	**C412_4.7 S4 ME4LB2**		138	**C412_4.7 P132 BE132MB2**		139
656	127	3.4	4.5	4980	**C512_4.5 S4 ME4LB2**		142	**C512_4.5 P132 BE132MB2**		143
695	120	1.7	4.2	2180	**C362_4.2 S4 ME4LB2**		134	**C362_4.2 P132 BE132MB2**		135
809	103	2.5	3.6	2540	**C412_3.6 S4 ME4LB2**		138	**C412_3.6 P132 BE132MB2**		139
838	100	2.0	3.5	2120	**C362_3.5 S4 ME4LB2**		134	**C362_3.5 P132 BE132MB2**		135
918	91	2.2	3.2	2090	**C362_3.2 S4 ME4LB2**		134	**C362_3.2 P132 BE132MB2**		135
1087	77	2.6	2.7	2020	**C362_2.7 S4 ME4LB2**		134	**C362_2.7 P132 BE132MB2**		135
1098	76	3.2	2.7	2410	**C412_2.7 S4 ME4LB2**		138	**C412_2.7 P132 BE132MB2**		139

11 kW

n_2 min-1	M_2 Nm	S	i	R_{n2} N	IE2	IE3		IE2	IE3	
7.4	12936	0.9	199.6	85000	**C1004_199.6 S5 ME5SA4**	**C1004_199.6 S5 MX5SB4**	159	**C1004_199.6 P160 BE160M4**	**C1004_199.6 P160 BX160MB4**	160
7.9	12012	1.0	185.4	85000	**C1004_185.4 S5 ME5SA4**	**C1004_185.4 S5 MX5SB4**	159	**C1004_185.4 P160 BE160M4**	**C1004_185.4 P160 BX160MB4**	160
9.1	10504	1.1	162.1	85000	**C1004_162.1 S5 ME5SA4**	**C1004_162.1 S5 MX5SB4**	159	**C1004_162.1 P160 BE160M4**	**C1004_162.1 P160 BX160MB4**	160
9.8	10073	1.2	150.4	85000	**C1003_150.4 S5 ME5SA4**	**C1003_150.4 S5 MX5SB4**	159	**C1003_150.4 P160 BE160M4**	**C1003_150.4 P160 BX160MB4**	160
10.5	9353	1.2	139.7	85000	**C1003_139.7 S5 ME5SA4**	**C1003_139.7 S5 MX5SB4**	159	**C1003_139.7 P160 BE160M4**	**C1003_139.7 P160 BX160MB4**	160
12.2	8070	1.5	120.5	85000	**C1003_120.5 S5 ME5SA4**	**C1003_120.5 S5 MX5SB4**	159	**C1003_120.5 P160 BE160M4**	**C1003_120.5 P160 BX160MB4**	160
12.6	7816	0.9	116.7	50800	**C903_116.7 S5 ME5SA4**	**C903_116.7 S5 MX5SB4**	156	**C903_116.7 P160 BE160M4**	**C903_116.7 P160 BX160MB4**	157
13.1	7493	1.6	111.9	85000	**C1003_111.9 S5 ME5SA4**	**C1003_111.9 S5 MX5SB4**	159	**C1003_111.9 P160 BE160M4**	**C1003_111.9 P160 BX160MB4**	160
13.7	7165	1.0	107.0	51000	**C903_107.0 S5 ME5SA4**	**C903_107.0 S5 MX5SB4**	156	**C903_107.0 P160 BE160M4**	**C903_107.0 P160 BX160MB4**	157
14.7	6683	1.8	99.8	85000	**C1003_99.8 S5 ME5SA4**	**C1003_99.8 S5 MX5SB4**	159	**C1003_99.8 P160 BE160M4**	**C1003_99.8 P160 BX160MB4**	160
15.3	6444	1.1	96.2	50800	**C903_96.2 S5 ME5SA4**	**C903_96.2 S5 MX5SB4**	156	**C903_96.2 P160 BE160M4**	**C903_96.2 P160 BX160MB4**	157
15.9	6205	1.9	92.7	85000	**C1003_92.7 S5 ME5SA4**	**C1003_92.7 S5 MX5SB4**	159	**C1003_92.7 P160 BE160M4**	**C1003_92.7 P160 BX160MB4**	160
16.7	5907	1.2	88.2	50700	**C903_88.2 S5 ME5SA4**	**C903_88.2 S5 MX5SB4**	156	**C903_88.2 P160 BE160M4**	**C903_88.2 P160 BX160MB4**	157
17.2	5729	2.1	85.6	85000	**C1003_85.6 S5 ME5SA4**	**C1003_85.6 S5 MX5SB4**	159	**C1003_85.6 P160 BE160M4**	**C1003_85.6 P160 BX160MB4**	160
18.1	5438	1.3	81.2	50700	**C903_81.2 S5 ME5SA4**	**C903_81.2 S5 MX5SB4**	156	**C903_81.2 P160 BE160M4**	**C903_81.2 P160 BX160MB4**	157
18.5	5320	2.3	79.4	85000	**C1003_79.4 S5 ME5SA4**	**C1003_79.4 S5 MX5SB4**	159	**C1003_79.4 P160 BE160M4**	**C1003_79.4 P160 BX160MB4**	160
19.7	4985	1.4	74.4	50200	**C903_74.4 S5 ME5SA4**	**C903_74.4 S5 MX5SB4**	156	**C903_74.4 P160 BE160M4**	**C903_74.4 P160 BX160MB4**	157
21.2	4649	2.6	69.4	84800	**C1003_69.4 S5 ME5SA4**	**C1003_69.4 S5 MX5SB4**	159	**C1003_69.4 P160 BE160M4**	**C1003_69.4 P160 BX160MB4**	160
22.8	4324	1.7	64.6	50000	**C903_64.6 S5 ME5SA4**	**C903_64.6 S5 MX5SB4**	156	**C903_64.6 P160 BE160M4**	**C903_64.6 P160 BX160MB4**	157
22.8	4317	2.8	64.5	83100	**C1003_64.5 S5 ME5SA4**	**C1003_64.5 S5 MX5SB4**	159	**C1003_64.5 P160 BE160M4**	**C1003_64.5 P160 BX160MB4**	160
23.5	4185	1.0	62.5	33000	**C803_62.5 S5 ME5SA4**	**C803_62.5 S5 MX5SB4**	153	**C803_62.5 P160 BE160M4**	**C803_62.5 P160 BX160MB4**	154
24.8	3964	1.8	59.2	49000	**C903_59.2 S5 ME5SA4**	**C903_59.2 S5 MX5SB4**	156	**C903_59.2 P160 BE160M4**	**C903_59.2 P160 BX160MB4**	157
25.7	3837	1.0	57.3	34200	**C803_57.3 S5 ME5SA4**	**C803_57.3 S5 MX5SB4**	153	**C803_57.3 P160 BE160M4**	**C803_57.3 P160 BX160MB4**	154
26.8	3674	2.0	54.9	48800	**C903_54.9 S5 ME5SA4**	**C903_54.9 S5 MX5SB4**	156	**C903_54.9 P160 BE160M4**	**C903_54.9 P160 BX160MB4**	157
29.2	3368	2.1	50.3	48000	**C903_50.3 S5 ME5SA4**	**C903_50.3 S5 MX5SB4**	156	**C903_50.3 P160 BE160M4**	**C903_50.3 P160 BX160MB4**	157
31	3177	1.2	47.4	33500	**C803_47.4 S5 ME5SA4**	**C803_47.4 S5 MX5SB4**	153	**C803_47.4 P160 BE160M4**	**C803_47.4 P160 BX160MB4**	154
34	2912	1.3	43.5	33100	**C803_43.5 S5 ME5SA4**	**C803_43.5 S5 MX5SB4**	153	**C803_43.5 P160 BE160M4**	**C803_43.5 P160 BX160MB4**	154
34	2878	2.5	43.0	47000	**C903_43.0 S5 ME5SA4**	**C903_43.0 S5 MX5SB4**	156	**C903_43.0 P160 BE160M4**	**C903_43.0 P160 BX160MB4**	157
37	2638	2.7	39.4	46100	**C903_39.4 S5 ME5SA4**	**C903_39.4 S5 MX5SB4**	156	**C903_39.4 P160 BE160M4**	**C903_39.4 P160 BX160MB4**	157
38	2675	1.2	39.1	30900	**C802_39.1 S5 ME5SA4**	**C802_39.1 S5 MX5SB4**	153	**C802_39.1 P160 BE160M4**	**C802_39.1 P160 BX160MB4**	154
42	2401	2.2	35.1	45000	**C902_35.1 S5 ME5SA4**	**C902_35.1 S5 MX5SB4**	156	**C902_35.1 P160 BE160M4**	**C902_35.1 P160 BX160MB4**	157
47	2143	1.7	31.3	30000	**C802_31.3 S5 ME5SA4**	**C802_31.3 S5 MX5SB4**	153	**C802_31.3 P160 BE160M4**	**C802_31.3 P160 BX160MB4**	154
50	2013	2.9	29.4	43400	**C902_29.4 S5 ME5SA4**	**C902_29.4 S5 MX5SB4**	156	**C902_29.4 P160 BE160M4**	**C902_29.4 P160 BX160MB4**	157
53	1896	1.1	27.7	17800	**C702_27.7 S5 ME5SA4**	**C702_27.7 S5 MX5SB4**	150	**C702_27.7 P160 BE160M4**	**C702_27.7 P160 BX160MB4**	151
54	1859	3.0	27.2	42700	**C902_27.2 S5 ME5SA4**	**C902_27.2 S5 MX5SB4**	156	**C902_27.2 P160 BE160M4**	**C902_27.2 P160 BX160MB4**	157
57	1775	2.1	25.9	29200	**C802_25.9 S5 ME5SA4**	**C802_25.9 S5 MX5SB4**	153	**C802_25.9 P160 BE160M4**	**C802_25.9 P160 BX160MB4**	154
61	1638	2.2	24.0	28700	**C802_24.0 S5 ME5SA4**	**C802_24.0 S5 MX5SB4**	153	**C802_24.0 P160 BE160M4**	**C802_24.0 P160 BX160MB4**	154
64	1563	1.3	22.9	17600	**C702_22.9 S5 ME5SA4**	**C702_22.9 S5 MX5SB4**	150	**C702_22.9 P160 BE160M4**	**C702_22.9 P160 BX160MB4**	151
66	1522	2.4	22.2	28400	**C802_22.2 S5 ME5SA4**	**C802_22.2 S5 MX5SB4**	153	**C802_22.2 P160 BE160M4**	**C802_22.2 P160 BX160MB4**	154
72	1404	2.5	20.5	28000	**C802_20.5 S5 ME5SA4**	**C802_20.5 S5 MX5SB4**	153	**C802_20.5 P160 BE160M4**	**C802_20.5 P160 BX160MB4**	154

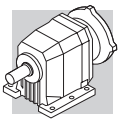

11 kW

n_2 min-1	M_2 Nm	S	i	R_{n2} N	IE2	IE3		IE2	IE3	
75	1341	1.0	19.6	10800	C612_19.6 S5 ME5SA4	C612_19.6 S5 MX5SB4	146	C612_19.6 P160 BE160M4	C612_19.6 P160 BX160MB4	147
76	1319	1.6	19.3	17300	C702_19.3 S5 ME5SA4	C702_19.3 S5 MX5SB4	150	C702_19.3 P160 BE160M4	C702_19.3 P160 BX160MB4	151
81	1235	3.0	18.1	27300	C802_18.1 S5 ME5SA4	C802_18.1 S5 MX5SB4	153	C802_18.1 P160 BE160M4	C802_18.1 P160 BX160MB4	154
83	1207	1.1	17.7	10700	C612_17.7 S5 ME5SA4	C612_17.7 S5 MX5SB4	146	C612_17.7 P160 BE160M4	C612_17.7 P160 BX160MB4	147
88	1143	1.8	16.7	16800	C702_16.7 S5 ME5SA4	C702_16.7 S5 MX5SB4	150	C702_16.7 P160 BE160M4	C702_16.7 P160 BX160MB4	151
88	1140	3.1	16.7	26900	C802_16.7 S5 ME5SA4	C802_16.7 S5 MX5SB4	153	C802_16.7 P160 BE160M4	C802_16.7 P160 BX160MB4	154
92	1090	1.2	15.9	10700	C612_15.9 S5 ME5SA4	C612_15.9 S5 MX5SB4	146	C612_15.9 P160 BE160M4	C612_15.9 P160 BX160MB4	147
96	1049	2.0	15.3	16800	C702_15.3 S5 ME5SA4	C702_15.3 S5 MX5SB4	150	C702_15.3 P160 BE160M4	C702_15.3 P160 BX160MB4	151
102	981	1.4	14.3	10500	C612_14.3 S5 ME5SA4	C612_14.3 S5 MX5SB4	146	C612_14.3 P160 BE160M4	C612_14.3 P160 BX160MB4	147
104	964	2.2	14.1	16400	C702_14.1 S5 ME5SA4	C702_14.1 S5 MX5SB4	150	C702_14.1 P160 BE160M4	C702_14.1 P160 BX160MB4	151
113	891	2.4	13.0	16400	C702_13.0 S5 ME5SA4	C702_13.0 S5 MX5SB4	150	C702_13.0 P160 BE160M4	C702_13.0 P160 BX160MB4	151
122	827	1.6	12.1	10300	C612_12.1 S5 ME5SA4	C612_12.1 S5 MX5SB4	146	C612_12.1 P160 BE160M4	C612_12.1 P160 BX160MB4	147
124	810	1.0	11.8	6810	C512_11.8 S5 ME5SA4	C512_11.8 S5 MX5SB4	142	C512_11.8 P160 BE160M4	C512_11.8 P160 BX160MB4	143
131	767	2.8	11.2	15800	C702_11.2 S5 ME5SA4	C702_11.2 S5 MX5SB4	150	C702_11.2 P160 BE160M4	C702_11.2 P160 BX160MB4	151
135	745	1.8	10.9	10100	C612_10.9 S5 ME5SA4	C612_10.9 S5 MX5SB4	146	C612_10.9 P160 BE160M4	C612_10.9 P160 BX160MB4	147
144	698	3.0	10.2	15700	C702_10.2 S5 ME5SA4	C702_10.2 S5 MX5SB4	150	C702_10.2 P160 BE160M4	C702_10.2 P160 BX160MB4	151
150	672	2.0	9.8	9910	C612_9.8 S5 ME5SA4	C612_9.8 S5 MX5SB4	146	C612_9.8 P160 BE160M4	C612_9.8 P160 BX160MB4	147
151	667	1.0	9.8	6690	C512_9.8 S5 ME5SA4	C512_9.8 S5 MX5SB4	142	C512_9.8 P160 BE160M4	C512_9.8 P160 BX160MB4	143
154	651	3.3	9.5	15400	C702_9.5 S5 ME5SA4	C702_9.5 S5 MX5SB4	150	C702_9.5 P160 BE160M4	C702_9.5 P160 BX160MB4	151
166	605	2.2	8.8	9690	C612_8.8 S5 ME5SA4	C612_8.8 S5 MX5SB4	146	C612_8.8 P160 BE160M4	C612_8.8 P160 BX160MB4	147
167	601	1.1	8.8	6640	C512_8.8 S5 ME5SA4	C512_8.8 S5 MX5SB4	142	C512_8.8 P160 BE160M4	C512_8.8 P160 BX160MB4	143
190	530	1.2	7.8	6510	C512_7.8 S5 ME5SA4	C512_7.8 S5 MX5SB4	142	C512_7.8 P160 BE160M4	C512_7.8 P160 BX160MB4	143
196	512	2.6	7.5	9390	C612_7.5 S5 ME5SA4	C612_7.5 S5 MX5SB4	146	C612_7.5 P160 BE160M4	C612_7.5 P160 BX160MB4	147
210	478	1.3	7.0	6430	C512_7.0 S5 ME5SA4	C512_7.0 S5 MX5SB4	142	C512_7.0 P160 BE160M4	C512_7.0 P160 BX160MB4	143
218	461	2.9	6.7	9150	C612_6.7 S5 ME5SA4	C612_6.7 S5 MX5SB4	146	C612_6.7 P160 BE160M4	C612_6.7 P160 BX160MB4	147
245	411	1.6	6.0	8670	C612_6.0 S5 ME5SA4	C612_6.0 S5 MX5SB4	146	C612_6.0 P160 BE160M4	C612_6.0 P160 BX160MB4	147
261	385	1.1	5.6	5880	C512_5.6 S5 ME5SA4	C512_5.6 S5 MX5SB4	142	C512_5.6 P160 BE160M4	C512_5.6 P160 BX160MB4	143
323	312	2.1	4.6	8160	C612_4.6 S5 ME5SA4	C612_4.6 S5 MX5SB4	146	C612_4.6 P160 BE160M4	C612_4.6 P160 BX160MB4	147
330	305	1.4	4.5	5660	C512_4.5 S5 ME5SA4	C512_4.5 S5 MX5SB4	142	C512_4.5 P160 BE160M4	C512_4.5 P160 BX160MB4	143
397	253	2.6	3.7	7760	C612_3.7 S5 ME5SA4	C612_3.7 S5 MX5SB4	146	C612_3.7 P160 BE160M4	C612_3.7 P160 BX160MB4	147
444	226	1.9	3.3	5340	C512_3.3 S5 ME5SA4	C512_3.3 S5 MX5SB4	142	C512_3.3 P160 BE160M4	C512_3.3 P160 BX160MB4	143
521	193	3.4	2.8	7240	C612_2.8 S5 ME5SA4	C612_2.8 S5 MX5SB4	146	C612_2.8 P160 BE160M4	C612_2.8 P160 BX160MB4	147
522	191	2.3	5.6	5140	C512_5.6 S5 ME5SA2		142	C512_5.6 P160 BE160MA2		143
559	180	2.2	2.6	5080	C512_2.6 S5 ME5SA4	C512_2.6 S5 MX5SB4	142	C512_2.6 P160 BE160M4	C512_2.6 P160 BX160MB4	143
660	151	2.9	4.5	4870	C512_4.5 S5 ME5SA2		142	C512_4.5 P160 BE160MA2		143

15 kW

n_2 min-1	M_2 Nm	S	i	R_{n2} N	IE2	IE3		IE2	IE3	
12.2	10984	1.1	120.5	83800	C1003_120.5 S5 ME5LA4	C1003_120.5 S5 MX5LA4	159	C1003_120.5 P160 BE160L4	C1003_120.5 P160 BX160LA4	160
13.1	10199	1.2	111.9	83300	C1003_111.9 S5 ME5LA4	C1003_111.9 S5 MX5LA4	159	C1003_111.9 P160 BE160L4	C1003_111.9 P160 BX160LA4	160
14.7	9096	1.3	99.8	82700	C1003_99.8 S5 ME5LA4	C1003_99.8 S5 MX5LA4	159	C1003_99.8 P160 BE160L4	C1003_99.8 P160 BX160LA4	160
15.9	8446	1.4	92.7	82400	C1003_92.7 S5 ME5LA4	C1003_92.7 S5 MX5LA4	159	C1003_92.7 P160 BE160L4	C1003_92.7 P160 BX160LA4	160
17.2	7798	1.5	85.6	81500	C1003_85.6 S5 ME5LA4	C1003_85.6 S5 MX5LA4	159	C1003_85.6 P160 BE160L4	C1003_85.6 P160 BX160LA4	160
18.1	7402	1.0	81.2	44300	C903_81.2 S5 ME5LA4	C903_81.2 S5 MX5LA4	156	C903_81.2 P160 BE160L4	C903_81.2 P160 BX160LA4	157
18.5	7241	1.7	79.4	81000	C1003_79.4 S5 ME5LA4	C1003_79.4 S5 MX5LA4	159	C1003_79.4 P160 BE160L4	C1003_79.4 P160 BX160LA4	160
19.7	6785	1.0	74.4	44800	C903_74.4 S5 ME5LA4	C903_74.4 S5 MX5LA4	156	C903_74.4 P160 BE160L4	C903_74.4 P160 BX160LA4	157
21.2	6328	1.9	69.4	79500	C1003_69.4 S5 ME5LA4	C1003_69.4 S5 MX5LA4	159	C1003_69.4 P160 BE160L4	C1003_69.4 P160 BX160LA4	160
22.8	5886	1.2	64.6	44500	C903_64.6 S5 ME5LA4	C903_64.6 S5 MX5LA4	156	C903_64.6 P160 BE160L4	C903_64.6 P160 BX160LA4	157
22.8	5876	2.0	64.5	78600	C1003_64.5 S5 ME5LA4	C1003_64.5 S5 MX5LA4	159	C1003_64.5 P160 BE160L4	C1003_64.5 P160 BX160LA4	160
24.8	5396	1.3	59.2	44400	C903_59.2 S5 ME5LA4	C903_59.2 S5 MX5LA4	156	C903_59.2 P160 BE160L4	C903_59.2 P160 BX160LA4	157
25.6	5227	2.3	57.4	77400	C1003_57.4 S5 ME5LA4	C1003_57.4 S5 MX5LA4	159	C1003_57.4 P160 BE160L4	C1003_57.4 P160 BX160LA4	160
26.8	5001	1.4	54.9	44300	C903_54.9 S5 ME5LA4	C903_54.9 S5 MX5LA4	156	C903_54.9 P160 BE160L4	C903_54.9 P160 BX160LA4	157
27.6	4854	2.5	53.3	76200	C1003_53.3 S5 ME5LA4	C1003_53.3 S5 MX5LA4	159	C1003_53.3 P160 BE160L4	C1003_53.3 P160 BX160LA4	160
29.2	4584	1.5	50.3	44100	C903_50.3 S5 ME5LA4	C903_50.3 S5 MX5LA4	156	C903_50.3 P160 BE160L4	C903_50.3 P160 BX160LA4	157

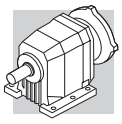

15 kW

n_2 min-1	M_2 Nm	S	i	R_{n2} N	IE2	IE3		IE2	IEC IE3	
32	4213	2.8	46.2	74500	**C1003_46.2 S5 ME5LA4**	**C1003_46.2 S5 MX5LA4**	159	**C1003_46.2 P160 BE160L4**	**C1003_46.2 P160 BX160LA4**	160
34	3964	1.0	43.5	30300	**C803_43.5 S5 ME5LA4**	**C803_43.5 S5 MX5LA4**	153	**C803_43.5 P160 BE160L4**	**C803_43.5 P160 BX160LA4**	154
34	3918	1.8	43.0	44100	**C903_43.0 S5 ME5LA4**	**C903_43.0 S5 MX5LA4**	156	**C903_43.0 P160 BE160L4**	**C903_43.0 P160 BX160LA4**	157
37	3591	2.0	39.4	43000	**C903_39.4 S5 ME5LA4**	**C903_39.4 S5 MX5LA4**	156	**C903_39.4 P160 BE160L4**	**C903_39.4 P160 BX160LA4**	157
38	3641	0.9	39.1	27300	**C802_39.1 S5 ME5LA4**	**C802_39.1 S5 MX5LA4**	153	**C802_39.1 P160 BE160L4**	**C802_39.1 P160 BX160LA4**	154
42	3268	1.7	35.1	42200	**C902_35.1 S5 ME5LA4**	**C902_35.1 S5 MX5LA4**	156	**C902_35.1 P160 BE160L4**	**C902_35.1 P160 BX160LA4**	157
47	2917	1.3	31.3	27500	**C802_31.3 S5 ME5LA4**	**C802_31.3 S5 MX5LA4**	153	**C802_31.3 P160 BE160L4**	**C802_31.3 P160 BX160LA4**	154
50	2740	2.2	29.4	41100	**C902_29.4 S5 ME5LA4**	**C902_29.4 S5 MX5LA4**	156	**C902_29.4 P160 BE160L4**	**C902_29.4 P160 BX160LA4**	157
54	2530	2.2	27.2	40700	**C902_27.2 S5 ME5LA4**	**C902_27.2 S5 MX5LA4**	156	**C902_27.2 P160 BE160L4**	**C902_27.2 P160 BX160LA4**	157
57	2416	1.5	25.9	27100	**C802_25.9 S5 ME5LA4**	**C802_25.9 S5 MX5LA4**	153	**C802_25.9 P160 BE160L4**	**C802_25.9 P160 BX160LA4**	154
59	2311	2.9	24.8	40000	**C902_24.8 S5 ME5LA4**	**C902_24.8 S5 MX5LA4**	156	**C902_24.8 P160 BE160L4**	**C902_24.8 P160 BX160LA4**	157
61	2230	1.6	24.0	26900	**C802_24.0 S5 ME5LA4**	**C802_24.0 S5 MX5LA4**	153	**C802_24.0 P160 BE160L4**	**C802_24.0 P160 BX160LA4**	154
64	2134	2.9	22.9	39500	**C902_22.9 S5 ME5LA4**	**C902_22.9 S5 MX5LA4**	156	**C902_22.9 P160 BE160L4**	**C902_22.9 P160 BX160LA4**	157
64	2128	1.0	22.9	15400	**C702_22.9 S5 ME5LA4**	**C702_22.9 S5 MX5LA4**	150	**C702_22.9 P160 BE160L4**	**C702_22.9 P160 BX160LA4**	151
66	2071	1.8	22.2	26600	**C802_22.2 S5 ME5LA4**	**C802_22.2 S5 MX5LA4**	153	**C802_22.2 P160 BE160L4**	**C802_22.2 P160 BX160LA4**	154
72	1912	1.9	20.5	26200	**C802_20.5 S5 ME5LA4**	**C802_20.5 S5 MX5LA4**	153	**C802_20.5 P160 BE160L4**	**C802_20.5 P160 BX160LA4**	154
73	1884	3.5	20.2	38500	**C902_20.2 S5 ME5LA4**	**C902_20.2 S5 MX5LA4**	156	**C902_20.2 P160 BE160L4**	**C902_20.2 P160 BX160LA4**	157
76	1795	1.2	19.3	15600	**C702_19.3 S5 ME5LA4**	**C702_19.3 S5 MX5LA4**	150	**C702_19.3 P160 BE160L4**	**C702_19.3 P160 BX160LA4**	151
81	1681	2.2	18.1	25800	**C802_18.1 S5 ME5LA4**	**C802_18.1 S5 MX5LA4**	153	**C802_18.1 P160 BE160L4**	**C802_18.1 P160 BX160LA4**	154
88	1555	1.3	16.7	15400	**C702_16.7 S5 ME5LA4**	**C702_16.7 S5 MX5LA4**	150	**C702_16.7 P160 BE160L4**	**C702_16.7 P160 BX160LA4**	151
88	1551	2.3	16.7	25500	**C802_16.7 S5 ME5LA4**	**C802_16.7 S5 MX5LA4**	153	**C802_16.7 P160 BE160L4**	**C802_16.7 P160 BX160LA4**	154
92	1483	0.9	15.9	9350	**C612_15.9 S5 ME5LA4**	**C612_15.9 S5 MX5LA4**	146	**C612_15.9 P160 BE160L4**	**C612_15.9 P160 BX160LA4**	147
96	1428	1.5	15.3	15400	**C702_15.3 S5 ME5LA4**	**C702_15.3 S5 MX5LA4**	150	**C702_15.3 P160 BE160L4**	**C702_15.3 P160 BX160LA4**	151
99	1388	2.7	14.9	25000	**C802_14.9 S5 ME5LA4**	**C802_14.9 S5 MX5LA4**	153	**C802_14.9 P160 BE160L4**	**C802_14.9 P160 BX160LA4**	154
102	1336	1.0	14.3	9280	**C612_14.3 S5 ME5LA4**	**C612_14.3 S5 MX5LA4**	146	**C612_14.3 P160 BE160L4**	**C612_14.3 P160 BX160LA4**	147
104	1312	1.6	14.1	15300	**C702_14.1 S5 ME5LA4**	**C702_14.1 S5 MX5LA4**	150	**C702_14.1 P160 BE160L4**	**C702_14.1 P160 BX160LA4**	151
107	1281	2.7	13.8	25000	**C802_13.8 S5 ME5LA4**	**C802_13.8 S5 MX5LA4**	153	**C802_13.8 P160 BE160L4**	**C802_13.8 P160 BX160LA4**	154
113	1213	1.7	13.0	15200	**C702_13.0 S5 ME5LA4**	**C702_13.0 S5 MX5LA4**	150	**C702_13.0 P160 BE160L4**	**C702_13.0 P160 BX160LA4**	151
122	1126	1.2	12.1	9270	**C612_12.1 S5 ME5LA4**	**C612_12.1 S5 MX5LA4**	146	**C612_12.1 P160 BE160L4**	**C612_12.1 P160 BX160LA4**	147
131	1044	2.1	11.2	14700	**C702_11.2 S5 ME5LA4**	**C702_11.2 S5 MX5LA4**	150	**C702_11.2 P160 BE160L4**	**C702_11.2 P160 BX160LA4**	151
135	1014	1.3	10.9	9140	**C612_10.9 S5 ME5LA4**	**C612_10.9 S5 MX5LA4**	146	**C612_10.9 P160 BE160L4**	**C612_10.9 P160 BX160LA4**	147
144	950	2.2	10.2	14600	**C702_10.2 S5 ME5LA4**	**C702_10.2 S5 MX5LA4**	150	**C702_10.2 P160 BE160L4**	**C702_10.2 P160 BX160LA4**	151
150	914	1.5	9.8	9090	**C612_9.8 S5 ME5LA4**	**C612_9.8 S5 MX5LA4**	146	**C612_9.8 P160 BE160L4**	**C612_9.8 P160 BX160LA4**	147
154	887	2.4	9.5	14400	**C702_9.5 S5 ME5LA4**	**C702_9.5 S5 MX5LA4**	150	**C702_9.5 P160 BE160L4**	**C702_9.5 P160 BX160LA4**	151
166	823	1.6	8.8	8930	**C612_8.8 S5 ME5LA4**	**C612_8.8 S5 MX5LA4**	146	**C612_8.8 P160 BE160L4**	**C612_8.8 P160 BX160LA4**	147
184	745	2.8	8.0	14200				**C702_8.0 P160 BE160L4**	**C702_8.0 P160 BX160LA4**	151
196	697	1.9	7.5	8760	**C612_7.5 S5 ME5LA4**	**C612_7.5 S5 MX5LA4**	146	**C612_7.5 P160 BE160L4**	**C612_7.5 P160 BX160LA4**	147
197	695	3.0	7.5	14000	**C702_7.5 S5 ME5LA4**	**C702_7.5 S5 MX5LA4**	150	**C702_7.5 P160 BE160L4**	**C702_7.5 P160 BX160LA4**	151
210	650	1.0	7.0	5800	**C512_7.0 S5 ME5LA4**	**C512_7.0 S5 MX5LA4**	142	**C512_7.0 P160 BE160L4**	**C512_7.0 P160 BX160LA4**	143
218	628	2.2	6.7	8570	**C612_6.7 S5 ME5LA4**	**C612_6.7 S5 MX5LA4**	146	**C612_6.7 P160 BE160L4**	**C612_6.7 P160 BX160LA4**	147
224	608	1.2	13.1	5760	**C512_13.1 S5 ME5SB2**		142	**C512_13.1 P160 BE160MB2**		143
243	560	2.4	12.1	8430	**C612_12.1 S5 ME5SB2**		146	**C612_12.1 P160 BE160MB2**		147
245	559	1.2	6.0	8130	**C612_6.0 S5 ME5LA4**	**C612_6.0 S5 MX5LA4**	146	**C612_6.0 P160 BE160L4**	**C612_6.0 P160 BX160LA4**	147
248	548	1.4	11.8	5720	**C512_11.8 S5 ME5SB2**		142	**C512_11.8 P160 BE160MB2**		143
270	504	2.7	10.9	8230	**C612_10.9 S5 ME5SB2**		146	**C612_10.9 P160 BE160MB2**		147
299	454	3.0	9.8	8090	**C612_9.8 S5 ME5SB2**		146	**C612_9.8 P160 BE160MB2**		147
301	451	1.5	9.8	5570	**C512_9.8 S5 ME5SB2**		142	**C512_9.8 P160 BE160MB2**		143
323	424	1.6	4.6	7690	**C612_4.6 S5 ME5LA4**	**C612_4.6 S5 MX5LA4**	146	**C612_4.6 P160 BE160L4**	**C612_4.6 P160 BX160LA4**	147
330	415	1.0	4.5	5250	**C512_4.5 S5 ME5LA4**	**C512_4.5 S5 MX5LA4**	142	**C512_4.5 P160 BE160L4**	**C512_4.5 P160 BX160LA4**	143
333	409	3.3	8.8	7880	**C612_8.8 S5 ME5SB2**		146	**C612_8.8 P160 BE160MB2**		147
334	407	1.7	8.8	5490	**C512_8.8 S5 ME5SB2**		142	**C512_8.8 P160 BE160MB2**		143
379	359	1.8	7.8	5370	**C512_7.8 S5 ME5SB2**		142	**C512_7.8 P160 BE160MB2**		143
397	344	1.9	3.7	7370	**C612_3.7 S5 ME5LA4**	**C612_3.7 S5 MX5LA4**	146	**C612_3.7 P160 BE160L4**	**C612_3.7 P160 BX160LA4**	147
421	323	1.9	7.0	5280	**C512_7.0 S5 ME5SB2**		142	**C512_7.0 P160 BE160MB2**		143
444	308	1.4	3.3	5080	**C512_3.3 S5 ME5LA4**	**C512_3.3 S5 MX5LA4**	142	**C512_3.3 P160 BE160L4**	**C512_3.3 P160 BX160LA4**	143
490	278	2.4	6.0	7030	**C612_6.0 S5 ME5SB2**		146	**C612_6.0 P160 BE160MB2**		147
521	263	2.5	2.8	6940	**C612_2.8 S5 ME5LA4**	**C612_2.8 S5 MX5LA4**	146	**C612_2.8 P160 BE160L4**	**C612_2.8 P160 BX160LA4**	147
522	261	1.7	5.6	4840	**C512_5.6 S5 ME5SB2**		142	**C512_5.6 P160 BE160MB2**		143
559	245	1.6	2.6	4940	**C512_2.6 S5 ME5LA4**	**C512_2.6 S5 MX5LA4**	142	**C512_2.6 P160 BE160L4**	**C512_2.6 P160 BX160LA4**	143
645	211	3.2	4.6	6580	**C612_4.6 S5 ME5SB2**		146	**C612_4.6 P160 BE160MB2**		147
660	206	2.1	4.5	4630	**C512_4.5 S5 ME5SB2**		142	**C512_4.5 P160 BE160MB2**		143
889	153	2.7	3.3	4330	**C512_3.3 S5 ME5SB2**		142	**C512_3.3 P160 BE160MB2**		143
1118	122	3.3	2.6	4100	**C512_2.6 S5 ME5SB2**		142	**C512_2.6 P160 BE160MB2**		143

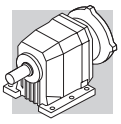

18.5 kW

n_2 min-1	M_2 Nm	S	i	R_{n2} N	IE2	IE3		IE2	IE3	
13.1	12489	1.0	111.9	76600				C1003_111.9 P180 BE180M4	C1003_111.9 P180 BX180M4	160
14.7	11138	1.1	99.8	76700				C1003_99.8 P180 BE180M4	C1003_99.8 P180 BX180M4	160
15.9	10342	1.2	92.7	76700				C1003_92.7 P180 BE180M4	C1003_92.7 P180 BX180M4	160
17.2	9548	1.3	85.6	76400				C1003_85.6 P180 BE180M4	C1003_85.6 P180 BX180M4	160
18.5	8866	1.4	79.4	76100				C1003_79.4 P180 BE180M4	C1003_79.4 P180 BX180M4	160
21.2	7748	1.5	69.4	75400				C1003_69.4 P180 BE180M4	C1003_69.4 P180 BX180M4	160
22.8	7207	1.0	64.6	40300				C903_64.6 P180 BE180M4	C903_64.6 P180 BX180M4	157
22.8	7195	1.7	64.5	74800				C1003_64.5 P180 BE180M4	C1003_64.5 P180 BX180M4	160
24.8	6607	1.1	59.2	40500				C903_59.2 P180 BE180M4	C903_59.2 P180 BX180M4	157
25.6	6400	1.9	57.4	73700				C1003_57.4 P180 BE180M4	C1003_57.4 P180 BX180M4	160
26.8	6124	1.2	54.9	40700				C903_54.9 P180 BE180M4	C903_54.9 P180 BX180M4	157
27.6	5943	2.0	53.3	73100				C1003_53.3 P180 BE180M4	C1003_53.3 P180 BX180M4	160
29.2	5614	1.3	50.3	40700				C903_50.3 P180 BE180M4	C903_50.3 P180 BX180M4	157
32	5159	2.3	46.2	71600				C1003_46.2 P180 BE180M4	C1003_46.2 P180 BX180M4	160
34	4797	1.5	43.0	40600				C903_43.0 P180 BE180M4	C903_43.0 P180 BX180M4	157
34	4790	2.5	42.9	70800				C1003_42.9 P180 BE180M4	C1003_42.9 P180 BX180M4	160
37	4397	1.6	39.4	40500				C903_39.4 P180 BE180M4	C903_39.4 P180 BX180M4	157
40	4122	2.9	36.9	69000				C1003_36.9 P180 BE180M4	C1003_36.9 P180 BX180M4	160
42	4001	1.3	35.1	39800				C902_35.1 P180 BE180M4	C902_35.1 P180 BX180M4	157
43	3828	3.1	34.3	68100				C1003_34.3 P180 BE180M4	C1003_34.3 P180 BX180M4	160
47	3572	1.0	31.3	25000				C802_31.3 P180 BE180M4	C802_31.3 P180 BX180M4	154
50	3298	2.8	29.6	65800				C1002_29.6 P180 BE180M4	C1002_29.6 P180 BX180M4	160
50	3356	1.8	29.4	39100				C902_29.4 P180 BE180M4	C902_29.4 P180 BX180M4	157
54	3098	1.8	27.2	38800				C902_27.2 P180 BE180M4	C902_27.2 P180 BX180M4	157
57	2958	1.3	25.9	25300				C802_25.9 P180 BE180M4	C802_25.9 P180 BX180M4	154
59	2830	2.3	24.8	38400				C902_24.8 P180 BE180M4	C902_24.8 P180 BX180M4	157
61	2731	1.3	24.0	25000				C802_24.0 P180 BE180M4	C802_24.0 P180 BX180M4	154
64	2613	2.4	22.9	37900				C902_22.9 P180 BE180M4	C902_22.9 P180 BX180M4	157
66	2536	1.5	22.2	25100				C802_22.2 P180 BE180M4	C802_22.2 P180 BX180M4	154
72	2341	1.5	20.5	24900				C802_20.5 P180 BE180M4	C802_20.5 P180 BX180M4	154
73	2307	2.9	20.2	37200				C902_20.2 P180 BE180M4	C902_20.2 P180 BX180M4	157
76	2198	1.0	19.3	14100				C702_19.3 P180 BE180M4	C702_19.3 P180 BX180M4	151
79	2130	2.9	18.7	36700				C902_18.7 P180 BE180M4	C902_18.7 P180 BX180M4	157
81	2058	1.8	18.1	24700				C802_18.1 P180 BE180M4	C802_18.1 P180 BX180M4	154
85	1973	3.3	17.3	36200				C902_17.3 P180 BE180M4	C902_17.3 P180 BX180M4	157
88	1904	1.1	16.7	13800				C702_16.7 P180 BE180M4	C702_16.7 P180 BX180M4	151
88	1900	1.8	16.7	24400				C802_16.7 P180 BE180M4	C802_16.7 P180 BX180M4	154
96	1748	1.2	15.3	13800				C702_15.3 P180 BE180M4	C702_15.3 P180 BX180M4	151
99	1700	2.2	14.9	24000				C802_14.9 P180 BE180M4	C802_14.9 P180 BX180M4	154
104	1607	1.3	14.1	13900				C702_14.1 P180 BE180M4	C702_14.1 P180 BX180M4	151
107	1569	2.2	13.8	23700				C802_13.8 P180 BE180M4	C802_13.8 P180 BX180M4	154
113	1485	1.4	13.0	13800				C702_13.0 P180 BE180M4	C702_13.0 P180 BX180M4	151
122	1378	1.0	12.1	8420				C612_12.1 P180 BE180M4	C612_12.1 P180 BX180M4	147
122	1370	2.7	12.0	23500				C802_12.0 P180 BE180M4	C802_12.0 P180 BX180M4	154
131	1278	1.7	11.2	13800				C702_11.2 P180 BE180M4	C702_11.2 P180 BX180M4	151
133	1265	2.8	11.1	22900				C802_11.1 P180 BE180M4	C802_11.1 P180 BX180M4	154
135	1241	1.1	10.9	8360				C612_10.9 P180 BE180M4	C612_10.9 P180 BX180M4	147
144	1164	1.8	10.2	13700				C702_10.2 P180 BE180M4	C702_10.2 P180 BX180M4	151
150	1119	1.2	9.8	8400				C612_9.8 P180 BE180M4	C612_9.8 P180 BX180M4	147
154	1086	2.0	9.5	13600				C702_9.5 P180 BE180M4	C702_9.5 P180 BX180M4	151
166	1008	1.3	8.8	8300				C612_8.8 P180 BE180M4	C612_8.8 P180 BX180M4	147
184	912	2.3	8.0	13500				C702_8.0 P180 BE180M4	C702_8.0 P180 BX180M4	151
196	853	1.6	7.5	8230				C612_7.5 P180 BE180M4	C612_7.5 P180 BX180M4	147
197	850	2.4	7.5	13400				C702_7.5 P180 BE180M4	C702_7.5 P180 BX180M4	151
218	768	1.8	6.7	8090				C612_6.7 P180 BE180M4	C612_6.7 P180 BX180M4	147
235	713	2.7	6.3	13300				C702_6.3 P180 BE180M4	C702_6.3 P180 BX180M4	151
245	684	1.0	6.0	7550				C612_6.0 P180 BE180M4	C612_6.0 P180 BX180M4	147

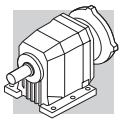

18.5 kW

n_2 min-1	M_2 Nm	S	i	R_{n2} N	IE2	IE3		IE2	IE3	
251	667	2.8	5.9	13200				C702_5.9 P180 BE180M4	C702_5.9 P180 BX180M4	151
270	621	2.2	10.9	7840	C612_10.9 S5 ME5LA2		146	C612_10.9 P160 BE160L2		147
300	560	2.4	9.8	7740	C612_9.8 S5 ME5LA2		146	C612_9.8 P160 BE160L2		147
302	556	1.2	9.8	5190	C512_9.8 S5 ME5LA2		142	C512_9.8 P160 BE160L2		143
322	521	3.3	4.6	13000				C702_4.6 P180 BE180M4	C702_4.6 P180 BX180M4	151
323	519	1.3	4.6	7300				C612_4.6 P180 BE180M4	C612_4.6 P180 BX180M4	147
333	504	2.7	8.8	7570	C612_8.8 S5 ME5LA2		146	C612_8.8 P160 BE160L2		147
335	501	1.4	8.8	5160	C512_8.8 S5 ME5LA2		142	C512_8.8 P160 BE160L2		143
380	442	1.4	7.8	5070	C512_7.8 S5 ME5LA2		142	C512_7.8 P160 BE160L2		143
393	427	3.2	7.5	7350	C612_7.5 S5 ME5LA2		146	C612_7.5 P160 BE160L2		147
397	422	1.6	3.7	7060				C612_3.7 P180 BE180M4	C612_3.7 P180 BX180M4	147
422	398	1.6	7.0	5010	C512_7.0 S5 ME5LA2		142	C512_7.0 P160 BE160L2		143
437	384	3.5	6.7	7170	C612_6.7 S5 ME5LA2		146	C612_6.7 P160 BE160L2		147
444	377	1.1	3.3	4750				C512_3.3 P180 BE180M4	C512_3.3 P180 BX180M4	143
491	342	1.9	6.0	6780	C612_6 S5 ME5LA2		146	C612_6.0 P160 BE160L2		147
521	321	2.1	2.8	6700				C612_2.8 P180 BE180M4		147
523	321	1.4	5.6	4580	C512_5.6 S5 ME5LA2		142	C512_5.6 P160 BE160L2		143
559	300	1.3	2.6	4600				C512_2.6 P180 BE180M4	C512_2.6 P180 BX180M4	143
646	260	2.6	4.6	6390	C612_4.6 S5 ME5LA2		146	C612_4.6 P160 BE160L2		147
661	254	1.7	4.5	4420	C512_4.5 S5 ME5LA2		142	C512_4.5 P160 BE160L2		143
796	211	3.2	3.7	6080	C612_3.7 S5 ME5LA2		146	C612_3.7 P160 BE160L2		147
890	188	2.2	3.3	4180	C512_3.3 S5 ME5LA2		142	C512_3.3 P160 BE160L2		143
1120	150	2.7	2.6	3980	C512_2.6 S5 ME5LA2		142	C512_2.6 P160 BE160L2		143

22 kW

n_2 min-1	M_2 Nm	S	i	R_{n2} N	IE2	IE3		IE2	IE3	
14.7	13273	0.9	99.8	70600				C1003_99.8 P180 BE180L4	C1003_99.8 P180 BX180L4	160
15.9	12325	1.0	92.7	70900				C1003_92.7 P180 BE180L4	C1003_92.7 P180 BX180L4	160
17.2	11378	1.1	85.6	71100				C1003_85.6 P180 BE180L4	C1003_85.6 P180 BX180L4	160
18.5	10565	1.1	79.4	71200				C1003_79.4 P180 BE180L4	C1003_79.4 P180 BX180L4	160
21.2	9233	1.3	69.4	71000				C1003_69.4 P180 BE180L4	C1003_69.4 P180 BX180L4	160
22.8	8574	1.4	64.5	70800				C1003_64.5 P180 BE180L4	C1003_64.5 P180 BX180L4	160
24.8	7873	0.9	59.2	36700				C903_59.2 P180 BE180L4	C903_59.2 P180 BX180L4	157
25.6	7627	1.6	57.4	70300				C1003_57.4 P180 BE180L4	C1003_57.4 P180 BX180L4	160
26.8	7298	1.0	54.9	36000				C903_54.9 P180 BE180L4	C903_54.9 P180 BX180L4	157
27.6	7082	1.7	53.3	69800				C1003_53.3 P180 BE180L4	C1003_53.3 P18 0BX180L4	160
29.2	6690	1.1	50.3	37400				C903_50.3 P180 BE180L4	C903_50.3 P180 BX180L4	157
32	6147	2.0	46.2	68800				C1003_46.2 P180 BE180L4	C1003_46.2 P180 BX180L4	160
34	5716	1.3	43.0	37500				C903_43.0 P180 BE180L4	C903_43.0 P180 BX180L4	157
34	5708	2.1	42.9	68100				C1003_42.9 P180 BE180L4	C1003_42.9 P180 BX180L4	160
37	5240	1.4	39.4	37500				C903_39.4 P180 BE180L4	C903_39.4 P180 BX180L4	157
40	4912	2.4	36.9	66700				C1003_36.9 P180 BE180L4	C1003_36.9 P180 BX180L4	160
42	4768	1.1	35.1	37400				C902_35.1 P180 BE180L4	C902_35.1 P180 BX180L4	157
43	4561	2.6	34.3	65900				C1003_34.3 P180 BE180L4	C1003_34.3 P180 BX180L4	160
50	3931	2.3	29.6	64100				C1002_29.6 P180 BE180L4	C1002_29.6 P180 BX180L4	160
50	3999	1.5	29.4	37100				C902_29.4 P180 BE180L4	C902_29.4 P180 BX180L4	157
54	3691	1.5	27.2	36900				C902_27.2 P180 BE180L4	C902_27.2 P180 BX180L4	157
57	3525	1.0	25.9	23000				C802_25.9 P180 BE180L4	C802_25.9 P180 BX180L4	154
59	3373	2.0	24.8	36600				C902_24.8 P180 BE180L4	C902_24.8 P180 BX180L4	157
61	3254	1.1	24.0	23700				C802_24.0 P180 BE180L4	C802_24.0 P180 BX180L4	154
64	3113	2.0	22.9	36400				C902_22.9 P180 BE180L4	C902_22.9 P180 BX180L4	157
66	3022	1.2	22.2	23500				C802_22.2 P180 BE180L4	C802_22.2 P180 BX180L4	154
72	2789	1.3	20.5	23400				C802_20.5 P180 BE180L4	C802_20.5 P180 BX180L4	154
73	2749	2.4	20.2	35800				C902_20.2 P180 BE180L4	C902_20.2 P180 BX180L4	157
79	2538	2.4	18.7	35400				C902_18.7 P180 BE180L4	C902_18.7 P180 BX180L4	157
81	2452	1.5	18.1	23300				C802_18.1 P180 BE180L4	C802_18.1 P180 BX180L4	154

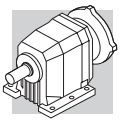

22 kW

n_2 min-1	M_2 Nm	S	i	R_{n2} N	IE2	IE3		IE2	IE3	
85	2352	2.8	17.3	34900				C902_17.3 P180 BE180L4	C902_17.3 P180 BX180L4	157
88	2269	0.9	16.7	12400				C702_16.7 P180 BE180L4	C702_16.7 P180 BX180L4	151
88	2264	1.5	16.7	23100				C802_16.7 P180 BE180L4	C802_16.7 P180 BX180L4	154
92	2171	2.9	16.0	34600				C902_16.0 P180 BE180L4	C902_16.0 P180 BX180L4	157
96	2083	1.0	15.3	12400				C702_15.3 P180 BE180L4	C702_15.3 P180 BX180L4	151
99	2026	1.8	14.9	22900				C802_14.9 P180 BE180L4	C802_14.9 P180 BX180L4	154
104	1915	1.1	14.1	12700				C702_14.1 P180 BE180L4	C702_14.1 P180 BX180L4	151
106	1882	3.2	13.9	33700				C902_13.9 P180 BE180L4	C902_13.9 P180 BX180L4	157
107	1870	1.9	13.8	22700				C802_13.8 P180 BE180L4	C802_13.8 P180 BX180L4	154
113	1770	1.2	13.0	12700				C702_13.0 P180 BE180L4	C702_13.0 P180 BX180L4	151
122	1633	2.3	12.0	22500				C802_12.0 P180 BE180L4	C802_12.0 P180 BX180L4	154
131	1523	1.4	11.2	12900				C702_11.2 P180 BE180L4	C702_11.2 P180 BX180L4	151
133	1507	2.3	11.1	22100				C802_11.1 P180 BE180L4	C802_11.1 P180 BX180L4	154
135	1479	0.9	10.9	7580				C612_10.9 P180 BE180L4	C612_10.9 P180 BX180L4	147
144	1387	1.5	10.2	12800				C702_10.2 P180 BE180L4	C702_10.2 P180 BX180L4	151
150	1334	1.0	9.8	7710				C612_9.8 P180 BE180L4	C612_9.8 P180 BX180L4	147
153	1305	2.8	9.6	21900				C802_9.6 P180 BE180L4	C802_9.6 P180 BX180L4	154
154	1294	1.7	9.5	12800				C702_9.5 P180 BE180L4	C702_9.5 P180 BX180L4	151
166	1204	2.9	8.9	21300				C802_8.9 P180 BE180L4	C802_8.9 P180 BX180L4	154
166	1201	1.1	8.8	7660				C612_8.8 P180 BE180L4	C612_8.8 P180 BX180L4	147
184	1087	1.9	8.0	12700				C702_8.0 P180 BE180L4	C702_8.0 P180 BX180L4	151
196	1017	1.3	7.5	7690				C612_7.5 P180 BE180L4	C612_7.5 P180 BX180L4	147
197	1013	2.0	7.5	12700				C702_7.5 P180 BE180L4	C702_7.5 P180 BX180L4	151
218	916	1.5	6.7	7600				C612_6.7 P180 BE180L4	C612_6.7 P180 BX180L4	147
235	850	2.3	6.3	12500				C702_6.3 P180 BE180L4	C702_6.3 P180 BX180L4	151
251	795	2.4	5.9	12300				C702_5.9 P180 BE180L4	C702_5.9 P180 BX180L4	151
322	621	2.7	4.6	11900				C702_4.6 P180 BE180L4	C702_4.6 P180 BX180L4	151
323	619	1.1	4.6	6910				C612_4.6 P180 BE180L4	C612_4.6 P180 BX180L4	147
397	503	1.3	3.7	6740				C612_3.7 P180 BE180L4	C612_3.7 P180 BX180L4	147
444	449	0.9	3.3	4350				C512_3.3 P180 BE180L4	C512_3.3 P180 BX180L4	143
521	383	1.7	2.8	6450				C612_2.8 P180 BE180L4	C612_2.8 P180 BX180L4	147
559	357	1.1	2.6	4290				C512_2.6 P180 BE180L4	C512_2.6 P180 BX180L4	143

30 kW

n_2 min-1	M_2 Nm	S	i	R_{n2} N	IE...		IE...	
21.2	12584	1.0	69.4	61300			C1003_69.4 P200 IEC200L4	163
25.6	10395	1.2	57.4	62200			C1003_57.4 P200 IEC200L4	163
32	8379	1.4	46.2	62300			C1003_46.2 P200 IEC200L4	163
37	7142	1.0	39.4	31900			C903_39.4 P200 IEC200L4	160
50	5472	1.7	29.6	59800			C1002_29.6 P200 IEC200L4	163
50	5450	1.1	29.4	32600			C902_29.4 P200 IEC200L4	160
64	4243	1.5	22.9	32900			C902_22.9 P200 IEC200L4	160
66	4119	2.4	22.2	57700			C1002_22.2 P200 IEC200L4	163
79	3459	1.8	18.7	32600			C902_18.7 P200 IEC200L4	160
79	3456	3.1	18.7	56000			C1002_18.7 P200 IEC200L4	163
99	2761	1.3	14.9	20600			C802_14.9 P200 IEC200L4	157
106	2566	2.4	13.9	31500			C902_13.9 P200 IEC200L4	160
122	2225	1.7	12.0	20500			C802_12.0 P200 IEC200L4	157
131	2079	2.7	11.2	30600			C902_11.2 P200 IEC200L4	160
153	1778	2.1	9.6	20100			C802_9.6 P200 IEC200L4	157
154	1763	1.2	9.5	11000			C702_9.5 P200 IEC200L4	154
184	1482	1.4	8.0	11600			C702_8.0 P200 IEC200L4	154
193	1412	2.4	7.6	19500			C802_7.6 P200 IEC200L4	157
209	1303	2.6	7.0	19300			C802_7.0 P200 IEC200L4	157
235	1158	1.7	6.3	11500			C702_6.3 P200 IEC200L4	154
241	1131	2.8	6.1	18900			C802_6.1 P200 IEC200L4	157
261	1044	3.0	5.6	18600			C802_5.6 P200 IEC200L4	157
322	846	2.0	4.6	11000			C702_4.6 P200 IEC200L4	154

Die technischen Daten müssen als Anhaltswert betrachtet werden, die genaue Konfiguration muss mit den Daten der Motorenlieferanten für Motoren mit Leistungen größer als 22kW abgestimmt werden.

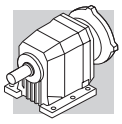

37 kW

n_2 min-1	M_2 Nm	S	i	R_{n2} N	IE...		IEC IE...	
25.8	12734	0.9	57.4	55300			**C1003_57.4 P225 IEC225S4**	163
32	10264	1.2	46.2	56600			**C1003_46.2 P225 IEC225S4**	163
40	8201	1.4	36.9	57000			**C1003_36.9 P225 IEC225S4**	163
60	5631	1.2	24.8	29500			**C902_24.8 P225 IEC225S4**	160
61	5467	2.0	24.1	55200			**C1002_24.1 P225 IEC225S4**	163
79	4237	1.5	18.7	30100			**C902_18.7 P225 IEC225S4**	160
79	4234	2.5	18.7	53600			**C1002_18.7 P225 IEC225S4**	163
89	3779	0.9	16.7	18500			**C802_16.7 P225 IEC225S4**	157
107	3143	1.9	13.9	29700			**C902_13.9 P225 IEC225S4**	160
108	3122	1.1	13.8	18800			**C802_13.8 P225 IEC225S4**	157
123	2726	1.4	12.0	18800			**C802_12.0 P225 IEC225S4**	157
132	2546	2.2	11.2	29100			**C902_11.2 P225 IEC225S4**	160
154	2178	1.7	9.6	18800			**C802_9.6 P225 IEC225S4**	157
164	2046	2.5	9.0	28300			**C902_9.0 P225 IEC225S4**	160
194	1730	2.0	7.6	18500			**C802_7.6 P225 IEC225S4**	157
202	1661	2.9	7.3	27400			**C902_7.3 P225 IEC225S4**	160
242	1386	2.3	6.1	18000			**C802_6.1 P225 IEC225S4**	157
264	1271	3.5	5.6	26100			**C902_5.6 P225 IEC225S4**	160
286	1173	3.7	5.2	25700			**C902_5.2 P225 IEC225S4**	160

45 kW

n_2 min-1	M_2 Nm	S	i	R_{n2} N	IE...		IEC IE...	
32	12483	1.0	46.2	50200			**C1003_46.2 P225 IEC225M4**	163
40	9974	1.2	36.9	51900			**C1003_36.9 P225 IEC225M4**	163
50	8153	1.1	29.6	51900			**C1002_29.6 P225 IEC225M4**	163
65	6322	1.0	22.9	26400			**C902_22.9 P225 IEC225M4**	160
67	6137	1.6	22.2	51700			**C1002_22.2 P225 IEC225M4**	163
79	5153	1.2	18.7	27200			**C902_18.7 P225 IEC225M4**	160
79	5149	2.1	18.7	51000			**C1002_18.7 P225 IEC225M4**	163
107	3822	1.6	13.9	27600			**C902_13.9 P225 IEC225M4**	160
108	3797	0.9	13.8	16700			**C802_13.8 P225 IEC225M4**	157
123	3315	1.1	12.0	17000			**C802_12.0 P225 IEC225M4**	157
132	3097	1.8	11.2	27400			**C902_11.2 P225 IEC225M4**	160
154	2649	1.4	9.6	17300			**C802_9.6 P225 IEC225M4**	157
164	2488	2.1	9.0	26900			**C902_9.0 P225 IEC225M4**	160
194	2104	1.6	7.6	17300			**C802_7.6 P225 IEC225M4**	157
202	2020	2.4	7.3	26300			**C902_7.3 P225 IEC225M4**	160
262	1556	2.0	5.6	17000			**C802_5.6 P225 IEC225M4**	157
264	1546	2.8	5.6	25200			**C902_5.6 P225 IEC225M4**	160
279	1464	2.9	5.2	25200			**C902_5.2 P225 IEC225M4**	160

55 kW

n_2 min-1	M_2 Nm	S	i	R_{n2} N	IE...		IEC IE...	
40	12191	1.0	36.9	45400			**C1003_36.9 P250 IEC250M4**	163
50	9965	0.9	29.6	46700			**C1002_29.6 P250 IEC250M4**	163
61	8126	1.3	24.1	47500			**C1002_24.1 P250 IEC250M4**	163
79	6298	1.0	18.7	22200			**C902_18.7 P250 IEC250M4**	160
79	6294	1.7	18.7	47700			**C1002_18.7 P250 IEC250M4**	163
107	4672	1.3	13.9	24900			**C902_13.9 P250 IEC250M4**	160
110	4549	2.1	13.5	46500			**C1002_13.5 P250 IEC250M4**	163
135	3686	2.4	10.9	45400			**C1002_10.9 P250 IEC250M4**	163
164	3050	2.7	9.0	44100			**C1002_9.0 P250 IEC250M4**	163
164	3041	1.7	9.0	25200			**C902_9.0 P250 IEC250M4**	160
202	2468	2.0	7.3	24900			**C902_7.3 P250 IEC250M4**	160
209	2383	3.2	7.1	42300			**C1002_7.1 P250 IEC250M4**	163
264	1889	2.3	5.6	24200			**C902_5.6 P250 IEC250M4**	160
286	1744	2.5	5.2	24000			**C902_5.2 P250 IEC250M4**	160

Die technischen Daten müssen als Anhaltswert betrachtet werden, die genaue Konfiguration muss mit den Daten der Motorenlieferanten für Motoren mit Leistungen größer als 22kW abgestimmt werden.

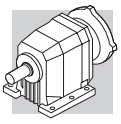

75 kW

n_2 min-1	M_2 Nm	S	i	R_{n2} N	IE...		IEC IE...	
62	11044	1.0	24.1	38100			**C1002_24.1 P280 IEC280S4**	163
67	10194	1.0	22.2	40000			**C1002_22.2 P280 IEC280S4**	163
73	9266	1.2	20.2	40500			**C1002_20.2 P280 IEC280S4**	163
80	8553	1.3	18.7	41100			**C1002_18.7 P280 IEC280S4**	163
90	7552	1.3	16.5	41400			**C1002_16.5 P280 IEC280S4**	163
98	6971	1.4	15.2	41800			**C1002_15.2 P280 IEC280S4**	163
110	6182	1.5	13.5	41700			**C1002_13.5 P280 IEC280S4**	163
119	5707	1.6	12.5	41800			**C1002_12.5 P280 IEC280S4**	163
136	5010	1.8	10.9	41500			**C1002_10.9 P280 IEC280S4**	163
147	4624	1.9	10.1	41400			**C1002_10.1 P280 IEC280S4**	163
164	4146	2.0	9.0	40900			**C1002_9.0 P280 IEC280S4**	163
178	3827	2.1	8.4	40600			**C1002_8.4 P280 IEC280S4**	163
210	3238	2.4	7.1	39700			**C1002_7.1 P280 IEC280S4**	163
228	2989	2.5	6.5	39300			**C1002_6.5 P280 IEC280S4**	163
278	2444	2.8	5.3	38100			**C1002_5.3 P280 IEC280S4**	163
302	2256	3.0	4.9	37600			**C1002_4.9 P280 IEC280S4**	163

90 kW

n_2 min-1	M_2 Nm	S	i	R_{n2} N	IE...		IEC IE...	
73	11119	1.0	20.2	30600			**C1002_20.2 P280 IEC280M4**	163
80	10264	1.0	18.7	35500			**C1002_18.7 P280 IEC280M4**	163
90	9062	1.1	16.5	37100			**C1002_16.5 P280 IEC280M4**	163
98	8365	1.2	15.2	37800			**C1002_15.2 P280 IEC280M4**	160
110	7419	1.3	13.5	38100			**C1002_13.5 P280 IEC280M4**	160
119	6848	1.4	12.5	38500			**C1002_12.5 P280 IEC280M4**	163
136	6012	1.5	10.9	38600			**C1002_10.9 P280 IEC280M4**	160
147	5549	1.6	10.1	38700			**C1002_10.1 P280 IEC280M4**	163
164	4975	1.7	9.0	38500			**C1002_9.0 P280 IEC280M4**	160
178	4592	1.8	8.4	38400			**C1002_8.4 P280 IEC280M4**	163
210	3886	2.0	7.1	37800			**C1002_7.1 P280 IEC280M4**	160
228	3587	2.1	6.5	37600			**C1002_6.5 P280 IEC280M4**	157
278	2933	2.4	5.3	36600			**C1002_5.3 P280 IEC280M4**	157
302	2707	2.5	4.9	36300			**C1002_4.9 P280 IEC280M4**	154

Die technischen Daten müssen als Anhaltswert betrachtet werden, die genaue Konfiguration muss mit den Daten der Motorenlieferanten für Motoren mit Leistungen größer als 22kW abgestimmt werden.

C 12 100 Nm

	i	n_1 = 2800 min^{-1}					n_1 = 1400 min^{-1}					
		n_2 min^{-1}	M_{n2} Nm	P_{n1} kW	R_{n1} N	R_{n2} N	n_2 min^{-1}	M_{n2} Nm	P_{n1} kW	R_{n1} N	R_{n2} N	
C 12 2_2.8	2.8	1012	30	3.3	750	600	506	37	2.1	990	790	
C 12 2_3.2	3.2	873	32	3.1	730	600	436	40	1.9	960	790	
C 12 2_3.7	3.7	767	34	2.9	720	610	383	42	1.8	960	800	
C 12 2_4.3	4.3	649	36	2.6	710	630	325	45	1.6	890	800	
C 12 2_4.9	4.9	575	38	2.4	710	640	288	48	1.5	880	800	
C 12 2_5.6	5.6	500	40	2.2	680	650	250	51	1.4	840	810	
C 12 2_6.2	6.2	449	42	2.1	650	660	225	53	1.3	810	830	
C 12 2_7.6	7.6	367	45	1.8	1140	1220	184	56	1.1	1300	1540	
C 12 2_8.8	8.8	317	47	1.6	1140	1280	158	59	1.0	1300	1620	
C 12 2_10.1	10.1	278	49	1.5	1150	1340	139	63	0.97	1300	1680	
C 12 2_11.9	11.9	236	53	1.4	1140	1390	118	67	0.87	1300	1760	
C 12 2_13.4	13.4	209	55	1.3	1140	1460	104	70	0.81	1300	1840	
C 12 2_15.4	15.4	182	58	1.2	1130	1500	91	73	0.73	1300	1930	125
C 12 2_17.2	17.2	163	60	1.1	1130	1590	82	76	0.68	1300	2000	
C 12 2_18.4	18.4	152	62	1.0	1120	1620	76	78	0.65	1300	2000	
C 12 2_20.6	20.6	136	65	1.0	1110	1670	68	82	0.61	1300	2000	
C 12 2_23.2	23.2	120	67	0.89	1110	1720	60	85	0.56	1300	2000	
C 12 2_25.4	25.4	110	69	0.84	1110	1800	55	88	0.54	1300	2000	
C 12 2_29.5	29.5	95	74	0.77	1100	1880	47	93	0.49	1300	2000	
C 12 2_32.8	32.8	85	75	0.71	1090	1970	43	90	0.42	1300	2000	
C 12 2_37.0	37.0	76	79	0.66	1070	2000	38	90	0.38	1300	2000	
C 12 2_42.3	42.3	66	84	0.61	1060	2000	33	100	0.36	1300	2000	
C 12 2_47.6	47.6	59	85	0.55	1050	2000	29.4	90	0.29	1300	2000	
C 12 2_55.2	55.2	51	89	0.50	1030	2000	25.4	90	0.25	1300	2000	
C 12 2_66.2	66.2	42	86	0.40	1060	2000	21.2	90	0.21	1300	2000	

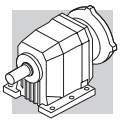

C 12 — 100 Nm

	i	n_1 = 900 min^{-1}					n_1 = 500 min^{-1}					
		n_2 min^{-1}	M_{n2} Nm	P_{n1} kW	R_{n1} N	R_{n2} N	n_2 min^{-1}	M_{n2} Nm	P_{n1} kW	R_{n1} N	R_{n2} N	
C 12 2_2.8	2.8	325	43	1.5	1140	910	181	53	1.1	1300	1080	
C 12 2_3.2	3.2	281	46	1.4	1100	910	156	57	1.0	1300	1080	
C 12 2_3.7	3.7	246	49	1.3	1090	920	137	60	0.91	1300	1100	
C 12 2_4.3	4.3	209	52	1.2	1050	920	116	64	0.82	1280	1100	
C 12 2_4.9	4.9	185	55	1.1	1050	960	103	67	0.76	1280	1160	
C 12 2_5.6	5.6	161	58	1.0	1000	980	89	69	0.68	1300	1280	
C 12 2_6.2	6.2	144	61	1.0	960	980	80	70	0.62	1300	1390	
C 12 2_7.6	7.6	118	65	0.85	1300	1780	66	79	0.57	1300	2000	
C 12 2_8.8	8.8	102	69	0.77	1300	1830	57	84	0.52	1300	2000	
C 12 2_10.1	10.1	89	72	0.71	1300	1950	50	88	0.48	1300	2000	
C 12 2_11.9	11.9	76	77	0.64	1300	2000	42	89	0.41	1300	2000	
C 12 2_13.4	13.4	67	81	0.60	1300	2000	37	90	0.37	1300	2000	
C 12 2_15.4	15.4	58	85	0.55	1300	2000	32	89	0.32	1300	2000	125
C 12 2_17.2	17.2	52	88	0.51	1300	2000	29.1	90	0.29	1300	2000	
C 12 2_18.4	18.4	49	88	0.47	1300	2000	27.2	89	0.27	1300	2000	
C 12 2_20.6	20.6	44	89	0.43	1300	2000	24.2	89	0.24	1300	2000	
C 12 2_23.2	23.2	39	89	0.38	1300	2000	21.5	89	0.21	1300	2000	
C 12 2_25.4	25.4	35	89	0.35	1300	2000	19.7	89	0.19	1300	2000	
C 12 2_29.5	29.5	31	100	0.34	1300	2000	16.9	100	0.19	1300	2000	
C 12 2_32.8	32.8	27.5	90	0.27	1300	2000	15.3	90	0.15	1300	2000	
C 12 2_37.0	37.0	24.3	90	0.24	1300	2000	13.5	90	0.13	1300	2000	
C 12 2_42.3	42.3	21.3	100	0.23	1300	2000	11.8	100	0.13	1300	2000	
C 12 2_47.6	47.6	18.9	90	0.19	1300	2000	10.5	90	0.10	1300	2000	
C 12 2_55.2	55.2	16.3	90	0.16	1300	2000	9.1	90	0.09	1300	2000	
C 12 2_66.2	66.2	13.6	90	0.13	1300	2000	7.6	90	0.07	1300	2000	

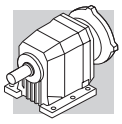

C 22 — 200 Nm

	i	n_1 = 2800 min^{-1}					n_1 = 1400 min^{-1}					
		n_2 min^{-1}	M_{n2} Nm	P_{n1} kW	R_{n1} N	R_{n2} N	n_2 min^{-1}	M_{n2} Nm	P_{n1} kW	R_{n1} N	R_{n2} N	
C 22 2_2.7	2.7	1029	65	7.4	—	1150	514	80	4.5	—	1460	
C 22 2_3.3	3.3	842	68	6.3	—	1230	421	85	3.9	—	1560	
C 22 2_3.7	3.7	755	70	5.8	—	1290	378	90	3.7	—	1610	
C 22 2_4.3	4.3	658	75	5.4	—	1320	329	94	3.4	—	1650	
C 22 2_4.8	4.8	587	80	5.2	—	1370	294	100	3.2	—	1730	
C 22 2_5.6	5.6	501	82	4.5	—	1410	250	102	2.8	—	1790	
C 22 2_6.1	6.1	460	85	4.3	—	1500	230	105	2.7	—	1900	
C 22 2_7.1	7.1	395	105	4.6	1090	1570	198	130	2.8	1420	1990	
C 22 2_8.7	8.7	324	110	3.9	1130	1680	162	138	2.5	1430	2090	
C 22 2_9.6	9.6	290	115	3.7	1160	1750	145	145	2.3	1460	2200	
C 22 2_11.1	11.1	253	120	3.3	1130	1820	126	153	2.1	1390	2270	
C 22 2_12.4	12.4	226	125	3.1	1160	1900	113	160	2.0	1420	2380	
C 22 2_14.5	14.5	193	133	2.8	1090	1980	96	168	1.8	1360	2450	
C 22 2_15.8	15.8	177	140	2.7	1030	2030	88	175	1.7	1320	2570	
C 22 2_18.1	18.1	154	145	2.5	1000	2140	77	183	1.6	1250	2650	
C 22 2_20.0	20.0	140	150	2.3	1000	2210	70	190	1.5	1250	2770	
C 22 2_21.5	21.5	131	153	2.2	970	2250	65	194	1.4	1190	2820	
C 22 2_24.3	24.3	115	160	2.0	980	2350	58	200	1.3	1250	2970	
C 22 2_27.2	27.2	103	166	1.9	960	2420	52	200	1.1	1340	3110	
C 22 2_29.6	29.6	95	175	1.8	850	2490	47	200	1.0	1350	3270	
C 22 2_33.1	33.1	85	178	1.7	840	2590	42	200	0.93	1390	3400	129
C 22 2_36.8	36.8	76	185	1.6	750	2690	38	200	0.84	1400	3610	
C 22 2_43.3	43.3	65	185	1.3	830	2910	32	190	0.68	1610	3950	
C 22 2_48.6	48.6	58	150	0.95	1300	3300	28.8	155	0.49	1740	4400	
C 22 2_54.7	54.7	51	150	0.85	1320	3470	25.6	155	0.44	1770	4600	
C 22 2_63.3	63.3	44	125	0.61	1400	3860	22.1	130	0.32	1820	5000	
C 22 3_60.0	60.0	47	180	0.93	840	3400	23.3	190	0.49	1230	4500	
C 22 3_65.3	65.3	43	200	0.94	880	3440	21.4	200	0.47	1270	4670	
C 22 3_74.8	74.8	37	200	0.83	940	3600	18.7	200	0.41	1270	4800	
C 22 3_82.6	82.6	34	200	0.75	1010	3820	16.9	200	0.37	1300	5000	
C 22 3_88.5	88.5	32	200	0.70	1040	3900	15.8	200	0.35	1300	5000	
C 22 3_100.2	100.2	28.0	200	0.62	1090	4160	14.0	200	0.31	1300	5000	
C 22 3_112.0	112.0	25.0	200	0.55	1130	4300	12.5	200	0.28	1300	5000	
C 22 3_122.2	122.2	22.9	200	0.51	1160	4540	11.5	200	0.25	1300	5000	
C 22 3_136.5	136.5	20.5	200	0.45	1180	4700	10.3	200	0.23	1300	5000	
C 22 3_151.7	151.7	18.5	200	0.41	1220	4980	9.2	200	0.20	1300	5000	
C 22 3_178.5	178.5	15.7	200	0.35	1260	5000	7.8	200	0.17	1300	5000	
C 22 3_200.7	200.7	14.0	190	0.29	1280	5000	7.0	190	0.15	1300	5000	
C 22 3_225.8	225.8	12.4	180	0.25	1300	5000	6.2	185	0.13	1300	5000	
C 22 3_261.0	261.0	10.7	145	0.17	1300	5000	5.4	155	0.09	1300	5000	

(—) Nehmen Sie bitte Kontakt mit unserem Applikationsdienst auf und geben die Querkraftsdaten an (Drehrichtung, Orientierung, Anordnung)

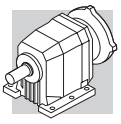

C 22 — 200 Nm

	i	n_1 = 900 min^{-1}					n_1 = 500 min^{-1}					
		n_2 min^{-1}	M_{n2} Nm	P_{n1} kW	R_{n1} N	R_{n2} N	n_2 min^{-1}	M_{n2} Nm	P_{n1} kW	R_{n1} N	R_{n2} N	
C 22 2_2.7	2.7	331	95	3.5	—	1670	184	100	2.0	400	2150	
C 22 2_3.3	3.3	271	100	3.0	—	1760	150	103	1.7	570	2300	
C 22 2_3.7	3.7	243	105	2.8	—	1850	135	105	1.6	800	2430	
C 22 2_4.3	4.3	211	105	2.4	—	1980	117	105	1.4	940	2550	
C 22 2_4.8	4.8	189	105	2.2	170	2090	105	105	1.2	1200	2710	
C 22 2_5.6	5.6	161	105	1.9	200	2250	89	112	1.1	1020	2850	
C 22 2_6.1	6.1	148	110	1.8	200	2290	82	116	1.1	980	2930	
C 22 2_7.1	7.1	127	150	2.1	1650	2310	71	180	1.4	2060	2820	
C 22 2_8.7	8.7	104	160	1.8	1650	2440	58	190	1.2	2100	3000	
C 22 2_9.6	9.6	93	170	1.7	1650	2530	52	200	1.1	2130	3130	
C 22 2_11.1	11.1	81	176	1.6	1640	2650	45	200	0.99	2170	3270	
C 22 2_12.4	12.4	73	185	1.5	1650	2760	40	200	0.89	2200	3520	
C 22 2_14.5	14.5	62	193	1.3	1610	2850	34	200	0.76	2200	3670	
C 22 2_15.8	15.8	57	200	1.3	1580	2990	32	200	0.70	2200	3920	
C 22 2_18.1	18.1	50	200	1.1	1650	3150	27.6	200	0.61	2200	4200	
C 22 2_20.0	20.0	45	200	0.99	1750	3340	25.0	200	0.55	2200	4350	
C 22 2_21.5	21.5	42	200	0.92	1760	3450	23.3	200	0.51	2200	4550	
C 22 2_24.3	24.3	37	200	0.82	1900	3650	20.6	200	0.45	2200	4720	
C 22 2_27.2	27.2	33	200	0.73	1950	3820	18.4	200	0.41	2200	5000	
C 22 2_29.6	29.6	30	200	0.67	1980	3990	16.9	200	0.37	2200	5000	
C 22 2_33.1	33.1	27.2	200	0.60	1970	4200	15.1	200	0.33	2200	5000	129
C 22 2_36.8	36.8	24.5	200	0.54	1990	4390	13.6	200	0.30	2200	5000	
C 22 2_43.3	43.3	20.8	190	0.44	2020	4770	11.6	190	0.24	2200	5000	
C 22 2_48.6	48.6	18.5	160	0.33	2050	5000	10.3	170	0.19	2200	5000	
C 22 2_54.7	54.7	16.4	160	0.29	2090	5000	9.1	170	0.17	2200	5000	
C 22 2_63.3	63.3	14.2	135	0.21	2140	5000	7.9	140	0.12	2200	5000	
C 22 3_60.0	60.0	15.0	190	0.31	1300	5000	8.3	200	0.18	1300	5000	
C 22 3_65.3	65.3	13.8	200	0.31	1300	5000	7.7	200	0.17	1300	5000	
C 22 3_74.8	74.8	12.0	200	0.27	1300	5000	6.7	200	0.15	1300	5000	
C 22 3_82.6	82.6	10.9	200	0.25	1300	5000	6.1	200	0.14	1300	5000	
C 22 3_88.5	88.5	10.2	200	0.22	1300	5000	5.6	200	0.12	1300	5000	
C 22 3_100.2	100.2	9.0	200	0.20	1300	5000	5.0	200	0.11	1300	5000	
C 22 3_112.0	112.0	8.0	200	0.18	1300	5000	4.5	200	0.10	1300	5000	
C 22 3_122.2	122.2	7.4	200	0.17	1300	5000	4.1	200	0.09	1300	5000	
C 22 3_136.5	136.5	6.6	200	0.15	1300	5000	3.7	200	0.08	1300	5000	
C 22 3_151.7	151.7	5.9	200	0.13	1300	5000	3.3	200	0.07	1300	5000	
C 22 3_178.5	178.5	5.0	200	0.11	1300	5000	2.8	200	0.06	1300	5000	
C 22 3_200.7	200.7	4.5	195	0.10	1300	5000	2.5	200	0.05	1300	5000	
C 22 3_225.8	225.8	4.0	195	0.09	1300	5000	2.2	200	0.05	1300	5000	
C 22 3_261.0	261.0	3.4	160	0.06	1300	5000	1.9	165	0.04	1300	5000	

(—) Nehmen Sie bitte Kontakt mit unserem Applikationsdienst auf und geben die Querkraftsdaten an (Drehrichtung, Orientierung, Anordnung)

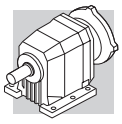

C 32 — 300 Nm

	i	n_1 = 2800 min^{-1}					n_1 = 1400 min^{-1}					
		n_2 min^{-1}	M_{n2} Nm	P_{n1} kW	R_{n1} N	R_{n2} N	n_2 min^{-1}	M_{n2} Nm	P_{n1} kW	R_{n1} N	R_{n2} N	
C 32 2_2.9	2.9	973	105	11.3	670	1710	486	130	7.0	940	2170	
C 32 2_3.4	3.4	821	116	10.5	480	1770	411	138	6.2	900	2280	
C 32 2_3.7	3.7	750	120	9.9	560	1830	375	150	6.2	750	2310	
C 32 2_4.5	4.5	622	129	8.8	450	1930	311	152	5.2	970	2500	
C 32 2_5.0	5.0	565	135	8.4	470	1990	283	155	4.8	1100	2600	
C 32 2_5.7	5.7	495	141	7.7	380	2080	248	155	4.2	1250	2760	
C 32 2_6.3	6.3	447	150	7.4	300	2130	223	155	3.8	1450	2890	
C 32 2_7.2	7.2	391	160	6.9	1890	2370	195	200	4.3	2200	2990	
C 32 2_8.5	8.5	330	168	6.1	1900	2510	165	209	3.8	2200	3180	
C 32 2_9.3	9.3	301	175	5.8	1910	2580	151	220	3.7	2200	3260	
C 32 2_11.2	11.2	250	187	5.2	1910	2740	125	231	3.2	2200	3480	
C 32 2_12.3	12.3	227	195	4.9	1910	2820	114	245	3.1	2200	3560	
C 32 2_14.1	14.1	199	205	4.5	1900	2940	99	251	2.8	2200	3750	
C 32 2_15.6	15.6	180	215	4.3	1900	3030	90	270	2.7	2200	3820	
C 32 2_18.2	18.2	154	223	3.8	1900	3210	77	275	2.3	2200	4070	
C 32 2_20.1	20.1	139	235	3.6	1900	3290	70	295	2.3	2200	4160	
C 32 2_22.9	22.9	122	240	3.2	1880	3470	61	295	2.0	2200	4400	
C 32 2_25.1	25.1	111	250	3.1	1890	3560	56	300	1.8	2200	4570	
C 32 2_26.9	26.9	104	255	2.9	1880	3650	52	300	1.7	2200	4700	
C 32 2_29.8	29.8	94	265	2.7	1880	3770	47	300	1.6	2200	4920	
C 32 2_33.1	33.1	85	270	2.5	1880	3920	42	300	1.4	2200	5150	133
C 32 2_36.1	36.1	78	280	2.4	1870	4030	39	300	1.3	2200	5350	
C 32 2_40.7	40.7	69	290	2.2	1860	4200	34	300	1.1	2200	5500	
C 32 2_45.3	45.3	62	300	2.0	1860	4360	31	300	1.0	2200	5500	
C 32 2_52.4	52.4	53	300	1.8	1860	4650	26.7	300	0.88	2200	5500	
C 32 2_59.4	59.4	47	205	1.1	2020	5000	23.6	215	0.56	2200	5500	
C 32 2_66.8	66.8	42	205	0.95	2020	5500	21.0	215	0.50	2200	5500	
C 32 3_74.7	74.7	37	280	1.2	750	5500	18.7	290	0.60	1170	5500	
C 32 3_82.6	82.6	34	300	1.1	820	5500	17.0	300	0.56	1240	5500	
C 32 3_94.2	94.2	29.7	300	0.98	900	5500	14.9	300	0.49	1270	5500	
C 32 3_103.3	103.3	27.1	300	0.90	980	5500	13.6	300	0.45	1300	5500	
C 32 3_110.6	110.6	25.3	300	0.84	1000	5500	12.7	300	0.42	1300	5500	
C 32 3_122.4	122.4	22.9	300	0.76	1060	5500	11.4	300	0.38	1300	5500	
C 32 3_136.0	136.0	20.6	300	0.68	1110	5500	10.3	300	0.34	1300	5500	
C 32 3_148.4	148.4	18.9	300	0.62	1130	5500	9.4	300	0.31	1300	5500	
C 32 3_167.4	167.4	16.7	300	0.55	1180	5500	8.4	300	0.28	1300	5500	
C 32 3_186.0	186.0	15.1	300	0.50	1200	5500	7.5	300	0.25	1300	5500	
C 32 3_215.6	215.6	13.0	300	0.43	1240	5500	6.5	300	0.21	1300	5500	
C 32 3_244.2	244.2	11.5	240	0.30	1280	5500	5.7	255	0.16	1300	5500	
C 32 3_274.7	274.7	10.2	240	0.27	1300	5500	5.1	255	0.14	1300	5500	

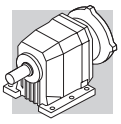

C 32 — 300 Nm

	i	n_1 = 900 min^{-1}					n_1 = 500 min^{-1}					
		n_2 min^{-1}	M_{n2} Nm	P_{n1} kW	R_{n1} N	R_{n2} N	n_2 min^{-1}	M_{n2} Nm	P_{n1} kW	R_{n1} N	R_{n2} N	
C 32 2_2.9	2.9	313	150	5.2	1120	2510	174	155	3.0	2200	3220	
C 32 2_3.4	3.4	264	152	4.4	1390	2690	147	167	2.7	2200	3390	
C 32 2_3.7	3.7	241	155	4.1	1570	2790	134	175	2.6	2200	3480	
C 32 2_4.5	4.5	200	158	3.5	1750	3010	111	188	2.3	2200	3690	
C 32 2_5.0	5.0	182	162	3.2	1870	3120	101	198	2.2	2200	3790	
C 32 2_5.7	5.7	159	171	3.0	1730	3250	88	198	1.9	2200	4010	
C 32 2_6.3	6.3	144	178	2.8	1730	3350	80	200	1.8	2200	4180	
C 32 2_7.2	7.2	126	235	3.3	2200	3450	70	285	2.2	2200	4200	
C 32 2_8.5	8.5	106	246	2.9	2200	3660	59	288	1.9	2200	4520	
C 32 2_9.3	9.3	97	260	2.8	2200	3750	54	300	1.8	2200	4640	
C 32 2_11.2	11.2	80	272	2.4	2200	4010	45	300	1.5	2200	5030	
C 32 2_12.3	12.3	73	285	2.3	2200	4120	41	300	1.3	2200	5250	
C 32 2_14.1	14.1	64	290	2.0	2200	4340	36	300	1.2	2200	5500	
C 32 2_15.6	15.6	58	300	1.9	2200	4500	32	300	1.1	2200	5500	
C 32 2_18.2	18.2	50	300	1.6	2200	4810	27.5	300	0.91	2200	5500	
C 32 2_20.1	20.1	45	300	1.5	2200	5030	24.9	300	0.82	2200	5500	
C 32 2_22.9	22.9	39	300	1.3	2200	5300	21.8	300	0.72	2200	5500	
C 32 2_25.1	25.1	36	300	1.2	2200	5500	19.9	300	0.66	2200	5500	
C 32 2_26.9	26.9	33	300	1.1	2200	5500	18.6	300	0.61	2200	5500	
C 32 2_29.8	29.8	30	300	1.0	2200	5500	16.8	300	0.56	2200	5500	
C 32 2_33.1	33.1	27.2	300	0.90	2200	5500	15.1	300	0.50	2200	5500	133
C 32 2_36.1	36.1	24.9	300	0.82	2200	5500	13.9	300	0.46	2200	5500	
C 32 2_40.7	40.7	22.1	300	0.73	2200	5500	12.3	300	0.41	2200	5500	
C 32 2_45.3	45.3	19.9	300	0.66	2200	5500	11.0	300	0.37	2200	5500	
C 32 2_52.4	52.4	17.2	300	0.57	2200	5500	9.5	300	0.32	2200	5500	
C 32 2_59.4	59.4	15.2	220	0.37	2200	5500	8.4	230	0.21	2200	5500	
C 32 2_66.8	66.8	13.5	220	0.33	2200	5500	7.5	230	0.19	2200	5500	
C 32 3_74.7	74.7	12.0	290	0.38	1300	5500	6.7	300	0.22	1300	5500	
C 32 3_82.6	82.6	10.9	300	0.36	1300	5500	6.1	300	0.20	1300	5500	
C 32 3_94.2	94.2	9.6	300	0.32	1300	5500	5.3	300	0.18	1300	5500	
C 32 3_103.3	103.3	8.7	300	0.29	1300	5500	4.8	300	0.16	1300	5500	
C 32 3_110.6	110.6	8.1	300	0.27	1300	5500	4.5	300	0.15	1300	5500	
C 32 3_122.4	122.4	7.4	300	0.24	1300	5500	4.1	300	0.14	1300	5500	
C 32 3_136.0	136.0	6.6	300	0.22	1300	5500	3.7	300	0.12	1300	5500	
C 32 3_148.4	148.4	6.1	300	0.20	1300	5500	3.4	300	0.11	1300	5500	
C 32 3_167.4	167.4	5.4	300	0.18	1300	5500	3.0	300	0.10	1300	5500	
C 32 3_186.0	186.0	4.8	300	0.16	1300	5500	2.7	300	0.09	1300	5500	
C 32 3_215.6	215.6	4.2	300	0.14	1300	5500	2.3	300	0.08	1300	5500	
C 32 3_244.2	244.2	3.7	260	0.11	1300	5500	2.0	275	0.06	1300	5500	
C 32 3_274.7	274.7	3.3	260	0.09	1300	5500	1.8	275	0.06	1300	5500	

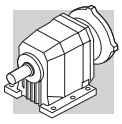

C 36 — 450 Nm

	i	n_1 = 2800 min^{-1}					n_1 = 1400 min^{-1}					
		n_2 min^{-1}	M_{n2} Nm	P_{n1} kW	R_{n1} N	R_{n2} N	n_2 min^{-1}	M_{n2} Nm	P_{n1} kW	R_{n1} N	R_{n2} N	
C 36 2_2.7	2.7	1042	140	16.1	670	1750	521	170	9.8	1150	2240	
C 36 2_3.2	3.2	880	145	14.1	790	1870	440	177	8.6	1240	2380	
C 36 2_3.5	3.5	803	150	13.3	910	1920	402	185	8.2	1320	2440	
C 36 2_4.2	4.2	667	157	11.5	920	2050	333	192	7.1	1410	2620	
C 36 2_4.6	4.6	606	165	11.0	920	2110	303	200	6.7	1470	2700	
C 36 2_5.3	5.3	530	167	9.8	990	2230	265	200	5.8	1650	2870	
C 36 2_5.8	5.8	479	170	9.0	1160	2330	239	200	5.3	1990	3020	
C 36 2_6.8	6.8	413	285	13.0	1750	2130	206	355	8.1	2220	2710	
C 36 2_8.0	8.0	349	297	11.4	1770	2270	174	365	7.0	2250	2910	
C 36 2_8.8	8.8	318	310	10.9	1780	2330	159	380	6.7	2270	3000	
C 36 2_10.6	10.6	264	325	9.5	1790	2500	132	380	5.5	2320	3290	
C 36 2_11.7	11.7	240	340	9.0	1790	2560	120	380	5.0	2370	3460	
C 36 2_13.3	13.3	210	350	8.1	1800	2700	105	380	4.4	2400	3670	
C 36 2_14.8	14.8	190	360	7.5	1800	2810	95	380	4.0	2440	3890	
C 36 2_17.2	17.2	163	370	6.6	1810	3000	81	380	3.4	2460	4200	
C 36 2_19.0	19.0	147	380	6.2	1820	3110	74	380	3.1	2500	4400	
C 36 3_22.1	22.1	127	340	4.7	2300	3570	63	430	3.0	2900	4490	
C 36 3_26.2	26.2	107	355	4.2	2300	3790	53	440	2.6	2910	4810	
C 36 3_28.7	28.7	98	385	4.1	2300	3820	49	450	2.4	2930	4980	
C 36 3_34.6	34.6	81	400	3.6	2300	4100	40	450	2.0	2950	5420	
C 36 3_38.1	38.1	74	435	3.5	2300	4140	37	450	1.8	2970	5690	
C 36 3_43.5	43.5	64	440	3.1	2300	4450	32	450	1.6	2980	6050	
C 36 3_48.2	48.2	58	450	2.9	2310	4580	29.1	450	1.4	2990	6330	
C 36 3_56.2	56.2	50	450	2.5	2320	4970	24.9	450	1.2	2990	6500	
C 36 3_62.0	62.0	45	450	2.2	2330	5170	22.6	450	1.1	3000	6500	137
C 36 3_70.8	70.8	40	450	2.0	2340	5520	19.8	450	0.98	3000	6500	
C 36 3_77.6	77.6	36	450	1.8	2350	5740	18.0	450	0.90	3000	6500	
C 36 3_83.1	83.1	34	450	1.7	2350	5930	16.8	450	0.84	3000	6500	
C 36 3_91.9	91.9	30	450	1.5	2360	6200	15.2	450	0.76	3000	6500	
C 36 3_102.2	102.2	27.4	450	1.4	2360	6400	13.7	450	0.68	3000	6500	
C 36 3_111.5	111.5	25.1	450	1.2	2360	6500	12.6	450	0.62	3000	6500	
C 36 3_125.8	125.8	22.3	450	1.1	2370	6500	11.1	450	0.55	3000	6500	
C 36 3_139.8	139.8	20.0	450	0.99	2370	6500	10.0	450	0.50	3000	6500	
C 36 3_162.0	162.0	17.3	450	0.86	2380	6500	8.6	450	0.43	3000	6500	
C 36 3_183.5	183.5	15.3	450	0.76	2380	6500	7.6	450	0.38	3000	6500	
C 36 3_206.4	206.4	13.6	450	0.67	2380	6500	6.8	450	0.34	3000	6500	
C 36 4_230.9	230.9	12.1	450	0.60	1150	6500	6.1	450	0.30	1300	6500	
C 36 4_255.0	255.0	11.0	450	0.54	1190	6500	5.5	450	0.27	1300	6500	
C 36 4_290.9	290.9	9.6	450	0.48	1210	6500	4.8	450	0.24	1300	6500	
C 36 4_318.9	318.9	8.8	450	0.44	1230	6500	4.4	450	0.22	1300	6500	
C 36 4_341.7	341.7	8.2	450	0.41	1240	6500	4.1	450	0.20	1300	6500	
C 36 4_377.9	377.9	7.4	450	0.37	1260	6500	3.7	450	0.18	1300	6500	
C 36 4_420.2	420.2	6.7	450	0.33	1270	6500	3.3	450	0.17	1300	6500	
C 36 4_458.4	458.4	6.1	450	0.30	1280	6500	3.1	450	0.15	1300	6500	
C 36 4_517.2	517.2	5.4	450	0.27	1300	6500	2.7	450	0.13	1300	6500	
C 36 4_574.7	574.7	4.9	450	0.24	1300	6500	2.4	450	0.12	1300	6500	
C 36 4_665.9	665.9	4.2	450	0.21	1300	6500	2.1	450	0.10	1300	6500	
C 36 4_754.2	754.2	3.7	450	0.18	1300	6500	1.9	450	0.09	1300	6500	
C 36 4_848.5	848.5	3.3	450	0.16	1300	6500	1.6	450	0.08	1300	6500	

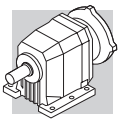

C 36 — 450 Nm

	i	n_1 = 900 min^{-1}					n_1 = 500 min^{-1}					
		n_2 min^{-1}	M_{n2} Nm	P_{n1} kW	R_{n1} N	R_{n2} N	n_2 min^{-1}	M_{n2} Nm	P_{n1} kW	R_{n1} N	R_{n2} N	
C 36 2_2.7	2.7	335	190	7.0	1670	2640	186	200	4.1	3000	3390	
C 36 2_3.2	3.2	283	190	5.9	2080	2790	157	200	3.5	3000	3650	
C 36 2_3.5	3.5	258	200	5.7	2160	2920	143	200	3.2	3000	3810	
C 36 2_4.2	4.2	214	200	4.7	2410	3170	119	200	2.6	3000	4100	
C 36 2_4.6	4.6	195	200	4.3	2590	3320	108	200	2.4	3000	4300	
C 36 2_5.3	5.3	171	200	3.8	2630	3500	95	200	2.1	3000	4520	
C 36 2_5.8	5.8	154	200	3.4	2680	3690	86	200	1.9	3000	4740	
C 36 2_6.8	6.8	133	380	5.6	2660	3290	74	380	3.1	3000	4400	
C 36 2_8.0	8.0	112	380	4.7	2720	3580	62	380	2.6	3000	4750	
C 36 2_8.8	8.8	102	380	4.3	2790	3750	57	380	2.4	3000	4960	
C 36 2_10.6	10.6	85	380	3.6	2850	4110	47	380	2.0	3000	5360	
C 36 2_11.7	11.7	77	380	3.2	2900	4300	43	380	1.8	3000	5630	
C 36 2_13.3	13.3	68	380	2.8	2930	4590	38	380	1.6	3000	5930	
C 36 2_14.8	14.8	61	380	2.6	2970	4800	34	380	1.4	3000	6240	
C 36 2_17.2	17.2	52	380	2.2	2980	5100	29.1	380	1.2	3000	6330	
C 36 2_19.0	19.0	47	380	2.0	3000	5390	26.3	380	1.1	3000	6500	
C 36 3_22.1	22.1	41	450	2.0	3000	5430	22.6	450	1.1	3000	6500	
C 36 3_26.2	26.2	34	450	1.7	3000	5850	19.1	450	0.95	3000	6500	
C 36 3_28.7	28.7	31	450	1.6	3000	6120	17.4	450	0.86	3000	6500	
C 36 3_34.6	34.6	26.0	450	1.3	3000	6500	14.5	450	0.72	3000	6500	
C 36 3_38.1	38.1	23.6	450	1.2	3000	6500	13.1	450	0.65	3000	6500	
C 36 3_43.5	43.5	20.7	450	1.0	3000	6500	11.5	450	0.57	3000	6500	
C 36 3_48.2	48.2	18.7	450	0.93	3000	6500	10.4	450	0.52	3000	6500	
C 36 3_56.2	56.2	16.0	450	0.79	3000	6500	8.9	450	0.44	3000	6500	
C 36 3_62.0	62.0	14.5	450	0.72	3000	6500	8.1	450	0.40	3000	6500	137
C 36 3_70.8	70.8	12.7	450	0.63	3000	6500	7.1	450	0.35	3000	6500	
C 36 3_77.6	77.6	11.6	450	0.58	3000	6500	6.4	450	0.32	3000	6500	
C 36 3_83.1	83.1	10.8	450	0.54	3000	6500	6.0	450	0.30	3000	6500	
C 36 3_91.9	91.9	9.8	450	0.49	3000	6500	5.4	450	0.27	3000	6500	
C 36 3_102.2	102.2	8.8	450	0.44	3000	6500	4.9	450	0.24	3000	6500	
C 36 3_111.5	111.5	8.1	450	0.40	3000	6500	4.5	450	0.22	3000	6500	
C 36 3_125.8	125.8	7.2	450	0.35	3000	6500	4.0	450	0.20	3000	6500	
C 36 3_139.8	139.8	6.4	450	0.32	3000	6500	3.6	450	0.18	3000	6500	
C 36 3_162.0	162.0	5.6	450	0.28	3000	6500	3.1	450	0.15	3000	6500	
C 36 3_183.5	183.5	4.9	450	0.24	3000	6500	2.7	450	0.14	3000	6500	
C 36 3_206.4	206.4	4.4	450	0.22	3000	6500	2.4	450	0.12	3000	6500	
C 36 4_230.9	230.9	3.9	450	0.19	1300	6500	2.2	450	0.11	1300	6500	
C 36 4_255.0	255.0	3.5	450	0.18	1300	6500	2.0	450	0.10	1300	6500	
C 36 4_290.9	290.9	3.1	450	0.15	1300	6500	1.7	450	0.09	1300	6500	
C 36 4_318.9	318.9	2.8	450	0.14	1300	6500	1.6	450	0.08	1300	6500	
C 36 4_341.7	341.7	2.6	450	0.13	1300	6500	1.5	450	0.07	1300	6500	
C 36 4_377.9	377.9	2.4	450	0.12	1300	6500	1.3	450	0.07	1300	6500	
C 36 4_420.2	420.2	2.1	450	0.11	1300	6500	1.2	450	0.06	1300	6500	
C 36 4_458.4	458.4	2.0	450	0.10	1300	6500	1.1	450	0.05	1300	6500	
C 36 4_517.2	517.2	1.7	450	0.09	1300	6500	1.0	450	0.05	1300	6500	
C 36 4_574.7	574.7	1.6	450	0.08	1300	6500	0.9	450	0.04	1300	6500	
C 36 4_665.9	665.9	1.4	450	0.07	1300	6500	0.8	450	0.04	1300	6500	
C 36 4_754.2	754.2	1.2	450	0.06	1300	6500	0.7	450	0.03	1300	6500	
C 36 4_848.5	848.5	1.1	450	0.05	1300	6500	0.6	450	0.03	1300	6500	

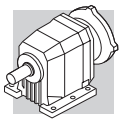

C 41 — 600 Nm

	i	n_1 = 2800 min^{-1}					n_1 = 1400 min^{-1}					
		n_2 min^{-1}	M_{n2} Nm	P_{n1} kW	R_{n1} N	R_{n2} N	n_2 min^{-1}	M_{n2} Nm	P_{n1} kW	R_{n1} N	R_{n2} N	
C 41 2_2.7	2.7	1037	245	28	980	1290	519	245	14.0	1390	2060	
C 41 2_3.6	3.6	778	255	22	1070	1540	389	255	10.9	1650	2390	
C 41 2_4.7	4.7	596	260	17.1	1170	1800	298	260	8.5	2010	2730	
C 41 2_6.0	6.0	467	260	13.4	1290	2100	233	260	6.7	2400	3110	
C 41 2_6.4	6.4	438	275	13.3	2270	2590	219	345	8.3	2860	3260	
C 41 2_7.1	7.1	394	285	12.4	2360	2700	197	355	7.7	2980	3420	
C 41 2_8.6	8.6	326	305	10.9	2300	2860	163	385	6.9	2900	3600	
C 41 2_9.6	9.6	292	310	10.0	2410	3010	146	390	6.3	3030	3800	
C 41 2_11.2	11.2	250	335	9.2	2310	3100	125	420	5.8	2910	3920	
C 41 2_12.4	12.4	226	340	8.5	2440	3270	113	425	5.3	3070	4140	
C 41 2_14.2	14.2	197	355	7.7	2330	3410	99	445	4.8	2980	4300	
C 41 2_15.8	15.8	177	360	7.0	2460	3590	89	450	4.4	3120	4540	
C 41 2_17.8	17.8	157	380	6.6	2330	3680	79	480	4.2	3050	4630	
C 41 2_19.8	19.8	141	385	6.0	2460	3880	71	485	3.8	3180	4890	
C 41 2_22.6	22.6	124	410	5.6	2320	3990	62	500	3.4	3110	5110	
C 41 2_25.0	25.0	112	415	5.1	2460	4210	56	500	3.1	3230	5420	
C 41 2_28.3	28.3	99	445	4.9	2310	4290	49	500	2.7	3180	5710	
C 41 2_31.4	31.4	89	445	4.4	2440	4550	45	500	2.5	3300	6040	
C 41 2_33.4	33.4	84	465	4.3	2390	4560	42	500	2.3	3220	6170	
C 41 2_37.1	37.1	75	470	3.9	2440	4810	38	500	2.1	3320	6520	
C 41 2_44.8	44.8	63	500	3.4	2660	5130	31	500	1.7	3500	7000	
C 41 3_28.5	28.5	98	445	4.9	3060	4300	49	560	3.1	3500	5420	
C 41 3_31.2	31.2	90	450	4.5	3090	4510	45	570	2.9	3500	5670	
C 41 3_36.8	36.8	76	480	4.1	3070	4710	38	600	2.6	3500	5960	
C 41 3_40.3	40.3	69	485	3.8	3100	4940	35	600	2.3	3500	6280	
C 41 3_47.0	47.0	60	515	3.5	3070	5140	29.8	600	2.0	3500	6720	
C 41 3_51.5	51.5	54	525	3.2	3090	5360	27.2	600	1.8	3500	7000	
C 41 3_58.7	58.7	48	550	3.0	3070	5550	23.9	600	1.6	3500	7000	141
C 41 3_64.3	64.3	44	560	2.7	3090	5800	21.8	600	1.5	3500	7000	
C 41 3_74.4	74.4	38	590	2.5	3060	6040	18.8	600	1.3	3500	7000	
C 41 3_81.5	81.5	34	600	2.3	3090	6310	17.2	600	1.2	3500	7000	
C 41 3_93.3	93.3	30	600	2.0	3080	6700	15.0	600	1.0	3500	7000	
C 41 3_102.3	102.3	27.4	600	1.8	3110	7000	13.7	600	0.92	3500	7000	
C 41 3_110.1	110.1	25.4	600	1.7	3090	7000	12.7	600	0.86	3500	7000	
C 41 3_120.6	120.6	23.2	600	1.6	3110	7000	11.6	600	0.78	3500	7000	
C 41 3_132.9	132.9	21.1	600	1.4	3090	7000	10.5	600	0.71	3500	7000	
C 41 3_145.6	145.6	19.2	600	1.3	3120	7000	9.6	600	0.65	3500	7000	
C 41 3_164.1	164.1	17.1	600	1.2	3100	7000	8.5	600	0.58	3500	7000	
C 41 3_179.9	179.9	15.6	600	1.1	3120	7000	7.8	600	0.53	3500	7000	
C 41 3_190.8	190.8	14.7	600	0.99	3110	7000	7.3	600	0.50	3500	7000	
C 41 3_209.1	209.1	13.4	600	0.90	3130	7000	6.7	600	0.45	3500	7000	
C 41 4_239.9	239.9	11.7	600	0.81	1480	7000	5.8	600	0.40	1910	7000	
C 41 4_263.0	263.0	10.6	600	0.74	1500	7000	5.3	600	0.37	1920	7000	
C 41 4_304.2	304.2	9.2	600	0.64	1520	7000	4.6	600	0.32	1950	7000	
C 41 4_333.4	333.4	8.4	600	0.58	1530	7000	4.2	600	0.29	1960	7000	
C 41 4_381.8	381.8	7.3	600	0.51	1540	7000	3.7	600	0.25	1970	7000	
C 41 4_418.5	418.5	6.7	600	0.46	1550	7000	3.3	600	0.23	1980	7000	
C 41 4_450.2	450.2	6.2	600	0.43	1560	7000	3.1	600	0.21	1990	7000	
C 41 4_493.5	493.5	5.7	600	0.39	1570	7000	2.8	600	0.20	2000	7000	
C 41 4_543.5	543.5	5.2	600	0.36	1570	7000	2.6	600	0.18	2000	7000	
C 41 4_595.8	595.8	4.7	600	0.32	1580	7000	2.3	600	0.16	2010	7000	
C 41 4_671.3	671.3	4.2	600	0.29	1590	7000	2.1	600	0.14	2020	7000	
C 41 4_735.9	735.9	3.8	600	0.26	1590	7000	1.9	600	0.13	2020	7000	
C 41 4_780.4	780.4	3.6	600	0.25	1600	7000	1.8	600	0.12	2030	7000	
C 41 4_855.5	855.5	3.3	600	0.23	1600	7000	1.6	600	0.11	2030	7000	

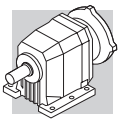

C 41 600 Nm

	i	n_1 = 900 min^{-1}					n_1 = 500 min^{-1}					
		n_2 min^{-1}	M_{n2} Nm	P_{n1} kW	R_{n1} N	R_{n2} N	n_2 min^{-1}	M_{n2} Nm	P_{n1} kW	R_{n1} N	R_{n2} N	
C 41 2_2.7	2.7	333	245	9.0	2560	2650	185	245	5.0	3500	3590	
C 41 2_3.6	3.6	250	255	7.0	2710	3050	139	255	3.9	3500	4090	
C 41 2_4.7	4.7	191	260	5.5	2900	3440	106	260	3.0	3500	4570	
C 41 2_6.0	6.0	150	260	4.3	3080	3890	83	260	2.4	3500	5110	
C 41 2_6.4	6.4	141	400	6.2	3310	3780	78	490	4.2	3500	4580	
C 41 2_7.1	7.1	127	415	5.8	3460	3940	70	500	3.9	3500	4820	
C 41 2_8.6	8.6	105	445	5.1	3360	4180	58	500	3.2	3500	5290	
C 41 2_9.6	9.6	94	450	4.7	3500	4410	52	500	2.9	3500	5600	
C 41 2_11.2	11.2	80	490	4.3	3500	4520	45	500	2.5	3500	5980	
C 41 2_12.4	12.4	73	495	4.0	3500	4780	40	500	2.2	3500	6320	
C 41 2_14.2	14.2	63	500	3.5	3500	5060	35	500	1.9	3500	6700	
C 41 2_15.8	15.8	57	500	3.1	3500	5370	32	500	1.7	3500	7000	
C 41 2_17.8	17.8	51	500	2.8	3500	5650	28.1	500	1.5	3500	7000	
C 41 2_19.8	19.8	45	500	2.5	3500	5970	25.3	500	1.4	3500	7000	
C 41 2_22.6	22.6	40	500	2.2	3500	6320	22.1	500	1.2	3500	7000	
C 41 2_25.0	25.0	36	500	2.0	3500	6670	20.0	500	1.1	3500	7000	
C 41 2_28.3	28.3	32	500	1.8	3500	7000	17.7	500	0.97	3500	7000	
C 41 2_31.4	31.4	28.7	500	1.6	3500	7000	15.9	500	0.88	3500	7000	
C 41 2_33.4	33.4	26.9	500	1.5	3500	7000	15.0	500	0.83	3500	7000	
C 41 2_37.1	37.1	24.3	500	1.3	3500	7000	13.5	500	0.74	3500	7000	
C 41 2_44.8	44.8	20.1	500	1.1	3500	7000	11.2	500	0.62	3500	7000	
C 41 3_28.5	28.5	32	600	2.1	3500	6530	17.5	600	1.2	3500	7000	
C 41 3_31.2	31.2	28.8	600	1.9	3500	6870	16.0	600	1.1	3500	7000	
C 41 3_36.8	36.8	24.5	600	1.7	3500	7000	13.6	600	0.92	3500	7000	
C 41 3_40.3	40.3	22.3	600	1.5	3500	7000	12.4	600	0.84	3500	7000	
C 41 3_47.0	47.0	19.1	600	1.3	3500	7000	10.6	600	0.72	3500	7000	
C 41 3_51.5	51.5	17.5	600	1.2	3500	7000	9.7	600	0.66	3500	7000	
C 41 3_58.7	58.7	15.3	600	1.0	3500	7000	8.5	600	0.58	3500	7000	141
C 41 3_64.3	64.3	14.0	600	0.95	3500	7000	7.8	600	0.53	3500	7000	
C 41 3_74.4	74.4	12.1	600	0.82	3500	7000	6.7	600	0.45	3500	7000	
C 41 3_81.5	81.5	11.0	600	0.75	3500	7000	6.1	600	0.41	3500	7000	
C 41 3_93.3	93.3	9.6	600	0.65	3500	7000	5.4	600	0.36	3500	7000	
C 41 3_102.3	102.3	8.8	600	0.59	3500	7000	4.9	600	0.33	3500	7000	
C 41 3_110.1	110.1	8.2	600	0.55	3500	7000	4.5	600	0.31	3500	7000	
C 41 3_120.6	120.6	7.5	600	0.50	3500	7000	4.1	600	0.28	3500	7000	
C 41 3_132.9	132.9	6.8	600	0.46	3500	7000	3.8	600	0.25	3500	7000	
C 41 3_145.6	145.6	6.2	600	0.42	3500	7000	3.4	600	0.23	3500	7000	
C 41 3_164.1	164.1	5.5	600	0.37	3500	7000	3.0	600	0.21	3500	7000	
C 41 3_179.9	179.9	5.0	600	0.34	3500	7000	2.8	600	0.19	3500	7000	
C 41 3_190.8	190.8	4.7	600	0.32	3500	7000	2.6	600	0.18	3500	7000	
C 41 3_209.1	209.1	4.3	600	0.29	3500	7000	2.4	600	0.16	3500	7000	
C 41 4_239.9	239.9	3.8	600	0.26	2200	7000	2.1	600	0.14	2200	7000	
C 41 4_263.0	263.0	3.4	600	0.24	2200	7000	1.9	600	0.13	2200	7000	
C 41 4_304.2	304.2	3.0	600	0.20	2200	7000	1.6	600	0.11	2200	7000	
C 41 4_333.4	333.4	2.7	600	0.19	2200	7000	1.5	600	0.10	2200	7000	
C 41 4_381.8	381.8	2.4	600	0.16	2200	7000	1.3	600	0.09	2200	7000	
C 41 4_418.5	418.5	2.2	600	0.15	2200	7000	1.2	600	0.08	2200	7000	
C 41 4_450.2	450.2	2.0	600	0.14	2200	7000	1.1	600	0.08	2200	7000	
C 41 4_493.5	493.5	1.8	600	0.13	2200	7000	1.0	600	0.07	2200	7000	
C 41 4_543.5	543.5	1.7	600	0.11	2200	7000	0.92	600	0.06	2200	7000	
C 41 4_595.8	595.8	1.5	600	0.10	2200	7000	0.84	600	0.06	2200	7000	
C 41 4_671.3	671.3	1.3	600	0.09	2200	7000	0.74	600	0.05	2200	7000	
C 41 4_735.9	735.9	1.2	600	0.08	2200	7000	0.68	600	0.05	2200	7000	
C 41 4_780.4	780.4	1.2	600	0.08	2200	7000	0.64	600	0.04	2200	7000	
C 41 4_855.5	855.5	1.1	600	0.07	2200	7000	0.58	600	0.04	2200	7000	

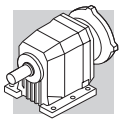

C 51 — 1000 Nm

	i	n_1 = 2800 min^{-1}					n_1 = 1400 min^{-1}					
		n_2 min^{-1}	M_{n2} Nm	P_{n1} kW	R_{n1} N	R_{n2} N	n_2 min^{-1}	M_{n2} Nm	P_{n1} kW	R_{n1} N	R_{n2} N	
C 51 2_2.6	2.6	1077	315	37	980	3340	538	400	24	1390	4200	
C 51 2_3.3	3.3	848	340	32	1070	3610	424	420	19.6	1650	4580	
C 51 2_4.5	4.5	622	370	25	1170	4010	311	435	14.9	2010	5180	
C 51 2_5.6	5.6	500	390	21	1290	4380	250	435	12.0	2400	5760	
C 51 2_7.0	7.0	400	500	22	2270	4760	200	630	13.9	2860	6000	
C 51 2_7.8	7.8	359	510	20	2360	4940	179	640	12.7	2980	6230	
C 51 2_8.8	8.8	318	545	19.1	2300	5120	159	685	12.0	2900	6450	
C 51 2_9.8	9.8	286	545	17.2	2410	5350	143	685	10.8	3030	6750	
C 51 2_11.8	11.8	237	610	16.0	2310	5620	119	770	10.1	2910	7080	
C 51 2_13.1	13.1	214	595	14.0	2440	5930	107	750	8.8	3070	7470	
C 51 2_15.0	15.0	187	660	13.6	2330	6080	93	800	8.2	2980	7770	
C 51 2_16.6	16.6	169	640	11.9	2460	6420	84	795	7.4	3120	8130	
C 51 2_18.9	18.9	148	695	11.3	2330	6630	74	800	6.5	3050	8620	
C 51 2_21.0	21.0	133	675	9.9	2460	7000	67	795	5.8	3180	9020	
C 51 2_23.4	23.4	120	735	9.7	2320	7160	60	800	5.3	3110	9460	
C 51 2_25.9	25.9	108	715	8.5	2460	7550	54	795	4.7	3230	9890	
C 51 2_29.8	29.8	94	795	8.2	2310	7770	47	800	4.1	3180	10000	
C 51 2_33.0	33.0	85	775	7.2	2440	8190	42	795	3.7	3300	10000	
C 51 2_36.4	36.4	77	750	6.4	2390	8660	38	790	3.3	3220	10000	
C 51 2_40.4	40.4	69	795	6.1	2440	8870	35	795	3.0	3320	10000	
C 51 2_43.1	43.1	65	730	5.2	2450	9380	32	770	2.8	3280	10000	
C 51 2_47.8	47.8	59	800	5.2	2460	9530	29.3	800	2.6	3350	10000	
C 51 2_51.4	51.4	54	665	4.0	2550	10000	27.2	700	2.1	3390	10000	
C 51 2_57.0	57.0	49	745	4.0	2540	10000	24.6	785	2.1	3380	10000	
C 51 3_21.8	21.8	128	720	10.4	2870	6940	64	905	6.5	3500	8750	
C 51 3_23.9	23.9	117	730	9.6	2910	7230	59	920	6.1	3500	9110	
C 51 3_27.4	27.4	102	770	8.9	2890	7510	51	970	5.6	3500	9470	
C 51 3_30.1	30.1	93	780	8.2	2930	7830	47	1000	5.2	3500	9810	
C 51 3_37.0	37.0	76	840	7.2	2910	8330	38	1000	4.3	3500	10000	
C 51 3_40.5	40.5	69	855	6.7	2940	8670	35	1000	3.9	3500	10000	145
C 51 3_46.7	46.7	60	905	6.1	2920	9020	30	1000	3.4	3500	10000	
C 51 3_51.2	51.2	55	920	5.7	2950	9390	27.3	1000	3.1	3500	10000	
C 51 3_59.0	59.0	47	970	5.2	2910	9780	23.7	1000	2.7	3500	10000	
C 51 3_64.6	64.6	43	1000	4.9	2940	10000	21.7	1000	2.4	3500	10000	
C 51 3_72.9	72.9	38	1000	4.3	2920	10000	19.2	1000	2.2	3500	10000	
C 51 3_79.9	79.9	35	1000	3.9	2960	10000	17.5	1000	2.0	3500	10000	
C 51 3_93.0	93.0	30	1000	3.4	2950	10000	15.1	1000	1.7	3500	10000	
C 51 3_101.8	101.8	27.5	1000	3.1	2990	10000	13.8	1000	1.5	3500	10000	
C 51 3_113.6	113.6	24.6	1000	2.8	2960	10000	12.3	1000	1.4	3500	10000	
C 51 3_124.4	124.4	22.5	1000	2.5	3000	10000	11.3	1000	1.3	3500	10000	
C 51 3_134.6	134.6	20.8	1000	2.3	2970	10000	10.4	1000	1.2	3500	10000	
C 51 3_147.4	147.4	19.0	1000	2.1	3010	10000	9.5	1000	1.1	3500	10000	
C 51 3_160.5	160.5	17.4	1000	2.0	2980	10000	8.7	1000	0.98	3500	10000	
C 51 3_175.8	175.8	15.9	1000	1.8	3020	10000	8.0	1000	0.90	3500	10000	
C 51 3_197.9	197.9	14.1	1000	1.6	2980	10000	7.1	1000	0.80	3500	10000	
C 51 3_216.7	216.7	12.9	1000	1.5	3020	10000	6.5	1000	0.73	3500	10000	
C 51 4_240.9	240.9	11.6	1000	1.3	2100	10000	5.8	1000	0.67	2200	10000	
C 51 4_263.8	263.8	10.6	1000	1.2	2120	10000	5.3	1000	0.61	2200	10000	
C 51 4_297.8	297.8	9.4	1000	1.1	2140	10000	4.7	1000	0.54	2200	10000	
C 51 4_326.1	326.1	8.6	1000	0.99	2160	10000	4.3	1000	0.49	2200	10000	
C 51 4_379.6	379.6	7.4	1000	0.85	2190	10000	3.7	1000	0.42	2200	10000	
C 51 4_415.7	415.7	6.7	1000	0.78	2200	10000	3.4	1000	0.39	2200	10000	
C 51 4_463.9	463.9	6.0	1000	0.69	2200	10000	3.0	1000	0.35	2200	10000	
C 51 4_508.0	508.0	5.5	1000	0.63	2200	10000	2.8	1000	0.32	2200	10000	
C 51 4_549.7	549.7	5.1	1000	0.59	2200	10000	2.5	1000	0.29	2200	10000	
C 51 4_602.0	602.0	4.7	1000	0.54	2200	10000	2.3	1000	0.27	2200	10000	
C 51 4_655.4	655.4	4.3	1000	0.49	2200	10000	2.1	1000	0.25	2200	10000	
C 51 4_717.7	717.7	3.9	1000	0.45	2200	10000	2.0	1000	0.22	2200	10000	
C 51 4_808.0	808.0	3.5	1000	0.40	2200	10000	1.7	1000	0.20	2200	10000	
C 51 4_884.9	884.9	3.2	1000	0.36	2200	10000	1.6	1000	0.18	2200	10000	

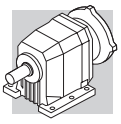

C 51 1000 Nm

	i	n_1 = 900 min^{-1}					n_1 = 500 min^{-1}					
		n_2 min^{-1}	M_{n2} Nm	P_{n1} kW	R_{n1} N	R_{n2} N	n_2 min^{-1}	M_{n2} Nm	P_{n1} kW	R_{n1} N	R_{n2} N	
C 51 2_2.6	2.6	346	400	15.3	2560	5130	192	400	8.5	3500	6620	
C 51 2_3.3	3.3	273	420	12.6	2710	5590	152	420	7.0	3500	7200	
C 51 2_4.5	4.5	200	435	9.6	2900	6300	111	435	5.3	3500	8070	
C 51 2_5.6	5.6	161	435	7.7	3080	6970	89	435	4.3	3500	8880	
C 51 2_7.0	7.0	129	730	10.3	3310	6950	71	800	6.3	3500	8760	
C 51 2_7.8	7.8	115	740	9.4	3460	7220	64	800	5.7	3500	9140	
C 51 2_8.8	8.8	102	795	9.0	3360	7470	57	800	5.0	3500	9680	
C 51 2_9.8	9.8	92	800	8.1	3500	7790	51	800	4.5	3500	10000	
C 51 2_11.8	11.8	76	800	6.7	3500	8530	42	800	3.7	3500	10000	
C 51 2_13.1	13.1	69	800	6.1	3500	8900	38	800	3.4	3500	10000	
C 51 2_15.0	15.0	60	800	5.3	3500	9450	33	800	2.9	3500	10000	
C 51 2_16.6	16.6	54	800	4.8	3500	9850	30	800	2.7	3500	10000	
C 51 2_18.9	18.9	48	800	4.2	3500	10000	26.5	800	2.3	3500	10000	
C 51 2_21.0	21.0	43	800	3.8	3500	10000	23.8	800	2.1	3500	10000	
C 51 2_23.4	23.4	38	800	3.4	3500	10000	21.4	800	1.9	3500	10000	
C 51 2_25.9	25.9	35	800	3.1	3500	10000	19.3	800	1.7	3500	10000	
C 51 2_29.8	29.8	30	800	2.7	3500	10000	16.8	800	1.5	3500	10000	
C 51 2_33.0	33.0	27.3	800	2.4	3500	10000	15.2	800	1.3	3500	10000	
C 51 2_36.4	36.4	24.7	800	2.2	3500	10000	13.7	800	1.2	3500	10000	
C 51 2_40.4	40.4	22.3	800	2.0	3500	10000	12.4	800	1.1	3500	10000	
C 51 2_43.1	43.1	20.9	800	1.8	3500	10000	11.6	800	1.0	3500	10000	
C 51 2_47.8	47.8	18.8	800	1.7	3500	10000	10.5	800	0.92	3500	10000	
C 51 2_51.4	51.4	17.5	725	1.4	3500	10000	9.7	755	0.81	3500	10000	
C 51 2_57.0	57.0	15.8	795	1.4	3500	10000	8.8	795	0.77	3500	10000	
C 51 3_21.8	21.8	41	1000	4.6	3500	10000	22.9	1000	2.6	3500	10000	
C 51 3_23.9	23.9	38	1000	4.2	3500	10000	20.9	1000	2.4	3500	10000	
C 51 3_27.4	27.4	33	1000	3.7	3500	10000	18.2	1000	2.1	3500	10000	
C 51 3_30.1	30.1	29.9	1000	3.4	3500	10000	16.6	1000	1.9	3500	10000	
C 51 3_37.0	37.0	24.3	1000	2.7	3500	10000	13.5	1000	1.5	3500	10000	
C 51 3_40.5	40.5	22.2	1000	2.5	3500	10000	12.3	1000	1.4	3500	10000	145
C 51 3_46.7	46.7	19.3	1000	2.2	3500	10000	10.7	1000	1.2	3500	10000	
C 51 3_51.2	51.2	17.6	1000	2.0	3500	10000	9.8	1000	1.1	3500	10000	
C 51 3_59.0	59.0	15.3	1000	1.7	3500	10000	8.5	1000	0.95	3500	10000	
C 51 3_64.6	64.6	13.9	1000	1.6	3500	10000	7.7	1000	0.87	3500	10000	
C 51 3_72.9	72.9	12.3	1000	1.4	3500	10000	6.9	1000	0.77	3500	10000	
C 51 3_79.9	79.9	11.3	1000	1.3	3500	10000	6.3	1000	0.70	3500	10000	
C 51 3_93.0	93.0	9.7	1000	1.1	3500	10000	5.4	1000	0.61	3500	10000	
C 51 3_101.8	101.8	8.8	1000	1.0	3500	10000	4.9	1000	0.55	3500	10000	
C 51 3_113.6	113.6	7.9	1000	0.89	3500	10000	4.4	1000	0.50	3500	10000	
C 51 3_124.4	124.4	7.2	1000	0.81	3500	10000	4.0	1000	0.45	3500	10000	
C 51 3_134.6	134.6	6.7	1000	0.75	3500	10000	3.7	1000	0.42	3500	10000	
C 51 3_147.4	147.4	6.1	1000	0.69	3500	10000	3.4	1000	0.38	3500	10000	
C 51 3_160.5	160.5	5.6	1000	0.63	3500	10000	3.1	1000	0.35	3500	10000	
C 51 3_175.8	175.8	5.1	1000	0.58	3500	10000	2.8	1000	0.32	3500	10000	
C 51 3_197.9	197.9	4.5	1000	0.51	3500	10000	2.5	1000	0.28	3500	10000	
C 51 3_216.7	216.7	4.2	1000	0.47	3500	10000	2.3	1000	0.26	3500	10000	
C 51 4_240.9	240.9	3.7	1000	0.43	2200	10000	2.1	1000	0.24	2200	10000	
C 51 4_263.8	263.8	3.4	1000	0.39	2200	10000	1.9	1000	0.22	2200	10000	
C 51 4_297.8	297.8	3.0	1000	0.35	2200	10000	1.7	1000	0.19	2200	10000	
C 51 4_326.1	326.1	2.8	1000	0.32	2200	10000	1.5	1000	0.18	2200	10000	
C 51 4_379.6	379.6	2.4	1000	0.27	2200	10000	1.3	1000	0.15	2200	10000	
C 51 4_415.7	415.7	2.2	1000	0.25	2200	10000	1.2	1000	0.14	2200	10000	
C 51 4_463.9	463.9	1.9	1000	0.22	2200	10000	1.1	1000	0.12	2200	10000	
C 51 4_508.0	508.0	1.8	1000	0.20	2200	10000	1.0	1000	0.11	2200	10000	
C 51 4_549.7	549.7	1.6	1000	0.19	2200	10000	0.91	1000	0.10	2200	10000	
C 51 4_602.0	602.0	1.5	1000	0.17	2200	10000	0.83	1000	0.10	2200	10000	
C 51 4_655.4	655.4	1.4	1000	0.16	2200	10000	0.76	1000	0.09	2200	10000	
C 51 4_717.7	717.7	1.3	1000	0.14	2200	10000	0.70	1000	0.08	2200	10000	
C 51 4_808.0	808.0	1.1	1000	0.13	2200	10000	0.62	1000	0.07	2200	10000	
C 51 4_884.9	884.9	1.0	1000	0.12	2200	10000	0.57	1000	0.07	2200	10000	

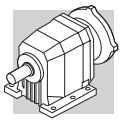

C 61 — 1600 Nm

	i	n_1 = 2800 min^{-1}					n_1 = 1400 min^{-1}					
		n_2 min^{-1}	M_{n2} Nm	P_{n1} kW	R_{n1} N	R_{n2} N	n_2 min^{-1}	M_{n2} Nm	P_{n1} kW	R_{n1} N	R_{n2} N	
C 61 2_2.8	2.8	1000	445	49	—	4670	500	550	30	770	5930	149
C 61 2_3.7	3.7	757	530	44	—	4950	378	575	24	1730	6600	
C 61 2_4.6	4.6	609	575	39	—	5280	304	600	20	2150	7130	
C 61 2_6.0	6.0	467	575	30	—	6000	233	625	16.1	2700	7950	
C 61 2_6.7	6.7	418	900	41	2230	5600	209	1130	26	2850	7060	
C 61 2_7.5	7.5	373	1000	41	2220	5620	187	1250	26	2900	7110	
C 61 2_8.8	8.8	318	1000	35	2290	6080	159	1250	22	2980	7690	
C 61 2_9.8	9.8	286	1100	35	2380	6140	143	1350	21	3330	7850	
C 61 2_10.9	10.9	257	1050	30	2530	6590	128	1350	19.1	2940	8210	
C 61 2_12.1	12.1	231	1150	29	2670	6670	116	1350	17.2	3600	8730	
C 61 2_14.3	14.3	196	1150	25	2450	7220	98	1350	14.6	3590	9430	
C 61 2_15.9	15.9	176	1250	24	2660	7350	88	1350	13.1	3780	9990	
C 61 2_17.7	17.7	158	1200	21	2540	7850	79	1350	11.8	3700	10400	
C 61 2_19.6	19.6	143	1300	20	2780	8000	71	1350	10.6	3890	11000	
C 61 2_22.4	22.4	125	1250	17.2	2630	8650	63	1350	9.3	3810	11600	
C 61 2_24.8	24.8	113	1350	16.8	2840	8840	56	1350	8.4	3980	12300	
C 61 2_27.4	27.4	102	1300	14.6	2600	9390	51	1350	7.6	3880	12800	
C 61 2_30.4	30.4	92	1350	13.7	2900	9770	46	1350	6.9	4050	13500	
C 61 2_34.2	34.2	82	1165	10.5	3020	10900	41	1225	5.5	4090	14500	
C 61 2_38.0	38.0	74	1280	10.4	3030	11100	37	1350	5.5	4100	14800	
C 61 3_26.8	26.8	104	1140	13.4	3740	9810	52	1435	8.4	4700	12400	
C 61 3_29.4	29.4	95	1160	12.4	3780	10200	48	1465	7.9	4700	12900	
C 61 3_33.0	33.0	85	1210	11.6	3750	10600	42	1525	7.3	4700	13300	
C 61 3_36.1	36.1	78	1235	10.8	3800	11000	39	1555	6.8	4700	13800	
C 61 3_43.4	43.4	65	1315	9.6	3760	11600	32	1600	5.8	4700	14800	
C 61 3_47.6	47.6	59	1340	8.9	3810	12100	29.4	1600	5.3	4700	15500	
C 61 3_53.5	53.5	52	1400	8.2	3760	12500	26.2	1600	4.7	4700	16000	
C 61 3_58.6	58.6	48	1430	7.7	3810	13000	23.9	1600	4.3	4700	16000	
C 61 3_67.7	67.7	41	1505	7.0	3750	13500	20.7	1600	3.7	4700	16000	
C 61 3_74.2	74.2	38	1535	6.5	3800	14100	18.9	1600	3.4	4700	16000	
C 61 3_83.0	83.0	34	1600	6.1	3740	14500	16.9	1600	3.0	4700	16000	
C 61 3_91.0	91.0	31	1600	5.5	3800	15200	15.4	1600	2.8	4700	16000	
C 61 3_103.6	103.6	27.0	1600	4.9	3760	16000	13.5	1600	2.4	4700	16000	
C 61 3_113.6	113.6	24.6	1600	4.4	3820	16000	12.3	1600	2.2	4700	16000	
C 61 3_128.1	128.1	21.9	1600	3.9	3790	16000	10.9	1600	2.0	4700	16000	
C 61 3_140.5	140.5	19.9	1600	3.6	3840	16000	10.0	1600	1.8	4700	16000	
C 61 3_150.0	150.0	18.7	1600	3.4	3800	16000	9.3	1600	1.7	4700	16000	
C 61 3_164.5	164.5	17.0	1600	3.1	3850	16000	8.5	1600	1.5	4700	16000	
C 61 3_178.6	178.6	15.7	1600	2.8	3800	16000	7.8	1600	1.4	4700	16000	
C 61 3_195.8	195.8	14.3	1600	2.6	3860	16000	7.2	1600	1.3	4700	16000	
C 61 4_217.4	217.4	12.9	1600	2.4	3020	16000	6.4	1600	1.2	3500	16000	
C 61 4_238.3	238.3	11.7	1600	2.2	3060	16000	5.9	1600	1.1	3500	16000	
C 61 4_275.3	275.3	10.2	1600	1.9	3100	16000	5.1	1600	0.94	3500	16000	
C 61 4_301.7	301.7	9.3	1600	1.7	3130	16000	4.6	1600	0.85	3500	16000	
C 61 4_337.7	337.7	8.3	1600	1.5	3160	16000	4.1	1600	0.76	3500	16000	
C 61 4_370.1	370.1	7.6	1600	1.4	3180	16000	3.8	1600	0.70	3500	16000	
C 61 4_421.5	421.5	6.6	1600	1.2	3200	16000	3.3	1600	0.61	3500	16000	
C 61 4_462.0	462.0	6.1	1600	1.1	3220	16000	3.0	1600	0.56	3500	16000	
C 61 4_521.1	521.1	5.4	1600	0.99	3240	16000	2.7	1600	0.49	3500	16000	
C 61 4_571.2	571.2	4.9	1600	0.90	3250	16000	2.5	1600	0.45	3500	16000	
C 61 4_610.1	610.1	4.6	1600	0.84	3260	16000	2.3	1600	0.42	3500	16000	
C 61 4_668.8	668.8	4.2	1600	0.77	3280	16000	2.1	1600	0.39	3500	16000	
C 61 4_726.3	726.3	3.9	1600	0.71	3290	16000	1.9	1600	0.35	3500	16000	
C 61 4_796.1	796.1	3.5	1600	0.65	3300	16000	1.8	1600	0.32	3500	16000	

(—) Nehmen Sie bitte Kontakt mit unserem Applikationsdienst auf und geben die Querkraftsdaten an (Drehrichtung, Orientierung, Anordnung)

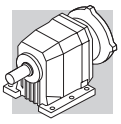

C 61 — 1600 Nm

	i	n_1 = 900 min^{-1}					n_1 = 500 min^{-1}					
		n_2 min^{-1}	M_{n2} Nm	P_{n1} kW	R_{n1} N	R_{n2} N	n_2 min^{-1}	M_{n2} Nm	P_{n1} kW	R_{n1} N	R_{n2} N	
C 61 2_2.8	2.8	321	565	20	2840	7150	179	665	13.1	4050	8790	149
C 61 2_3.7	3.7	243	625	16.8	3000	7800	135	665	9.9	4700	9860	
C 61 2_4.6	4.6	196	665	14.3	3170	8380	109	665	8.0	4700	10760	
C 61 2_6.0	6.0	150	665	11.0	4120	9440	83	665	6.1	4700	12000	
C 61 2_6.7	6.7	134	1350	20	2850	8050	75	1350	11.1	4700	10800	
C 61 2_7.5	7.5	120	1350	17.9	4010	8560	67	1350	9.9	4700	11400	
C 61 2_8.8	8.8	102	1350	15.2	4070	9240	57	1350	8.5	4700	12200	
C 61 2_9.8	9.8	92	1350	13.7	4310	9790	51	1350	7.6	4700	12900	
C 61 2_10.9	10.9	83	1350	12.3	4270	10200	46	1350	6.8	4700	13400	
C 61 2_12.1	12.1	74	1350	11.1	4480	10800	41	1350	6.1	4700	14100	
C 61 2_14.3	14.3	63	1350	9.4	4470	11600	35	1350	5.2	4700	15100	
C 61 2_15.9	15.9	57	1350	8.4	4660	12300	31	1350	4.7	4700	15900	
C 61 2_17.7	17.7	51	1350	7.6	4580	12800	28.2	1350	4.2	4700	16000	
C 61 2_19.6	19.6	46	1350	6.8	4700	13500	25.5	1350	3.8	4700	16000	
C 61 2_22.4	22.4	40	1350	6.0	4690	14200	22.3	1350	3.3	4700	16000	
C 61 2_24.8	24.8	36	1350	5.4	4700	14900	20.2	1350	3.0	4700	16000	
C 61 2_27.4	27.4	33	1350	4.9	4700	15500	18.2	1350	2.7	4700	16000	
C 61 2_30.4	30.4	29.6	1350	4.4	4700	16000	16.4	1350	2.4	4700	16000	
C 61 2_34.2	34.2	26.3	1265	3.7	4700	16000	14.6	1325	2.1	4700	16000	
C 61 2_38.0	38.0	23.7	1350	3.5	4700	16000	13.2	1350	2.0	4700	16000	
C 61 3_26.8	26.8	34	1600	6.0	4700	14500	18.7	1600	3.4	4700	16000	
C 61 3_29.4	29.4	31	1600	5.5	4700	15200	17.0	1600	3.1	4700	16000	
C 61 3_33.0	33.0	27.3	1600	4.9	4700	15900	15.2	1600	2.7	4700	16000	
C 61 3_36.1	36.1	24.9	1600	4.5	4700	16000	13.9	1600	2.5	4700	16000	
C 61 3_43.4	43.4	20.7	1600	3.7	4700	16000	11.5	1600	2.1	4700	16000	
C 61 3_47.6	47.6	18.9	1600	3.4	4700	16000	10.5	1600	1.9	4700	16000	
C 61 3_53.5	53.5	16.8	1600	3.0	4700	16000	9.3	1600	1.7	4700	16000	
C 61 3_58.6	58.6	15.4	1600	2.8	4700	16000	8.5	1600	1.5	4700	16000	
C 61 3_67.7	67.7	13.3	1600	2.4	4700	16000	7.4	1600	1.3	4700	16000	
C 61 3_74.2	74.2	12.1	1600	2.2	4700	16000	6.7	1600	1.2	4700	16000	
C 61 3_83.0	83.0	10.8	1600	2.0	4700	16000	6.0	1600	1.1	4700	16000	
C 61 3_91.0	91.0	9.9	1600	1.8	4700	16000	5.5	1600	0.99	4700	16000	
C 61 3_103.6	103.6	8.7	1600	1.6	4700	16000	4.8	1600	0.87	4700	16000	
C 61 3_113.6	113.6	7.9	1600	1.4	4700	16000	4.4	1600	0.79	4700	16000	
C 61 3_128.1	128.1	7.0	1600	1.3	4700	16000	3.9	1600	0.70	4700	16000	
C 61 3_140.5	140.5	6.4	1600	1.2	4700	16000	3.6	1600	0.64	4700	16000	
C 61 3_150.0	150.0	6.0	1600	1.1	4700	16000	3.3	1600	0.60	4700	16000	
C 61 3_164.5	164.5	5.5	1600	0.99	4700	16000	3.0	1600	0.55	4700	16000	
C 61 3_178.6	178.6	5.0	1600	0.91	4700	16000	2.8	1600	0.50	4700	16000	
C 61 3_195.8	195.8	4.6	1600	0.83	4700	16000	2.6	1600	0.46	4700	16000	
C 61 4_217.4	217.4	4.1	1600	0.76	3500	16000	2.3	1600	0.42	3500	16000	
C 61 4_238.3	238.3	3.8	1600	0.70	3500	16000	2.1	1600	0.39	3500	16000	
C 61 4_275.3	275.3	3.3	1600	0.60	3500	16000	1.8	1600	0.33	3500	16000	
C 61 4_301.7	301.7	3.0	1600	0.55	3500	16000	1.7	1600	0.31	3500	16000	
C 61 4_337.7	337.7	2.7	1600	0.49	3500	16000	1.5	1600	0.27	3500	16000	
C 61 4_370.1	370.1	2.4	1600	0.45	3500	16000	1.4	1600	0.25	3500	16000	
C 61 4_421.5	421.5	2.1	1600	0.39	3500	16000	1.2	1600	0.22	3500	16000	
C 61 4_462.0	462.0	1.9	1600	0.36	3500	16000	1.1	1600	0.20	3500	16000	
C 61 4_521.1	521.1	1.7	1600	0.32	3500	16000	1.0	1600	0.18	3500	16000	
C 61 4_571.2	571.2	1.6	1600	0.29	3500	16000	0.88	1600	0.16	3500	16000	
C 61 4_610.1	610.1	1.5	1600	0.27	3500	16000	0.82	1600	0.15	3500	16000	
C 61 4_668.8	668.8	1.3	1600	0.25	3500	16000	0.75	1600	0.14	3500	16000	
C 61 4_726.3	726.3	1.2	1600	0.23	3500	16000	0.69	1600	0.13	3500	16000	
C 61 4_796.1	796.1	1.1	1600	0.21	3500	16000	0.63	1600	0.12	3500	16000	

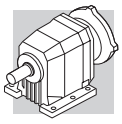

C 70 — 2300 Nm

	i	n_1 = 2800 min^{-1}					n_1 = 1400 min^{-1}					
		n_2 min^{-1}	M_{n2} Nm	P_{n1} kW	R_{n1} N	R_{n2} N	n_2 min^{-1}	M_{n2} Nm	P_{n1} kW	R_{n1} N	R_{n2} N	
C 70 2_4.6	4.6	613	1400	95	—	5590	306	1700	57	—	7100	152
C 70 2_5.9	5.9	479	1550	82	—	5610	239	1900	50	—	6990	
C 70 2_6.3	6.3	448	1600	79	1980	6570	224	1950	48	2630	8250	
C 70 2_7.5	7.5	375	1550	64	—	7130	188	1950	40	—	8400	
C 70 2_8.0	8.0	350	1750	68	1760	6840	175	2100	41	2670	8880	
C 70 2_9.5	9.5	294	1600	52	770	8260	147	2000	32	620	9910	
C 70 2_10.2	10.2	274	1900	57	2000	7200	137	2100	32	4470	10800	
C 70 2_11.2	11.2	250	1600	44	1130	9350	125	2000	28	1070	11300	
C 70 2_13.0	13.0	215	2050	49	1860	7700	107	2100	25	5600	12900	
C 70 2_14.1	14.1	199	1700	37	1100	10100	99	2100	23	1280	12400	
C 70 2_15.3	15.3	183	2100	42	1810	8540	91	2100	21	5860	14300	
C 70 2_16.7	16.7	168	1700	31	1570	11400	84	2050	18.9	2350	14300	
C 70 2_19.3	19.3	145	2100	34	2730	10400	73	2100	16.8	6000	16300	
C 70 2_22.9	22.9	123	2100	28	3160	11800	61	2100	14.2	6060	18000	
C 70 2_27.7	27.7	101	2100	23	3570	13400	51	2100	11.7	6120	19900	
C 70 2_34.7	34.7	81	2100	18.7	3960	15400	40	2100	9.3	6180	22200	
C 70 3_41.3	41.3	68	1900	14.5	5670	18400	34	2300	8.8	7000	22800	
C 70 3_44.7	44.7	63	1900	13.4	5700	19100	31	2300	8.1	7000	23800	
C 70 3_52.2	52.2	54	2050	12.4	5680	19600	26.8	2300	7.0	7000	25000	
C 70 3_56.5	56.5	50	2050	11.4	5710	20400	24.8	2300	6.4	7000	25000	
C 70 3_65.9	65.9	43	2200	10.5	5670	21000	21.3	2300	5.5	7000	25000	
C 70 3_71.3	71.3	39	2200	9.7	5710	21900	19.6	2300	5.1	7000	25000	
C 70 3_81.4	81.4	34	2300	8.9	5680	22700	17.2	2300	4.5	7000	25000	
C 70 3_88.2	88.2	32	2300	8.2	5710	23600	15.9	2300	4.1	7000	25000	
C 70 3_103.8	103.8	27.0	2300	7.0	5700	25000	13.5	2300	3.5	7000	25000	
C 70 3_112.4	112.4	24.9	2300	6.4	5740	25000	12.5	2300	3.2	7000	25000	
C 70 3_126.8	126.8	22.1	2300	5.7	5720	25000	11.0	2300	2.9	7000	25000	
C 70 3_137.4	137.4	20.4	2300	5.3	5750	25000	10.2	2300	2.6	7000	25000	
C 70 3_150.3	150.3	18.6	2300	4.8	5730	25000	9.3	2300	2.4	7000	25000	
C 70 3_162.8	162.8	17.2	2300	4.5	5760	25000	8.6	2300	2.2	7000	25000	
C 70 3_179.2	179.2	15.6	2300	4.0	5740	25000	7.8	2300	2.0	7000	25000	
C 70 3_194.1	194.1	14.4	2300	3.7	5770	25000	7.2	2300	1.9	7000	25000	
C 70 3_220.9	220.9	12.7	2250	3.2	5750	25000	6.3	2250	1.6	7000	25000	
C 70 3_239.3	239.3	11.7	2300	3.0	5770	25000	5.8	2300	1.5	7000	25000	
C 70 4_251.3	251.3	11.1	2300	2.9	2000	25000	5.6	2300	1.5	2620	25000	
C 70 4_272.2	272.2	10.3	2300	2.7	2030	25000	5.1	2300	1.4	2650	25000	
C 70 4_317.9	317.9	8.8	2300	2.3	2030	25000	4.4	2300	1.2	2650	25000	
C 70 4_344.3	344.3	8.1	2300	2.2	2050	25000	4.1	2300	1.1	2670	25000	
C 70 4_409.4	409.4	6.8	2300	1.8	2050	25000	3.4	2300	0.90	2670	25000	
C 70 4_443.5	443.5	6.3	2300	1.7	2070	25000	3.2	2300	0.80	2700	25000	
C 70 4_512.0	512.0	5.5	2300	1.4	2070	25000	2.7	2300	0.70	2680	25000	
C 70 4_554.7	554.7	5.0	2300	1.3	2090	25000	2.5	2300	0.70	2710	25000	
C 70 4_606.8	606.8	4.6	2300	1.2	2080	25000	2.3	2300	0.60	2700	25000	
C 70 4_657.3	657.3	4.3	2300	1.1	2100	25000	2.1	2300	0.60	2720	25000	
C 70 4_736.0	736.0	3.8	2300	1.0	2090	25000	1.9	2300	0.50	2700	25000	
C 70 4_797.3	797.3	3.5	2300	0.90	2110	25000	1.8	2300	0.50	2720	25000	
C 70 4_922.6	922.6	3.0	2300	0.80	2100	25000	1.5	2300	0.40	2710	25000	
C 70 4_999.5	999.5	2.8	2300	0.70	2110	25000	1.4	2300	0.40	2730	25000	
C 70 4_1069	1069	2.6	2300	0.70	2100	25000	1.3	2300	0.30	2720	25000	
C 70 4_1158	1158	2.4	2300	0.60	2100	25000	1.2	2300	0.30	2800	25000	
C 70 4_1362	1362	2.1	2300	0.50	2100	25000	1.0	2300	0.30	2800	25000	
C 70 4_1476	1476	1.9	2300	0.50	2100	25000	0.90	2300	0.30	2800	25000	

(—) Nehmen Sie bitte Kontakt mit unserem Applikationsdienst auf und geben die Querkraftsdaten an (Drehrichtung, Orientierung, Anordnung)

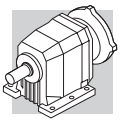

C 70 — 2300 Nm

	i	n_1 = 900 min^{-1}					n_1 = 500 min^{-1}					
		n_2 min^{-1}	M_{n2} Nm	P_{n1} kW	R_{n1} N	R_{n2} N	n_2 min^{-1}	M_{n2} Nm	P_{n1} kW	R_{n1} N	R_{n2} N	
C 70 2_4.6	4.6	197	1800	39	650	9360	109	1800	22	5500	13900	152
C 70 2_5.9	5.9	154	1950	33	560	9980	85	2150	20	2890	13400	
C 70 2_6.3	6.3	144	2100	33	4260	10400	80	2100	18.5	7000	15500	
C 70 2_7.5	7.5	121	2100	28	1120	10800	67	2150	15.9	5400	15600	
C 70 2_8.0	8.0	113	2100	26	5800	12500	63	2100	14.5	7000	17800	
C 70 2_9.5	9.5	95	2150	22	2140	12400	53	2150	12.4	6990	18100	
C 70 2_10.2	10.2	88	2100	20	6870	14600	49	2100	11.3	7000	20200	
C 70 2_11.2	11.2	80	2150	19.0	2620	14000	45	2150	10.6	7000	19800	
C 70 2_13.0	13.0	69	2100	16.0	7000	16900	38	2100	8.9	7000	22800	
C 70 2_14.1	14.1	64	2150	15.1	3900	16000	35	2150	8.4	7000	22300	
C 70 2_15.3	15.3	59	2100	13.6	7000	18400	33	2100	7.5	7000	24600	
C 70 2_16.7	16.7	54	2050	12.2	5470	18500	29.9	2050	6.8	7000	25000	
C 70 2_19.3	19.3	47	2100	10.8	7000	20700	25.9	2100	6.0	7000	25000	
C 70 2_22.9	22.9	39	2100	9.1	7000	22500	21.9	2100	5.1	7000	25000	
C 70 2_27.7	27.7	32	2100	7.5	7000	24600	18.0	2100	4.2	7000	25000	
C 70 2_34.7	34.7	25.9	2100	6.0	7000	25000	14.4	2100	3.3	7000	25000	
C 70 3_41.3	41.3	21.8	2300	5.6	7000	25000	12.1	2300	3.1	7000	25000	
C 70 3_44.7	44.7	20.1	2300	5.2	7000	25000	11.2	2300	2.9	7000	25000	
C 70 3_52.2	52.2	17.3	2300	4.5	7000	25000	9.6	2300	2.5	7000	25000	
C 70 3_56.5	56.5	15.9	2300	4.1	7000	25000	8.8	2300	2.3	7000	25000	
C 70 3_65.9	65.9	13.7	2300	3.5	7000	25000	7.6	2300	2.0	7000	25000	
C 70 3_71.3	71.3	12.6	2300	3.3	7000	25000	7.0	2300	1.8	7000	25000	
C 70 3_81.4	81.4	11.1	2300	2.9	7000	25000	6.1	2300	1.6	7000	25000	
C 70 3_88.2	88.2	10.2	2300	2.6	7000	25000	5.7	2300	1.5	7000	25000	
C 70 3_103.8	103.8	8.7	2300	2.2	7000	25000	4.8	2300	1.2	7000	25000	
C 70 3_112.4	112.4	8.0	2300	2.1	7000	25000	4.4	2300	1.2	7000	25000	
C 70 3_126.8	126.8	7.1	2300	1.8	7000	25000	3.9	2300	1.0	7000	25000	
C 70 3_137.4	137.4	6.6	2300	1.7	7000	25000	3.6	2300	0.90	7000	25000	
C 70 3_150.3	150.3	6.0	2300	1.6	7000	25000	3.3	2300	0.90	7000	25000	
C 70 3_162.8	162.8	5.5	2300	1.4	7000	25000	3.1	2300	0.80	7000	25000	
C 70 3_179.2	179.2	5.0	2300	1.3	7000	25000	2.8	2300	0.70	7000	25000	
C 70 3_194.1	194.1	4.6	2300	1.2	7000	25000	2.6	2300	0.70	7000	25000	
C 70 3_220.9	220.9	4.1	2250	1.0	7000	25000	2.3	2250	0.60	7000	25000	
C 70 3_239.3	239.3	3.8	2300	1.0	7000	25000	2.1	2300	0.50	7000	25000	
C 70 4_251.3	251.3	3.6	2300	0.90	2000	25000	2.0	2300	0.50	2620	25000	
C 70 4_272.2	272.2	3.3	2300	0.90	2030	25000	1.8	2300	0.50	2650	25000	
C 70 4_317.9	317.9	2.8	2300	0.70	2030	25000	1.6	2300	0.40	2650	25000	
C 70 4_344.3	344.3	2.6	2300	0.70	2050	25000	1.5	2300	0.40	2670	25000	
C 70 4_409.4	409.4	2.2	2300	0.60	2050	25000	1.2	2300	0.30	2670	25000	
C 70 4_443.5	443.5	2.0	2300	0.50	2070	25000	1.1	2300	0.30	2700	25000	
C 70 4_512.0	512.0	1.8	2300	0.50	2070	25000	1.0	2300	0.30	2680	25000	
C 70 4_554.7	554.7	1.6	2300	0.40	2090	25000	0.90	2300	0.20	2710	25000	
C 70 4_606.8	606.8	1.5	2300	0.40	2080	25000	0.80	2300	0.20	2700	25000	
C 70 4_657.3	657.3	1.4	2300	0.40	2100	25000	0.80	2300	0.20	2720	25000	
C 70 4_736.0	736.0	1.2	2300	0.30	2090	25000	0.70	2300	0.20	2700	25000	
C 70 4_797.3	797.3	1.1	2300	0.30	2110	25000	0.60	2300	0.20	2720	25000	
C 70 4_922.6	922.6	1.0	2300	0.30	2100	25000	0.50	2300	0.10	2710	25000	
C 70 4_999.5	999.5	0.90	2300	0.20	2110	25000	0.50	2300	0.10	2730	25000	
C 70 4_1069	1069	0.80	2300	0.20	2100	25000	0.50	2300	0.10	2720	25000	
C 70 4_1158	1158	0.80	2300	0.20	2100	25000	0.40	2300	0.10	2800	25000	
C 70 4_1362	1362	0.70	2300	0.20	2100	25000	0.40	2300	0.10	2800	25000	
C 70 4_1476	1476	0.60	2300	0.20	2100	25000	0.30	2300	0.10	2800	25000	

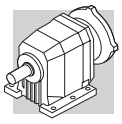

C 80 — 4000 Nm

	i	n_1 = 2800 min^{-1}					n_1 = 1400 min^{-1}					
		n_2 min^{-1}	M_{n2} Nm	P_{n1} kW	R_{n1} N	R_{n2} N	n_2 min^{-1}	M_{n2} Nm	P_{n1} kW	R_{n1} N	R_{n2} N	
C 80 2_5.6	5.6	496	2400	131	370	10900	248	3100	85	690	12300	155
C 80 2_6.1	6.1	458	2450	124	890	11000	229	3150	80	1380	12700	
C 80 2_7.0	7.0	398	2650	116	350	11000	199	3350	73	910	12900	
C 80 2_7.6	7.6	367	2700	109	890	11300	183	3400	69	1600	13300	
C 80 2_8.9	8.9	316	2800	98	420	12100	158	3500	61	1120	14500	
C 80 2_9.6	9.6	292	3000	96	520	11300	146	3700	59	1380	13900	
C 80 2_11.1	11.1	252	2800	78	1110	14200	126	3500	49	1950	17100	
C 80 2_12.0	12.0	233	3000	77	1200	13500	116	3700	48	2190	16600	
C 80 2_13.8	13.8	203	2800	63	1420	16400	102	3500	39	2330	19800	
C 80 2_14.9	14.9	188	3000	62	1510	15800	94	3700	38	2560	19300	
C 80 2_16.7	16.7	168	2800	52	1840	18500	84	3500	32	2840	22300	
C 80 2_18.1	18.1	155	3000	50	1930	17900	78	3700	32	3060	22000	
C 80 2_20.5	20.5	136	2850	43	2000	20500	68	3550	27	3060	24800	
C 80 2_22.2	22.2	126	3000	42	2210	20300	63	3700	26	3400	24900	
C 80 2_24.0	24.0	117	2850	37	2090	22400	58	3550	23	3180	27000	
C 80 2_25.9	25.9	108	3000	36	2300	22300	54	3700	22	3510	27200	
C 80 2_31.3	31.3	89	3000	30	2480	24700	45	3700	18.2	3730	30000	
C 80 2_39.1	39.1	72	2500	19.7	3820	31000	36	3200	12.6	5060	35000	
C 80 3_43.5	43.5	64	3100	23	5610	28700	32	3800	13.8	7000	34800	
C 80 3_47.4	47.4	59	3100	21	5660	30000	29.5	3800	12.6	7000	35000	
C 80 3_57.3	57.3	49	3400	18.7	5620	30500	24.4	4000	11.0	7000	35000	
C 80 3_62.5	62.5	45	3400	17.1	5670	31800	22.4	4000	10.1	7000	35000	
C 80 3_70.5	70.5	40	3650	16.3	5620	32200	19.9	4000	8.9	7000	35000	
C 80 3_76.9	76.9	36	3600	14.8	5670	33900	18.2	4000	8.2	7000	35000	
C 80 3_89.3	89.3	31	3900	13.8	5620	34700	15.7	4000	7.1	7000	35000	
C 80 3_97.4	97.4	28.7	3900	12.6	5670	35000	14.4	4000	6.5	7000	35000	
C 80 3_109.5	109.5	25.5	4000	11.5	5630	35000	12.8	4000	5.8	7000	35000	
C 80 3_119.5	119.5	23.4	4000	10.6	5680	35000	11.7	4000	5.3	7000	35000	
C 80 3_136.7	136.7	20.5	4000	9.2	5660	35000	10.2	4000	4.6	7000	35000	
C 80 3_149.1	149.1	18.8	4000	8.5	5700	35000	9.4	4000	4.2	7000	35000	
C 80 3_169.0	169.0	16.6	4000	7.5	5680	35000	8.3	4000	3.7	7000	35000	
C 80 3_184.4	184.4	15.2	4000	6.8	5720	35000	7.6	4000	3.4	7000	35000	
C 80 3_197.9	197.9	14.2	3800	6.1	5710	35000	7.1	3800	3.0	7000	35000	
C 80 3_215.8	215.8	13.0	4000	5.8	5730	35000	6.5	4000	2.9	7000	35000	
C 80 4_261.9	261.9	10.7	4000	4.9	1850	35000	5.3	4000	2.5	2470	35000	
C 80 4_285.7	285.7	9.8	4000	4.5	1890	35000	4.9	4000	2.3	2510	35000	
C 80 4_334.3	334.3	8.4	4000	3.9	1880	35000	4.2	4000	1.9	2500	35000	
C 80 4_364.7	364.7	7.7	4000	3.5	1920	35000	3.8	4000	1.8	2540	35000	
C 80 4_417.5	417.5	6.7	4000	3.1	1910	35000	3.4	4000	1.5	2530	35000	
C 80 4_455.4	455.4	6.1	4000	2.8	1950	35000	3.1	4000	1.4	2570	35000	
C 80 4_529.3	529.3	5.3	4000	2.4	1940	35000	2.6	4000	1.2	2550	35000	
C 80 4_577.4	577.4	4.8	4000	2.2	1970	35000	2.4	4000	1.1	2590	35000	
C 80 4_664.3	664.3	4.2	4000	1.9	1960	35000	2.1	4000	1.0	2570	35000	
C 80 4_724.7	724.7	3.9	4000	1.8	1990	35000	1.9	4000	0.90	2610	35000	
C 80 4_783.4	783.4	3.6	4000	1.6	1970	35000	1.8	4000	0.80	2590	35000	
C 80 4_854.6	854.6	3.3	4000	1.5	2000	35000	1.6	4000	0.80	2620	35000	
C 80 4_945.7	945.7	3.0	4000	1.4	1980	35000	1.5	4000	0.70	2600	35000	
C 80 4_1032	1032	2.7	4000	1.2	2010	35000	1.4	4000	0.60	2630	35000	
C 80 4_1168	1168	2.4	4000	1.1	1980	35000	1.2	4000	0.60	2600	35000	
C 80 4_1274	1274	2.2	4000	1.0	2020	35000	1.1	4000	0.50	2640	35000	
C 80 4_1358	1358	2.1	4000	0.90	1990	35000	1.0	4000	0.50	2610	35000	
C 80 4_1481	1481	1.9	4000	0.90	2030	35000	0.90	4000	0.40	2640	35000	

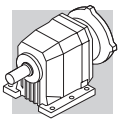

C 80 — 4000 Nm

	i	n_1 = 900 min^{-1}					n_1 = 500 min^{-1}					
		n_2 min^{-1}	M_{n2} Nm	P_{n1} kW	R_{n1} N	R_{n2} N	n_2 min^{-1}	M_{n2} Nm	P_{n1} kW	R_{n1} N	R_{n2} N	
C 80 2_5.6	5.6	160	3500	62	1480	14400	89	3500	34	4970	21600	155
C 80 2_6.1	6.1	147	3600	58	2100	14400	82	3700	33	5270	21200	
C 80 2_7.0	7.0	128	3500	49	2630	17000	71	3500	27	6130	24600	
C 80 2_7.6	7.6	118	3650	47	3060	16800	66	3650	26	6550	24600	
C 80 2_8.9	8.9	102	3500	39	3330	19900	56	3500	22	6800	27800	
C 80 2_9.6	9.6	94	3700	38	3590	19400	52	3700	21	7000	27700	
C 80 2_11.1	11.1	81	3500	31	4160	22800	45	3500	17.4	7000	31200	
C 80 2_12.0	12.0	75	3700	31	4400	22500	42	3700	17.0	7000	31200	
C 80 2_13.8	13.8	65	3500	25	4540	25700	36	3500	14.0	7000	34700	
C 80 2_14.9	14.9	60	3700	25	4770	25500	34	3700	13.7	7000	34700	
C 80 2_16.7	16.7	54	3500	21	5050	28500	30	3500	11.6	7000	35000	
C 80 2_18.1	18.1	50	3700	20	5280	28400	27.7	3700	11.3	7000	35000	
C 80 2_20.5	20.5	44	3550	17.2	5270	31400	24.4	3550	9.5	7000	35000	
C 80 2_22.2	22.2	40	3700	16.5	5610	31600	22.5	3700	9.2	7000	35000	
C 80 2_24.0	24.0	38	3550	14.7	5390	33800	20.9	3550	8.2	7000	35000	
C 80 2_25.9	25.9	35	3700	14.1	5730	34200	19.3	3700	7.9	7000	35000	
C 80 2_31.3	31.3	28.7	3700	11.7	5940	35000	16.0	3700	6.5	7000	35000	
C 80 2_39.1	39.1	23.0	3200	8.1	7000	35000	12.8	3200	4.5	7000	35000	
C 80 3_43.5	43.5	20.7	4000	9.3	7000	35000	11.5	4000	5.2	7000	35000	
C 80 3_47.4	47.4	19.0	4000	8.5	7000	35000	10.5	4000	4.7	7000	35000	
C 80 3_57.3	57.3	15.7	4000	7.1	7000	35000	8.7	4000	3.9	7000	35000	
C 80 3_62.5	62.5	14.4	4000	6.5	7000	35000	8.0	4000	3.6	7000	35000	
C 80 3_70.5	70.5	12.8	4000	5.7	7000	35000	7.1	4000	3.2	7000	35000	
C 80 3_76.9	76.9	11.7	4000	5.3	7000	35000	6.5	4000	2.9	7000	35000	
C 80 3_89.3	89.3	10.1	4000	4.5	7000	35000	5.6	4000	2.5	7000	35000	
C 80 3_97.4	97.4	9.2	4000	4.2	7000	35000	5.1	4000	2.3	7000	35000	
C 80 3_109.5	109.5	8.2	4000	3.7	7000	35000	4.6	4000	2.1	7000	35000	
C 80 3_119.5	119.5	7.5	4000	3.4	7000	35000	4.2	4000	1.9	7000	35000	
C 80 3_136.7	136.7	6.6	4000	3.0	7000	35000	3.7	4000	1.6	7000	35000	
C 80 3_149.1	149.1	6.0	4000	2.7	7000	35000	3.4	4000	1.5	7000	35000	
C 80 3_169.0	169.0	5.3	4000	2.4	7000	35000	3.0	4000	1.3	7000	35000	
C 80 3_184.4	184.4	4.9	4000	2.2	7000	35000	2.7	4000	1.2	7000	35000	
C 80 3_197.9	197.9	4.5	3800	1.9	7000	35000	2.5	3800	1.1	7000	35000	
C 80 3_215.8	215.8	4.2	4000	1.9	7000	35000	2.3	4000	1.0	7000	35000	
C 80 4_261.9	261.9	3.4	4000	1.6	2950	35000	1.9	4000	0.90	3500	35000	
C 80 4_285.7	285.7	3.2	4000	1.4	2990	35000	1.8	4000	0.80	3500	35000	
C 80 4_334.3	334.3	2.7	4000	1.2	2980	35000	1.5	4000	0.70	3500	35000	
C 80 4_364.7	364.7	2.5	4000	1.1	3020	35000	1.4	4000	0.60	3500	35000	
C 80 4_417.5	417.5	2.2	4000	1.0	3000	35000	1.2	4000	0.60	3500	35000	
C 80 4_455.4	455.4	2.0	4000	0.90	3050	35000	1.1	4000	0.50	3500	35000	
C 80 4_529.3	529.3	1.7	4000	0.80	3030	35000	0.90	4000	0.40	3500	35000	
C 80 4_577.4	577.4	1.6	4000	0.70	3070	35000	0.90	4000	0.40	3500	35000	
C 80 4_664.3	664.3	1.4	4000	0.60	3050	35000	0.80	4000	0.30	3500	35000	
C 80 4_724.7	724.7	1.2	4000	0.60	3090	35000	0.70	4000	0.30	3500	35000	
C 80 4_783.4	783.4	1.1	4000	0.50	3060	35000	0.60	4000	0.30	3500	35000	
C 80 4_854.6	854.6	1.1	4000	0.50	3100	35000	0.60	4000	0.30	3500	35000	
C 80 4_945.7	945.7	1.0	4000	0.40	3070	35000	0.50	4000	0.20	3500	35000	
C 80 4_1032	1032	0.90	4000	0.40	3110	35000	0.50	4000	0.20	3500	35000	
C 80 4_1168	1168	0.80	4000	0.40	3080	35000	0.40	4000	0.20	3500	35000	
C 80 4_1274	1274	0.70	4000	0.30	3110	35000	0.40	4000	0.20	3500	35000	
C 80 4_1358	1358	0.70	4000	0.30	3090	35000	0.40	4000	0.20	3500	35000	
C 80 4_1481	1481	0.60	4000	0.30	3120	35000	0.30	4000	0.20	3500	35000	

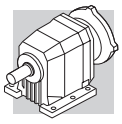

C 90 — 7200 Nm

	i	n_1 = 2800 min^{-1}					n_1 = 1400 min^{-1}					
		n_2 min^{-1}	M_{n2} Nm	P_{n1} kW	R_{n1} N	R_{n2} N	n_2 min^{-1}	M_{n2} Nm	P_{n1} kW	R_{n1} N	R_{n2} N	
C 90 2_5.2	5.2	542	3500	209	1700	12800	271	4300	128	2170	15800	
C 90 2_5.6	5.6	500	3600	198	3240	12800	250	4400	121	4250	16000	
C 90 2_6.8	6.8	414	3850	176	1860	13400	207	4750	108	2210	16400	
C 90 2_7.3	7.3	383	3950	167	3470	13500	191	4850	102	4360	16700	
C 90 2_8.3	8.3	336	4150	154	2010	13800	168	5100	94	2540	17100	
C 90 2_9.0	9.0	310	4250	145	3660	14000	155	5200	89	4720	17500	
C 90 2_10.4	10.4	270	4500	134	990	14200	135	5550	83	1150	17400	
C 90 2_11.2	11.2	249	4600	126	2750	14400	125	5650	78	3460	17800	
C 90 2_12.8	12.8	219	4850	117	580	14700	109	5950	72	840	18200	
C 90 2_13.9	13.9	202	4900	109	2700	15300	101	6050	67	3220	18700	
C 90 2_16.0	16.0	175	5050	98	690	16800	88	6200	60	950	20800	
C 90 2_17.3	17.3	162	5300	94	1670	15900	81	6500	58	2200	19800	
C 90 2_18.7	18.7	150	5050	83	1140	19600	75	6200	51	1500	24300	
C 90 2_20.2	20.2	138	5400	82	1540	17900	69	6600	50	2160	22500	
C 90 2_22.9	22.9	122	5050	68	2110	22400	61	6200	42	2700	27600	
C 90 2_24.8	24.8	113	5400	67	2500	21900	56	6600	41	3340	27300	
C 90 2_27.2	27.2	103	4500	51	6160	26000	52	5500	31	7820	32200	
C 90 2_29.4	29.4	95	4800	50	6560	26000	48	5900	31	8130	32000	
C 90 2_35.1	35.1	80	4400	39	8090	29400	40	5400	24	11100	36300	
C 90 3_39.4	39.4	71	6350	51	10800	23900	36	7100	28	13700	32900	
C 90 3_43.0	43.0	65	6500	48	10800	24700	33	7200	26	13800	34000	
C 90 3_50.3	50.3	56	6800	43	10800	26000	27.8	7100	22	13800	37000	
C 90 3_54.9	54.9	51	7000	40	10900	26500	25.5	7200	21	13900	38300	
C 90 3_59.2	59.2	47	7100	38	10800	27700	23.6	7100	18.9	13900	40000	
C 90 3_64.6	64.6	43	7200	35	10900	29100	21.7	7200	17.6	14000	41300	
C 90 3_74.4	74.4	38	7100	30	10900	31900	18.8	7100	15.0	14000	44400	
C 90 3_81.2	81.2	34	7200	28	10900	33000	17.2	7200	14.0	14100	45900	158
C 90 3_88.2	88.2	32	7100	25	11000	34800	15.9	7100	12.7	14000	47900	
C 90 3_96.2	96.2	29.1	7200	24	11000	35900	14.5	7200	11.8	14100	49400	
C 90 3_107.0	107.0	26.2	7100	21	11000	38100	13.1	7100	10.5	14100	52100	
C 90 3_116.7	116.7	24.0	7200	19.4	11000	39400	12.0	7200	9.7	14100	53700	
C 90 3_134.1	134.1	20.9	7100	16.7	11000	42400	10.4	7100	8.3	14100	57300	
C 90 3_146.3	146.3	19.1	7200	15.5	11000	43800	9.6	7200	7.8	14200	59000	
C 90 3_157.8	157.8	17.7	7100	14.2	11000	45600	8.9	7100	7.1	14100	60000	
C 90 3_172.1	172.1	16.3	7200	13.2	11000	47100	8.1	7200	6.6	14200	60000	
C 90 4_212.4	212.4	13.2	7200	10.9	—	60000	6.6	7200	5.5	1180	60000	
C 90 4_231.7	231.7	12.1	7200	10.0	—	60000	6.0	7200	5.0	1560	60000	
C 90 4_268.5	268.5	10.4	7200	8.6	—	60000	5.2	7200	4.3	1540	60000	
C 90 4_292.9	292.9	9.6	7200	7.9	—	60000	4.8	7200	4.0	1880	60000	
C 90 4_339.0	339.0	8.3	7200	6.8	—	60000	4.1	7200	3.4	1720	60000	
C 90 4_369.8	369.8	7.6	7200	6.3	—	60000	3.8	7200	3.1	2050	60000	
C 90 4_419.0	419.0	6.7	7200	5.5	—	60000	3.3	7200	2.8	1890	60000	
C 90 4_457.1	457.1	6.1	7200	5.1	—	60000	3.1	7200	2.5	2210	60000	
C 90 4_534.2	534.2	5.2	7200	4.3	—	60000	2.6	7200	2.2	2090	60000	
C 90 4_582.8	582.8	4.8	7200	4.0	—	60000	2.4	7200	2.0	2270	60000	
C 90 4_652.8	652.8	4.3	7200	3.6	—	60000	2.1	7200	1.8	2160	60000	
C 90 4_712.2	712.2	3.9	7200	3.3	—	60000	2.0	7200	1.6	2290	60000	
C 90 4_773.6	773.6	3.3	7200	3.0	—	60000	1.8	7200	1.5	2250	60000	
C 90 4_844.0	844.0	3.0	7200	2.7	—	60000	1.7	7200	1.4	2310	60000	
C 90 4_922.3	922.3	2.8	7200	2.5	—	60000	1.5	7200	1.3	2260	60000	
C 90 4_1006	1006	2.5	7200	2.3	—	60000	1.4	7200	1.2	2320	60000	
C 90 4_1137	1137	2.3	7200	2.0	—	60000	1.2	7200	1.0	2270	60000	
C 90 4_1240	1240	2.2	7200	1.9	—	60000	1.1	7200	0.90	2230	60000	

(—) Nehmen Sie bitte Kontakt mit unserem Applikationsdienst auf und geben die Querkraftsdaten an (Drehrichtung, Orientierung, Anordnung)

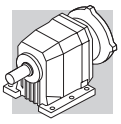

C 90 — 7200 Nm

	i	n_1 = 900 min^{-1}					n_1 = 500 min^{-1}					
		n_2 min^{-1}	M_{n2} Nm	P_{n1} kW	R_{n1} N	R_{n2} N	n_2 min^{-1}	M_{n2} Nm	P_{n1} kW	R_{n1} N	R_{n2} N	
C 90 2_5.2	5.2	174	4900	94	2560	18200	97	5850	62	3010	21600	
C 90 2_5.6	5.6	161	5050	89	4640	18100	89	6000	59	5720	21800	
C 90 2_6.8	6.8	133	5450	80	2310	18500	74	6200	51	5130	24600	
C 90 2_7.3	7.3	123	5550	75	4890	18900	68	6550	49	6340	23200	
C 90 2_8.3	8.3	108	5850	70	2700	19300	60	6200	41	8870	27800	
C 90 2_9.0	9.0	100	5950	65	5300	19800	55	6600	40	9660	27600	
C 90 2_10.4	10.4	87	6200	59	2250	21000	48	6200	33	11000	31000	
C 90 2_11.2	11.2	80	6450	57	3960	20400	45	6600	32	11700	30800	
C 90 2_12.8	12.8	70	6250	48	4500	25300	39	6250	27	13200	34100	
C 90 2_13.9	13.9	65	6550	47	5830	24400	36	6550	26	14600	34300	
C 90 2_16.0	16.0	56	6200	38	6570	28700	31	6200	21	15000	38000	
C 90 2_17.3	17.3	52	6550	38	7530	28600	28.9	6550	21	15000	38100	
C 90 2_18.7	18.7	48	6200	33	7120	31000	26.7	6200	18.3	15000	40700	
C 90 2_20.2	20.2	44	6600	32	7780	30800	24.8	6600	18.0	15000	40700	
C 90 2_22.9	22.9	39	6200	27	8310	34200	21.8	6200	14.9	15000	44500	
C 90 2_24.8	24.8	36	6600	26	8950	34100	20.2	6600	14.6	15000	44600	
C 90 2_27.2	27.2	33	5500	20	13400	39200	18.4	5500	11.2	15000	50000	
C 90 2_29.4	29.4	31	5900	19.9	13700	39100	17.0	5900	11.0	15000	50200	
C 90 2_35.1	35.1	25.6	5400	15.3	14100	43800	14.2	5400	8.5	15000	55500	
C 90 3_39.4	39.4	22.8	7100	18.3	15000	40600	12.7	7100	10.1	15000	40600	
C 90 3_43.0	43.0	20.9	7200	17.0	15000	42000	11.6	7200	9.4	15000	42000	
C 90 3_50.3	50.3	17.9	7100	14.3	15000	45400	9.9	7100	7.9	15000	45400	
C 90 3_54.9	54.9	16.4	7200	13.3	15000	46900	9.1	7200	7.4	15000	46900	
C 90 3_59.2	59.2	15.2	7100	12.2	15000	48800	8.4	7100	6.8	15000	48800	
C 90 3_64.6	64.6	13.9	7200	11.3	15000	50400	7.7	7200	6.3	15000	50400	
C 90 3_74.4	74.4	12.1	7100	9.7	15000	53800	6.7	7100	5.4	15000	53800	
C 90 3_81.2	81.2	11.1	7200	9.0	15000	55500	6.2	7200	5.0	15000	55500	158
C 90 3_88.2	88.2	10.2	7100	8.2	15000	57800	5.7	7100	4.5	15000	57800	
C 90 3_96.2	96.2	9.4	7200	7.6	15000	59600	5.2	7200	4.2	15000	59600	
C 90 3_107.0	107.0	8.4	7100	6.7	15000	60000	4.7	7100	3.7	15000	60000	
C 90 3_116.7	116.7	7.7	7200	6.3	15000	60000	4.3	7200	3.5	15000	60000	
C 90 3_134.1	134.1	6.7	7100	5.4	15000	60000	3.7	7100	3.0	15000	60000	
C 90 3_146.3	146.3	6.2	7200	5.0	15000	60000	3.4	7200	2.8	15000	60000	
C 90 3_157.8	157.8	5.7	7100	4.6	15000	60000	3.2	7100	2.5	15000	60000	
C 90 3_172.1	172.1	5.2	7200	4.2	15000	60000	2.9	7200	2.4	15000	60000	
C 90 4_212.4	212.4	4.2	7200	3.5	2090	60000	2.4	7200	2.0	3210	60000	
C 90 4_231.7	231.7	3.9	7200	3.2	2460	60000	2.2	7200	1.8	3290	60000	
C 90 4_268.5	268.5	3.4	7200	2.8	2440	60000	1.9	7200	1.5	3300	60000	
C 90 4_292.9	292.9	3.1	7200	2.5	2620	60000	1.7	7200	1.4	3370	60000	
C 90 4_339.0	339.0	2.7	7200	2.2	2590	60000	1.5	7200	1.2	3340	60000	
C 90 4_369.8	369.8	2.4	7200	2.0	2660	60000	1.4	7200	1.1	3420	60000	
C 90 4_419.0	419.0	2.1	7200	1.8	2630	60000	1.2	7200	1.0	3390	60000	
C 90 4_457.1	457.1	2.0	7200	1.6	2700	60000	1.1	7200	0.90	3460	60000	
C 90 4_534.2	534.2	1.7	7200	1.4	2680	60000	0.90	7200	0.80	3380	60000	
C 90 4_582.8	582.8	1.5	7200	1.3	2750	60000	0.90	7200	0.70	3500	60000	
C 90 4_652.8	652.8	1.4	7200	1.1	2700	60000	0.80	7200	0.60	3450	60000	
C 90 4_712.2	712.2	1.3	7200	1.0	2760	60000	0.70	7200	0.60	3500	60000	
C 90 4_773.6	773.6	1.2	7200	1.0	2720	60000	0.60	7200	0.50	3480	60000	
C 90 4_844.0	844.0	1.1	7200	0.90	2790	60000	0.60	7200	0.50	3500	60000	
C 90 4_922.3	922.3	1.0	7200	0.80	2730	60000	0.50	7200	0.40	3490	60000	
C 90 4_1006	1006	0.90	7200	0.70	2800	60000	0.50	7200	0.40	3500	60000	
C 90 4_1137	1137	0.80	7200	0.70	2740	60000	0.40	7200	0.40	3500	60000	
C 90 4_1240	1240	0.70	7200	0.60	2800	60000	0.40	7200	0.30	3500	60000	

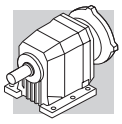

C 100 — 12000 Nm

	i	n_1 = 2800 min^{-1}					n_1 = 1400 min^{-1}					
		n_2 min^{-1}	M_{n2} Nm	P_{n1} kW	R_{n1} N	R_{n2} N	n_2 min^{-1}	M_{n2} Nm	P_{n1} kW	R_{n1} N	R_{n2} N	
C 100 2_4.9	4.9	569	5500	345	1900	20600	285	6800	213	3790	25300	
C 100 2_5.3	5.3	525	5650	327	2790	21000	263	6950	201	4940	25800	
C 100 2_6.5	6.5	429	6150	291	1920	21800	215	7550	179	3950	27000	
C 100 2_7.1	7.1	396	6200	271	3100	22700	198	7650	167	5270	27900	
C 100 2_8.4	8.4	335	6700	248	1870	22800	168	8200	152	3970	28500	
C 100 2_9.0	9.0	309	6800	232	2950	23500	155	8350	142	5190	29200	
C 100 2_10.1	10.1	278	7100	217	1930	24100	139	8750	134	3900	29500	
C 100 2_10.9	10.9	256	7100	200	3240	25700	128	8750	124	5460	31600	
C 100 2_12.5	12.5	225	7650	190	1360	24900	112	9400	117	3260	30800	
C 100 2_13.5	13.5	208	7700	176	2600	26300	104	9500	109	4680	32100	
C 100 2_15.2	15.2	184	8100	164	1270	26600	92	10000	101	2680	32500	
C 100 2_16.5	16.5	170	8250	154	2320	27200	85	10150	95	4420	33600	
C 100 2_18.7	18.7	150	8200	136	1500	30800	75	10000	83	3600	38000	
C 100 2_20.2	20.2	138	8100	124	3047	32200	69	10000	76	5210	39600	
C 100 2_22.2	22.2	126	7500	104	3570	35800	63	9200	64	5960	44100	
C 100 2_24.1	24.1	116	8100	104	3620	35200	58	10000	64	5900	43300	
C 100 2_29.6	29.6	95	6900	72	6380	42400	47	8500	44	9220	52200	
C 100 3_34.3	34.3	82	10350	95	9790	33300	41	11700	54	13000	46400	
C 100 3_36.9	36.9	76	10650	91	10200	34500	38	11800	50	13100	48000	
C 100 3_42.9	42.9	65	11350	83	9640	33200	33	12000	44	13100	51200	
C 100 3_46.2	46.2	61	11700	80	10100	33100	30	12000	41	13300	53100	
C 100 3_53.3	53.3	53	12000	71	9450	36400	26.3	12000	36	13200	56900	
C 100 3_57.4	57.4	49	12000	66	10200	39500	24.4	12000	33	13400	59000	
C 100 3_64.5	64.5	43	12000	59	9950	44100	21.7	12000	29	13400	62300	
C 100 3_69.4	69.4	40	12000	54	10400	45900	20.2	12000	27	13500	64500	
C 100 3_79.4	79.4	35	12000	48	10300	49200	17.6	12000	24	13500	68600	
C 100 3_85.6	85.6	33	12000	44	10400	51100	16.4	12000	22	13600	70900	161
C 100 3_92.7	92.7	30	12000	41	10400	53200	15.1	12000	20	13500	73500	
C 100 3_99.8	99.8	28.1	12000	38	10500	55200	14.0	12000	19.0	13600	75900	
C 100 3_111.9	111.9	25.0	12000	34	10400	58300	12.5	12000	16.9	13500	79800	
C 100 3_120.5	120.5	23.2	12000	31	10500	60400	11.6	12000	15.7	13700	82400	
C 100 3_139.7	139.7	20.0	11050	25	10600	67400	10.0	11050	12.5	13700	85000	
C 100 3_150.4	150.4	18.6	12000	25	10600	66900	9.3	12000	12.6	13700	85000	
C 100 4_162.1	162.1	17.3	12000	24	—	85000	8.6	12000	11.9	—	85000	
C 100 4_185.4	185.4	15.1	12000	21	—	85000	7.6	12000	10.4	—	85000	
C 100 4_199.6	199.6	14.0	12000	19.4	—	85000	7.0	12000	9.7	—	85000	
C 100 4_244.2	244.2	11.5	12000	15.8	—	85000	5.7	12000	7.9	—	85000	
C 100 4_263.0	263.0	10.6	12000	14.7	—	85000	5.3	12000	7.4	—	85000	
C 100 4_300.5	300.5	9.3	12000	12.9	—	85000	4.7	12000	6.4	—	85000	
C 100 4_323.6	323.6	8.7	12000	11.9	—	85000	4.3	12000	6.0	—	85000	
C 100 4_380.5	380.5	7.4	12000	10.2	—	85000	3.7	12000	5.1	—	85000	
C 100 4_409.8	409.8	6.8	12000	9.4	—	85000	3.4	12000	4.7	—	85000	
C 100 4_466.7	466.7	6.0	12000	8.3	—	85000	3.0	12000	4.1	—	85000	
C 100 4_502.6	502.6	5.6	12000	7.7	—	85000	2.8	12000	3.8	—	85000	
C 100 4_582.6	582.6	4.8	12000	6.6	—	85000	2.4	12000	3.3	—	85000	
C 100 4_627.4	627.4	4.5	12000	6.2	—	85000	2.2	12000	3.1	—	85000	
C 100 4_720.3	720.3	3.9	12000	5.4	—	85000	1.9	12000	2.7	—	85000	
C 100 4_775.7	775.7	3.6	12000	5.0	—	85000	1.8	12000	2.5	—	85000	
C 100 4_843.3	843.3	3.3	12000	4.6	—	85000	1.7	12000	2.3	—	85000	
C 100 4_908.2	908.2	3.1	12000	4.3	—	85000	1.5	12000	2.1	830	85000	
C 100 4_1004	1004	2.8	12000	3.9	—	85000	1.4	12000	1.9	—	85000	
C 100 4_1081	1081	2.6	12000	3.6	—	85000	1.3	12000	1.8	870	85000	

(—) Nehmen Sie bitte Kontakt mit unserem Applikationsdienst auf und geben die Querkraftsdaten an (Drehrichtung, Orientierung, Anordnung)

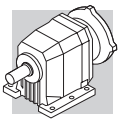

C 100 — 12000 Nm

	i	n_1 = 900 min^{-1}					n_1 = 500 min^{-1}					
		n_2 min^{-1}	M_{n2} Nm	P_{n1} kW	R_{n1} N	R_{n2} N	n_2 min^{-1}	M_{n2} Nm	P_{n1} kW	R_{n1} N	R_{n2} N	
C 100 2_4.9	4.9	183	7800	157	5310	28800	102	9300	104	6720	34400	161
C 100 2_5.3	5.3	169	7950	148	6680	29500	94	9450	98	9740	35200	
C 100 2_6.5	6.5	138	8600	131	5670	31000	77	10250	87	7540	37000	
C 100 2_7.1	7.1	127	8750	123	7050	31800	71	10450	81	10100	37800	
C 100 2_8.4	8.4	108	9350	111	5670	32600	60	10950	72	8530	40100	
C 100 2_9.0	9.0	99	9500	104	7080	33600	55	11350	69	10100	39900	
C 100 2_10.1	10.1	89	10000	98	5540	33600	50	10900	60	10600	44500	
C 100 2_10.9	10.9	82	10150	92	6980	34700	46	11500	58	11300	44300	
C 100 2_12.5	12.5	72	10700	85	3910	35400	40	10850	48	11700	49600	
C 100 2_13.5	13.5	67	10850	80	6440	36700	37	11450	47	12300	49500	
C 100 2_15.2	15.2	59	10800	70	5940	40800	33	10800	39	13000	54700	
C 100 2_16.5	16.5	55	11500	69	6320	39100	30	11500	38	13400	54500	
C 100 2_18.7	18.7	48	10900	58	6310	45100	26.8	10900	32	13400	59800	
C 100 2_20.2	20.2	45	11500	56	6890	45000	24.7	11500	31	14000	60100	
C 100 2_22.2	22.2	40	9850	44	9170	52200	22.5	9850	24	15000	67800	
C 100 2_24.1	24.1	37	10800	44	8930	51200	20.7	10800	25	15000	67200	
C 100 2_29.6	29.6	30	9100	31	12600	61400	16.9	9100	17.0	15000	78300	
C 100 3_34.3	34.3	26.2	11700	35	15000	57800	14.6	11700	19.2	15000	75500	
C 100 3_36.9	36.9	24.4	11800	32	15000	59600	13.5	11800	18.0	15000	77700	
C 100 3_42.9	42.9	21.0	12000	28	15000	63400	11.6	12000	15.7	15000	82300	
C 100 3_46.2	46.2	19.5	12000	26	15000	65600	10.8	12000	14.6	15000	84900	
C 100 3_53.3	53.3	16.9	12000	23	15000	69900	9.4	12000	12.7	15000	85000	
C 100 3_57.4	57.4	15.7	12000	21	15000	72300	8.7	12000	11.8	15000	85000	
C 100 3_64.5	64.5	14.0	12000	18.6	15000	76100	7.8	12000	10.5	15000	85000	
C 100 3_69.4	69.4	13.0	12000	17.5	15000	78600	7.2	12000	9.7	15000	85000	
C 100 3_79.4	79.4	11.3	12000	15.3	15000	83300	6.3	12000	8.5	15000	85000	
C 100 3_85.6	85.6	10.5	12000	14.2	15000	85000	5.8	12000	7.9	15000	85000	
C 100 3_92.7	92.7	9.7	12000	13.1	15000	85000	5.4	12000	7.3	15000	85000	
C 100 3_99.8	99.8	9.0	12000	12.2	15000	85000	5.0	12000	6.8	15000	85000	
C 100 3_111.9	111.9	8.0	12000	10.9	15000	85000	4.5	12000	6.0	15000	85000	
C 100 3_120.5	120.5	7.5	12000	10.1	15000	85000	4.1	12000	5.6	15000	85000	
C 100 3_139.7	139.7	6.4	11500	8.0	15000	85000	3.6	11050	4.5	15000	85000	
C 100 3_150.4	150.4	6.0	12000	8.1	15000	85000	3.3	12000	4.5	15000	85000	
C 100 4_162.1	162.1	5.6	12000	7.7	—	85000	3.1	12000	4.3	—	85000	
C 100 4_185.4	185.4	4.9	12000	6.7	—	85000	2.7	12000	3.7	920	85000	
C 100 4_199.6	199.6	4.5	12000	6.2	—	85000	2.5	12000	3.5	1430	85000	
C 100 4_244.2	244.2	3.7	12000	5.1	—	85000	2.0	12000	2.8	1490	85000	
C 100 4_263.0	263.0	3.4	12000	4.7	—	85000	1.9	12000	2.6	1950	85000	
C 100 4_300.5	300.5	3.0	12000	4.1	—	85000	1.7	12000	2.3	1840	85000	
C 100 4_323.6	323.6	2.8	12000	3.8	850	85000	1.5	12000	2.1	2280	85000	
C 100 4_380.5	380.5	2.4	12000	3.3	700	85000	1.3	12000	1.8	2130	85000	
C 100 4_409.8	409.8	2.2	12000	3.0	1120	85000	1.2	12000	1.7	2550	85000	
C 100 4_466.7	466.7	1.9	12000	2.7	910	85000	1.1	12000	1.5	2340	85000	
C 100 4_502.6	502.6	1.8	12000	2.5	1320	85000	1.0	12000	1.4	2740	85000	
C 100 4_582.6	582.6	1.5	12000	2.1	1100	85000	0.90	12000	1.2	2520	85000	
C 100 4_627.4	627.4	1.4	12000	2.0	1490	85000	0.80	12000	1.1	2910	85000	
C 100 4_720.3	720.3	1.2	12000	1.7	1270	85000	0.70	12000	1.0	2700	85000	
C 100 4_775.7	775.7	1.2	12000	1.6	1650	85000	0.60	12000	0.90	3070	85000	
C 100 4_843.3	843.3	1.1	12000	1.5	1360	85000	0.60	12000	0.80	2790	85000	
C 100 4_908.2	908.2	1.0	12000	1.4	1730	85000	0.60	12000	0.80	3160	85000	
C 100 4_1004	1004	0.90	12000	1.2	1400	85000	0.50	12000	0.70	2830	85000	
C 100 4_1081	1081	0.90	12000	1.1	1770	85000	0.50	12000	0.60	3170	85000	

(—) Nehmen Sie bitte Kontakt mit unserem Applikationsdienst auf und geben die Querkraftsdaten an (Drehrichtung, Orientierung, Anordnung)

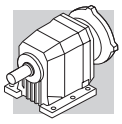

27 BAUMÖGLICHKEITEN

In den Tabellen (B21) und (B22) werden die von den Größen her gesehenen möglichen Passungen angegeben.

Die angemessene Getriebewahl muss unter Befolgung der im Paragraph 11 gegebenen Anleitungen und auf der Grundlage der Auswahltabelle der technischen Daten erfolgen.

(B 21)

		IEC_ BN BE BX (IM B5)																					
		BN		BN	BE	BN	BE	BN	BE	BN	BE	BN	BE	BX	BN	BE	BX	BN	BE	BX	BN	IEC	IEC	IEC
P_{n1}(#) [kW]	2p	0.37	0.75	1.5	1.1	2.2	2.2	4	3	4	4	9.2	9.2	—	18.5	18.5	—	22	—	—	30	45	55	90
	4p	0.25	0.55	1.1	0.75	1.85	1.5	3	3	4	4	9.2	9.2	7.5	15	15	15	22	22	22	30	47	55	90
	6p	0.12	0.37	0.75	—	1.1	0.75	1.85	1.5	2.2	2.2	5.5	4	—	11	7.5	—	15	—	—	18.5	30	37	55
		P63	P71	P80		P90		P100		P112		P132			P160			P180			P200	P225	P250	P280
C 12 2	i =	2.8_66.2		2.8_47.6				2.8_47.6																
C 22 2	i =	3.7_63.3 ⊖ (7.1_8.7)		2.7_54.7				2.7_54.7																
C 22 3	i =	60.0_261.0		60.0_261.0				60.0_261.0																
C 32 2	i =	5.0_66.8 ⊖ (7.2_11.2)		2.9_66.8				2.9_66.8				2.9_25.1												
C 32 3	i =	74.7_274.7		74.7_274.7				74.7_274.7																
C 36 2	i =	4.6_19.0 ⊖ (6.8_10.6)		2.7_19.0				2.7_19.0				2.7_19.0												
C 36 3	i =	38.1_206.4		22.1_206.4				22.1_206.4				22.1_77.6												
C 36 4	i =	230.9_848.5		230.9_848.5				230.9_848.5																
C 41 2	i =	14.2_44.8		2.7_44.8				2.7_44.8				2.7_31.4												
C 41 3	i =	47.0_209.1		28.5_209.1				28.5_209.1				28.5_102.3												
C 41 4	i =	239.9_855.5		239.9_855.5				239.9_855.5																
C 51 2	i =	18.9_57.0		2.6_57.0				2.6_57.0				2.6_40.4			2.6_40.4			2.6_40.4						
C 51 3	i =	59.0_216.7		21.8_216.7				21.8_216.7				21.8_124.4			21.8_124.4			21.8_124.4						
C 51 4	i =	240.9_884.9		240.9_884.9				240.9_884.9				240.9_508.0												
C 61 2	i =	22.4_38.0		3.7_38.0 ⊖ (6.7_7.5)				3.7_38.0 ⊖ (6.7_7.5)				2.8_38.0			2.8_38.0			2.8_38.0						
C 61 3	i =	67.7_195.8		26.8_195.8				26.8_195.8				26.8_140.5			26.8_140.5			26.8_140.5						
C 61 4	i =	217.4_796.1		217.4_796.1				217.4_796.1																
C 70 2	i =			14.1_34.7 ⊖ (15.3)				14.1_34.7 ⊖ (15.3)				7.5_34.7 ⊖ (8.0)			4.6_34.7			4.6_34.7*			4.6_10.2* ⊖ (9.5)			
C 70 3	i =			41.3_239.3				41.3_239.3				41.3_137.4			41.3_137.4			41.3_137.4*						
C 70 4	i =	251.3_1476		251.3_1476				251.3_1476				251.3_554.7												
C 80 2	i =			20.5_39.1				20.5_39.1				11.1_39.1			7.0_39.1			5.6_39.1			5.6_25.9*	5.6_25.9*		
C 80 3	i =			43.5_215.8				43.5_215.8				43.5_184.4			43.5_184.4			43.5_184.4						
C 80 4	i =	334.3_1481		261.9_1481				261.9_1481				261.9_724.7												
C 90 2	i =			22.9_35.1				22.9_35.1				12.8_35.1			10.4_35.1			10.4_35.1			5.2_29.4	5.2_29.4*	5.2_29.4*	
C 90 3	i =			74.4_172.1				74.4_172.1				39.4_172.1			39.4_172.1			39.4_172.1			39.4_96.2	39.4_96.2*	39.4_96.2*	
C 90 4	i =	339.0_1240		212.4_1240				212.4_1240				212.4_712.2			212.4_712.2			212.4_712.2						
C 100 2	i =							29.6				15.2_29.6			12.5_29.6			12.5_29.6			4.9_29.6	4.9_29.6	4.9_29.6*	4.9_29.6*
C 100 3	i =							79.4_150.4				42.9_150.4			34.3_150.4			34.3_150.4			34.3_99.8	34.3_99.8*	34.3_99.8	34.3_99.8*
C 100 4	i =	380.5_1081		162.1_1081				162.1_1081				162.1_775.7			162.1_775.7			162.1_775.7						

(#) P_{n1} = max. installierbare Leistung für IEC Motoradapter P_

Für die Einbaulagen B3, B5 B6, B7, B8 werden die mit * gekennzeichneten Motoren in Bauform B3/ B5 geliefert.

(B 22)

		M0	M05	M1	ME2	ME3	ME4 - MX4	ME5 - MX5
C 05 2	i =	27.1_44.7	5.5_44.7	5.5_44.7				
C 12 2			2.8_66.2	2.8_37.0	2.8_47.7	2.8_47.7		
C 22 2			3.7_63.3 ⛔ (7.1_8.7)	3.7_43.3 ⛔ (7.1_8.7)	2.7_54.7	2.7_54.7		
C 22 3			60.0_261.0	60.0_261.0	60.0_261.0	60.0_261.0		
C 32 2				5.0_52.4 ⛔ (7.2_11.2)	2.9_66.8	2.9_66.8	2.9_25.1	
C 32 3			74.7_274.7	74.7_274.7	74.7_274.7	74.7_274.7		
C 36 2				4.6_19.0 ⛔ (6.8_10.6)	2.7_19.0	2.7_19.0	2.7_19.0	
C 36 3				38.1_162.0	22.1_206.4	22.1_206.4	22.1_77.6	
C 36 4			230.9_848.5	230.9_848.5	230.9_848.5	230.9_848.5		
C 41 2				14.2_44.8	2.7_44.8	2.7_44.8	2.7_31.4	
C 41 3				47.0_209.1	28.5_209.1	28.5_209.1	28.5_102.3	
C 41 4			239.9_855.5	239.9_855.5	239.9_855.5	239.9_855.5		
C 51 2				18.9_57.0	2.6_57.0	2.6_57.0	2.6_40.4	2.6_40.4
C 51 3				59.0_216.7	21.8_216.7	21.8_216.7	21.8_124.4	21.8_124.4
C 51 4				240.9_884.9	240.9_884.9	240.9_884.9	240.9_508.0	
C 61 2					3.7_38.0 ⛔ (6.7_7.5)	3.7_38.0 ⛔ (6.7_7.5)	2.8_38.0	2.8_38.0
C 61 3					26.8_195.8	26.8_195.8	26.8_140.5	26.8_140.5
C 61 4				217.4_796.1	217.4_796.1	217.4_796.1		
C 70 2					14.1_34.7 ⛔ (15.3)	14.1_34.7 ⛔ (15.3)	7.5_34.7 ⛔ (8.0)	7.5_34.7 ⛔ (8.0)
C 70 3					41.3_239.3	41.3_239.3	41.3_137.4	41.3_137.4
C 70 4				251.3_1476	251.3_1476	251.3_1476	251.3_554.7	
C 80 2						20.5_39.1	11.1_39.1	11.1_39.1
C 80 3						43.5_215.8	43.5_184.4	43.5_184.4
C 80 4				334.3_1481	261.9_1481	261.9_1481	261.9_724.7	
C 90 2						22.9_35.1	12.8_35.1	12.8_35.1
C 90 3						74.4_172.1	39.4_172.1	39.4_172.1
C 90 4				339.0_1240	212.4_1240	212.4_1240	212.4_712.2	
C 100 2							15.2_29.6	15.2_29.6
C 100 3							42.9_150.4	42.9_150.4
C 100 4				380.5_1081	162.1_1081	162.1_1081	162.1_775.7	

Für viele Servomotoren der wichtigsten Hersteller stehen passende Motoradapter für die Baugrößen C12…C61 zur Verfügung. Die Abmessungen der Servomotor-Eingänge entnehmen Sie bitte dem Zeichnungsteil der verschiedenen Baugrößen. Der Bezeichnungszusatz **SK** steht für Eingänge mit herkömmlicher Passfedernut. Der Zusatz **SC** bezieht sich stattdessen auf Eingänge mit Klemmvorrichtung

(B 23)

		SERVO INPUT							
		SK60A	SK60B	SK80A	SK80B	SK80C	SK95A	SK95B	SK95C
		SC60A	SC60B	SC80A	SC80B	SC80C	SC95A	SC95B	SC95C
C 12 2		2.8_66.2	2.8_66.2	2.8_66.2		2.8_47.6	2.8_66.2	2.8_47.6	2.8_47.6
C 22 2		3.7_63.3 ⊖ (7.1_8.7)	3.7_63.3 ⊖ (7.1_8.7)	3.7_63.3 ⊖ (7.1_8.7)		2.7_54.7	3.7_63.3 ⊖ (7.1_8.7)	2.7_54.7	2.7_54.7
C 22 3		60.0_261.0	60.0_261.0	60.0_261.0		60.0_261.0	60.0_261.0	60.0_261.0	60.0_261.0
C 32 2		5.0_66.8 ⊖ (7.2_11.2)	5.0_66.8 ⊖ (7.2_11.2)	5.0_66.8 ⊖ (7.2_11.2)		2.9_66.8	5.0_66.8 ⊖ (7.2_11.2)	2.9_66.8	2.9_66.8
C 32 3		74.7_274.7	74.7_274.7	74.7_274.7		74.7_274.7	74.7_274.7	74.7_274.7	74.7_274.7
C 36 2		4.6_19.0 ⊖ (6.8_10.6)	4.6_19.0 ⊖ (6.8_10.6)	4.6_19.0 ⊖ (6.8_10.6)		2.7_19.0	4.6_19.0 ⊖ (6.8_10.6)	2.7_19.0	2.7_19.0
C 36 3		38.1_206.4	38.1_206.4	38.1_206.4		22.1_206.4	38.1_206.4	22.1_206.4	22.1_206.4
C 36 4		230.9_848.5	230.9_848.5	230.9_848.5		230.9_848.5	230.9_848.5	230.9_848.5	230.9_848.5
C 41 2	**i =**				6.0_44.8 ⊖ (6.4_12.4)	2.7_44.8	6.0_44.8 ⊖ (6.4_12.4)	2.7_44.8	2.7_44.8
C 41 3					47.0_209.1	28.5_209.1	47.0_209.1	28.5_209.1	28.5_209.1
C 41 4		239.9_855.5	239.9_855.5	239.9_855.5		239.9_855.5	239.9_855.5	239.9_855.5	239.9_855.5
C 51 2					18.9_57.0	2.6_57.0	18.9_57.0	2.6_57.0	2.6_57.0
C 51 3					59.0_216.7	21.8_216.7	59.0_216.7	21.8_216.7	21.8_216.7
C 51 4						240.9_884.9	240.9_884.9	240.9_884.9	240.9_884.9
C 61 2						3.7_38.0 ⊖ (6.7_7.5)	22.4_38.0	3.7_38.0 ⊖ (6.7_7.5)	3.7_38.0 ⊖ (6.7_7.5)
C 61 3						26.8_195.8	67.7_195.8	26.8_195.8	26.8_195.8
C 61 4					217.4_796.1	217.4_796.1	217.4_796.1	217.4_796.1	217.4_796.1

(B 24)

		SK110A	SK110B	SK130A	SK130B	SK180A	SK180B
		SC110A	SC110B	SC130A	SC130B	SC180A	SC180B
C 12 2		2.8_47.6	2.8_47.6				
C 22 2		2.7_54.7	2.7_54.7				
C 22 3		60.0_261.0	60.0_261.0				
C 32 2		2.9_66.8	2.9_66.8	2.9_66.8			
C 32 3		74.7_274.7	74.7_274.7				
C 36 2		2.7_19.0	2.7_19.0	2.7_19.0			
C 36 3		22.1_206.4	22.1_206.4	22.1_206.4			
C 36 4		230.9_848.5	230.9_848.5				
C 41 2	**i =**	2.7_44.8	2.7_44.8	2.7_44.8	2.7_31.4	2.7_31.4	2.7_31.4
C 41 3		28.5_209.1	28.5_209.1	28.5_209.1	28.5_102.3	28.5_102.3	28.5_102.3
C 41 4		239.9_855.5	239.9_855.5				
C 51 2		2.6_57.0	2.6_57.0	2.6_57.0	2.6_40.4	2.6_40.4	2.6_40.4
C 51 3		21.8_216.7	21.8_216.7	21.8_216.7	21.8_124.4	21.8_124.4	21.8_124.4
C 51 4		240.9_884.9	240.9_884.9	240.9_884.9			
C 61 2		3.7_38.0 ⊖ (6.7_7.5)	3.7_38.0 ⊖ (6.7_7.5)	3.7_38.0 ⊖ (6.7_7.5)	2.8_38.0	2.8_38.0	2.8_38.0
C 61 3		26.8_195.8	26.8_195.8	26.8_195.8	26.8_140.5	26.8_140.5	26.8_140.5
C 61 4		217.4_796.1	217.4_796.1	217.4_796.1			

28 TRÄGHEITSMOMENT

Die In den folgenden Tabellen angegebenen Trägheitsmomente Jr [kgm²] beziehen sich auf die Getriebeantriebsachse. Um das Lesen der Tabellen zu erleichtern, werden folgende Symbole verwendet:

	Daten beziehen sich auf Kompaktgetriebe ohne Motor. Um das Gesamtträgheitsmoment des Getriebemotors zu ermitteln, muss nur das Trägheitsmoment des Getriebes mit dem Trägheitsmoment des entsprechenden Motors addiert werden (Wert Elektromotorenauswahltabellen entnehmen).

IEC	Nur Getriebe vorbereitet für IEC-Motor (IEC-Größe...).
	Dieses Symbol bezieht sich auf Getriebewerte.
SERVO	Nur Getriebe vorbereitet für Servomotor.

C 05

	i	J (•10^{-4}) [kgm²]
C 05_5.5	5.5	0.29
C 05_6.7	6.7	0.29
C 05_7.4	7.4	0.28
C 05_9.3	9.3	0.17
C 05_11.2	11.2	0.16
C 05_12.5	12.5	0.16
C 05_15.6	15.6	0.09
C 05_18.9	18.9	0.09
C 05_21.0	21.0	0.08
C 05_27.1	27.1	0.04
C 05_32.8	32.8	0.04
C 05_36.4	36.4	0.04
C 05_40.3	40.3	0.03
C 05_44.7	44.7	0.03

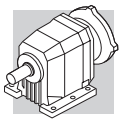

C 12

	i	J (•10-4) [kgm2]							
			IEC						
			63	71	80	90	100	112	
C 12 2_2.8	2.8	0.44	1.9	1.9	3.3	3.2	4.5	4.5	1.3
C 12 2_3.2	3.2	0.34	1.8	1.8	3.2	3.1	4.4	4.4	1.2
C 12 2_3.7	3.7	0.29	1.8	1.7	3.1	3.1	4.4	4.4	1.2
C 12 2_4.3	4.3	0.21	1.7	1.7	3.1	3.0	4.3	4.3	1.1
C 12 2_4.9	4.9	0.19	1.7	1.7	3.0	3.0	4.3	4.3	1.1
C 12 2_5.6	5.6	0.15	1.6	1.6	3.0	2.9	4.2	4.2	1.0
C 12 2_6.2	6.2	0.12	1.6	1.6	3.0	2.9	4.2	4.2	1.0
C 12 2_7.6	7.6	0.33	1.8	1.8	3.2	3.1	4.4	4.4	1.2
C 12 2_8.8	8.8	0.32	1.8	1.8	3.2	3.1	4.4	4.4	1.2
C 12 2_10.1	10.1	0.23	1.7	1.7	3.1	3.0	4.3	4.3	1.1
C 12 2_11.9	11.9	0.17	1.6	1.6	3.0	3.0	4.2	4.2	1.1
C 12 2_13.4	13.4	0.16	1.6	1.6	3.0	2.9	4.2	4.2	1.1
C 12 2_15.4	15.4	0.12	1.6	1.6	3.0	2.9	4.2	4.2	1.0
C 12 2_17.2	17.2	0.10	1.6	1.6	2.9	2.9	4.2	4.2	1.0
C 12 2_18.4	18.4	0.08	1.6	1.5	2.9	2.9	4.2	4.2	0.98
C 12 2_20.6	20.6	0.08	1.5	1.5	2.9	2.9	4.2	4.2	0.98
C 12 2_23.2	23.2	0.07	1.5	1.5	2.9	2.9	4.1	4.1	0.97
C 12 2_25.4	25.4	0.06	1.5	1.5	2.9	2.8	4.1	4.1	0.96
C 12 2_29.5	29.5	0.05	1.5	1.5	2.9	2.8	4.1	4.1	0.95
C 12 2_32.8	32.8	0.04	1.5	1.5	2.9	2.8	4.1	4.1	0.94
C 12 2_37.0	37.0	0.03	1.5	1.5	2.9	2.8	4.1	4.1	0.93
C 12 2_42.3	42.3	0.03	1.5	1.5	2.9	2.8	4.1	4.1	0.93
C 12 2_47.6	47.6	0.02	1.5	1.5	2.9	2.8	4.1	4.1	0.92
C 12 2_55.2	55.2	0.02	1.5	1.5	—	—	—	—	0.92
C 12 2_66.2	66.2	0.01	1.5	1.5	—	—	—	—	0.91

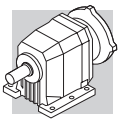

C 12

	i	J (•10-4) [kgm2]									
		SERVO									
		60A		60B 80A		95A		80C 95B 110A		95C 110B	
		SK	SC	SK	SC	SK	SC	SK	SC	SK	SC
C 12 2_2.8	2.8	0.71	0.97	0.73	1.2	3.3	3.7	3.3	3.8	3.2	4.2
C 12 2_3.2	3.2	0.61	0.87	0.63	1.1	3.2	3.6	3.2	3.7	3.1	4.1
C 12 2_3.7	3.7	0.56	0.82	0.58	1.0	3.1	3.5	3.1	3.6	3.1	4.1
C 12 2_4.3	4.3	0.48	0.74	0.50	0.94	3.0	3.5	3.1	3.6	3.0	4.0
C 12 2_4.9	4.9	0.46	0.72	0.48	0.92	3.0	3.4	3.0	3.5	3.0	4.0
C 12 2_5.6	5.6	0.42	0.68	0.44	0.88	3.0	3.4	3.0	3.5	2.9	3.9
C 12 2_6.2	6.2	0.39	0.65	0.41	0.85	2.9	3.4	3.0	3.5	2.9	3.9
C 12 2_7.6	7.6	0.60	0.86	0.62	1.1	3.2	3.6	3.2	3.7	3.1	4.1
C 12 2_8.8	8.8	0.59	0.85	0.61	1.0	3.1	3.6	3.2	3.7	3.1	4.1
C 12 2_10.1	10.1	0.50	0.76	0.52	0.96	3.1	3.5	3.1	3.6	3.0	4.0
C 12 2_11.9	11.9	0.44	0.70	0.46	0.90	3.0	3.4	3.0	3.5	3.0	4.0
C 12 2_13.4	13.4	0.43	0.69	0.45	0.83	3.0	3.4	3.0	3.5	2.9	3.9
C 12 2_15.4	15.4	0.39	0.65	0.41	0.85	2.9	3.4	3.0	3.5	2.9	3.9
C 12 2_17.2	17.2	0.37	0.63	0.39	0.83	2.9	3.4	2.9	3.4	2.9	3.9
C 12 2_18.4	18.4	0.35	0.61	0.37	0.81	2.9	3.3	2.9	3.4	2.9	3.9
C 12 2_20.6	20.6	0.35	0.61	0.37	0.81	2.9	3.3	2.9	3.4	2.9	3.9
C 12 2_23.2	23.2	0.34	0.60	0.36	0.80	2.9	3.3	2.9	3.4	2.9	3.9
C 12 2_25.4	25.4	0.33	0.59	0.35	0.79	2.9	3.3	2.9	3.4	2.8	3.8
C 12 2_29.5	29.5	0.32	0.58	0.34	0.78	2.9	3.3	2.9	3.4	2.8	3.8
C 12 2_32.8	32.8	0.34	0.60	0.33	0.77	2.9	3.3	2.9	3.4	2.8	3.8
C 12 2_37.0	37.0	0.30	0.56	0.32	0.76	2.9	3.3	2.9	3.4	2.8	3.8
C 12 2_42.3	42.3	0.30	0.56	0.32	0.76	2.9	3.3	2.9	3.4	2.8	3.8
C 12 2_47.6	47.6	0.29	0.55	0.31	0.75	2.8	3.3	2.9	3.4	2.8	3.8
C 12 2_55.2	55.2	0.29	0.55	0.31	0.75	2.8	3.3	—	—	—	—
C 12 2_66.2	66.2	0.28	0.54	0.30	0.74	2.8	3.3	—	—	—	—

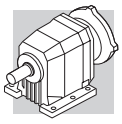

C 22

	i	J (•10-4) [kgm2]							
			IEC						
			63	71	80	90	100	112	
C 22 2_2.7	2.7	1.2	—	—	4.0	4.0	5.3	5.3	3.1
C 22 2_3.3	3.3	0.83	—	—	3.7	3.6	4.9	4.9	2.7
C 22 2_3.7	3.7	0.72	2.2	2.2	3.6	3.5	4.8	4.8	2.6
C 22 2_4.3	4.3	0.56	2.0	2.0	3.4	3.3	4.6	4.6	2.4
C 22 2_4.8	4.8	0.48	2.0	1.9	3.3	3.3	4.6	4.6	2.4
C 22 2_5.6	5.6	0.36	1.8	1.8	3.2	3.2	4.4	4.4	2.2
C 22 2_6.1	6.1	0.29	1.8	1.7	3.1	3.1	4.4	4.4	2.2
C 22 2_7.1	7.1	0.77	—	—	3.6	3.6	4.8	4.8	2.6
C 22 2_8.7	8.7	0.55	—	—	3.4	3.3	4.6	4.6	2.4
C 22 2_9.6	9.6	0.50	2.0	2.0	3.3	3.3	4.6	4.6	2.4
C 22 2_11.1	11.1	0.39	1.9	1.8	3.2	3.2	4.5	4.5	2.3
C 22 2_12.4	12.4	0.35	1.8	1.8	3.2	3.1	4.4	4.4	2.2
C 22 2_14.5	14.5	0.36	1.7	1.7	3.1	3.1	4.3	4.3	2.1
C 22 2_15.8	15.8	0.20	1.7	1.7	3.1	3.0	4.3	4.3	2.1
C 22 2_18.1	18.1	0.18	1.6	1.6	3.0	3.0	4.3	4.3	2.0
C 22 2_20.0	20.0	0.15	1.6	1.6	3.0	2.9	4.2	4.2	2.0
C 22 2_21.5	21.5	0.13	1.6	1.6	3.0	2.9	4.2	4.2	2.0
C 22 2_24.3	24.3	0.12	1.6	1.6	3.0	2.9	4.2	4.2	2.0
C 22 2_27.2	27.2	0.10	1.6	1.6	3.0	2.9	4.2	4.2	2.0
C 22 2_29.6	29.6	0.09	1.6	1.5	2.9	2.9	4.2	4.2	2.0
C 22 2_33.1	33.1	0.07	1.5	1.5	2.9	2.9	4.2	4.2	1.9
C 22 2_36.8	36.8	0.06	1.5	1.5	2.9	2.8	4.1	4.1	1.9
C 22 2_43.3	43.3	0.05	1.5	1.5	2.9	2.8	4.1	4.1	1.9
C 22 2_48.6	48.6	0.04	1.5	1.5	2.9	2.8	4.1	4.1	1.9
C 22 2_54.7	54.7	0.03	1.5	1.5	2.9	2.8	4.1	4.1	1.9
C 22 2_63.3	63.3	0.02	1.5	1.5	—	—	—	—	1.9
C 22 3_60.0	60.0	0.04	1.5	1.5	2.9	2.8	4.1	4.1	0.94
C 22 3_65.3	65.3	0.03	1.5	1.5	2.9	2.8	4.1	4.1	0.93
C 22 3_74.8	74.8	0.03	1.5	1.5	2.9	2.8	4.1	4.1	0.93
C 22 3_82.6	82.6	0.03	1.5	1.5	2.9	2.8	4.1	4.1	0.93
C 22 3_88.5	88.5	0.03	1.5	1.5	2.9	2.8	4.1	4.1	0.93
C 22 3_100.2	100.2	0.03	1.5	1.5	2.9	2.8	4.1	4.1	0.93
C 22 3_112.0	112.0	0.03	1.5	1.5	2.9	2.8	4.1	4.1	0.93
C 22 3_122.2	122.2	0.03	1.5	1.5	2.9	2.8	4.1	4.1	0.93
C 22 3_136.5	136.5	0.02	1.5	1.5	2.9	2.8	4.1	4.1	0.92
C 22 3_151.7	151.7	0.02	1.5	1.5	2.9	2.8	4.1	4.1	0.92
C 22 3_178.5	178.5	0.02	1.5	1.5	2.9	2.8	4.1	4.1	0.92
C 22 3_200.7	200.7	0.02	1.5	1.5	2.9	2.8	4.1	4.1	0.92
C 22 3_225.8	225.8	0.02	1.5	1.5	2.9	2.8	4.1	4.1	0.92
C 22 3_261.0	261.0	0.02	1.5	1.5	2.9	2.8	4.1	4.1	0.92

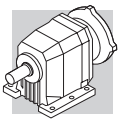

C 22

	i	J (•10-4) [kgm2]									
		SERVO									
		60A		60B 80A		95A		80C 95B 110A		95C 110B	
		SK	SC	SK	SC	SK	SC	SK	SC	SK	SC
C 22 2_2.7	2.7	—	—	—	—	—	—	4.0	4.5	4.0	5.0
C 22 2_3.3	3.3	—	—	—	—	—	—	3.7	4.2	3.6	4.6
C 22 2_3.7	3.7	0.99	1.3	1.0	1.4	3.5	4.0	3.6	4.1	3.5	4.5
C 22 2_4.3	4.3	0.83	1.1	0.85	1.3	3.4	3.8	3.4	3.9	3.3	4.3
C 22 2_4.8	4.8	0.75	1.0	0.77	1.2	3.3	3.7	3.3	3.8	3.3	4.3
C 22 2_5.6	5.6	0.63	0.89	0.65	1.1	3.2	3.6	3.2	3.7	3.2	4.2
C 22 2_6.1	6.1	0.56	0.82	0.58	1.0	3.1	3.5	3.1	3.6	3.1	4.1
C 22 2_7.1	7.1	—	—	—	—	—	—	3.6	4.1	3.6	4.6
C 22 2_8.7	8.7	—	—	—	—	—	—	3.4	3.9	3.3	4.3
C 22 2_9.6	9.6	0.77	1.0	0.79	1.2	3.3	3.8	3.3	3.8	3.3	4.3
C 22 2_11.1	11.1	0.66	0.92	0.68	1.1	3.2	3.6	3.2	3.7	3.2	4.2
C 22 2_12.4	12.4	0.62	0.88	0.64	1.1	3.2	3.6	3.2	3.7	3.1	4.1
C 22 2_14.5	14.5	0.63	0.89	0.65	1.1	3.2	3.6	3.1	3.6	3.1	4.1
C 22 2_15.8	15.8	0.47	0.73	0.49	0.93	3.0	3.5	3.1	3.6	3.0	4.0
C 22 2_18.1	18.1	0.45	0.71	0.47	0.91	3.0	3.4	3.0	3.5	3.0	4.0
C 22 2_20.0	20.0	0.42	0.68	0.44	0.88	3.0	3.4	3.0	3.5	2.9	3.9
C 22 2_21.5	21.5	0.40	0.66	0.42	0.86	3.0	3.4	3.0	3.5	2.9	3.9
C 22 2_24.3	24.3	0.39	0.65	0.41	0.85	2.9	3.4	3.0	3.5	2.9	3.9
C 22 2_27.2	27.2	0.37	0.63	0.39	0.83	2.9	3.4	3.0	3.5	2.9	3.9
C 22 2_29.6	29.6	0.36	0.62	0.38	0.82	2.9	3.3	2.9	3.4	2.9	3.9
C 22 2_33.1	33.1	0.34	0.60	0.36	0.80	2.9	3.3	2.9	3.4	2.9	3.9
C 22 2_36.8	36.8	0.33	0.59	0.35	0.79	2.9	3.3	2.9	3.4	2.8	3.8
C 22 2_43.3	43.3	0.32	0.58	0.34	0.78	2.9	3.3	2.9	3.4	2.8	3.8
C 22 2_48.6	48.6	0.31	0.57	0.33	0.77	2.9	3.3	2.9	3.4	2.8	3.8
C 22 2_54.7	54.7	0.30	0.56	0.32	0.76	2.9	3.3	2.9	3.4	2.8	3.8
C 22 2_63.3	63.3	0.29	0.55	0.31	0.75	2.8	3.3	—	—	—	—
C 22 3_60.0	60.0	0.31	0.57	0.33	0.77	2.9	3.3	2.9	3.4	2.8	3.8
C 22 3_65.3	65.3	0.30	0.56	0.32	0.76	2.9	3.3	2.9	3.4	2.8	3.8
C 22 3_74.8	74.8	0.30	0.56	0.32	0.76	2.9	3.3	2.9	3.4	2.8	3.8
C 22 3_82.6	82.6	0.30	0.56	0.32	0.76	2.9	3.3	2.9	3.4	2.8	3.8
C 22 3_88.5	88.5	0.30	0.56	0.32	0.76	2.9	3.3	2.9	3.4	2.8	3.8
C 22 3_100.2	100.2	0.30	0.56	0.32	0.76	2.9	3.3	2.9	3.4	2.8	3.8
C 22 3_112.0	112.0	0.30	0.56	0.32	0.76	2.9	3.3	2.9	3.4	2.8	3.8
C 22 3_122.2	122.2	0.30	0.56	0.32	0.76	2.9	3.3	2.9	3.4	2.8	3.8
C 22 3_136.5	136.5	0.29	0.55	0.31	0.75	2.8	3.3	2.9	3.4	2.8	3.8
C 22 3_151.7	151.7	0.29	0.55	0.31	0.75	2.8	3.3	2.9	3.4	2.8	3.8
C 22 3_178.5	178.5	0.29	0.55	0.31	0.75	2.8	3.3	2.9	3.4	2.8	3.8
C 22 3_200.7	200.7	0.29	0.55	0.31	0.75	2.8	3.3	2.9	3.4	2.8	3.8
C 22 3_225.8	225.8	0.29	0.55	0.31	0.75	2.8	3.3	2.9	3.4	2.8	3.8
C 22 3_261.0	261.0	0.29	0.55	0.31	0.75	2.8	3.3	2.9	3.4	2.8	3.8

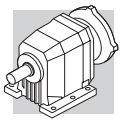

C 32

	i	J (•10-4) [kgm2]								
			IEC							
			63	71	80	90	100	112	132	
C 32 2_2.9	2.9	2.3	—	—	5.2	5.1	6.4	6.4	20	4.6
C 32 2_3.4	3.4	1.8	—	—	4.6	4.6	5.9	5.9	20	4.0
C 32 2_3.7	3.7	1.6	—	—	4.4	4.3	5.6	5.6	20	3.8
C 32 2_4.5	4.5	1.2	—	—	4.0	4.0	5.2	5.2	19	3.4
C 32 2_5.0	5.0	0.87	2.3	2.3	3.7	3.7	5.0	5.0	19	3.1
C 32 2_5.7	5.7	0.82	2.3	2.3	3.7	3.6	4.9	4.9	19	3.0
C 32 2_6.3	6.3	0.63	2.1	2.1	3.5	3.4	4.7	4.7	18	2.8
C 32 2_7.2	7.2	1.5	—	—	4.4	4.3	5.6	5.6	19	3.7
C 32 2_8.5	8.5	1.2	—	—	4.1	4.0	5.3	5.3	19	3.4
C 32 2_9.3	9.3	1.1	—	—	3.9	3.9	5.1	5.1	19	3.3
C 32 2_11.2	11.2	0.83	—	—	3.7	3.6	4.9	4.9	19	3.0
C 32 2_12.3	12.3	0.60	2.1	2.1	3.4	3.4	4.7	4.7	18	2.8
C 32 2_14.1	14.1	0.61	2.1	2.1	3.5	3.4	4.7	4.7	18	2.8
C 32 2_15.6	15.6	0.46	1.9	1.9	3.3	3.2	4.5	4.5	18	2.7
C 32 2_18.2	18.2	0.42	1.9	1.9	3.3	3.2	4.5	4.5	18	2.6
C 32 2_20.1	20.1	0.34	1.8	1.8	3.2	3.1	4.4	4.4	18	2.6
C 32 2_22.9	22.9	0.31	1.8	1.8	3.2	3.1	4.4	4.4	17	2.5
C 32 2_25.1	25.1	0.25	1.7	1.7	3.1	3.0	4.3	4.3	17	2.5
C 32 2_26.9	26.9	0.24	1.7	1.7	3.1	3.0	4.3	4.3	—	2.5
C 32 2_29.8	29.8	0.19	1.7	1.7	3.0	3.0	4.3	4.3	—	2.4
C 32 2_33.1	33.1	0.19	1.7	1.7	3.0	3.0	4.3	4.3	—	2.4
C 32 2_36.1	36.1	0.14	1.6	1.6	3.0	2.9	4.2	4.2	—	2.4
C 32 2_40.7	40.7	0.14	1.6	1.6	3.0	2.9	4.2	4.2	—	2.4
C 32 2_45.3	45.3	0.10	1.6	1.6	3.0	2.9	4.2	4.2	—	2.3
C 32 2_52.4	52.4	0.08	1.6	1.6	2.9	2.9	4.2	4.2	—	2.3
C 32 2_59.4	59.4	0.07	1.5	1.5	2.9	2.9	4.2	4.2	—	2.3
C 32 2_66.8	66.8	0.05	1.5	1.5	2.9	2.8	4.1	4.1	—	2.3
C 32 3_74.7	74.7	0.06	1.5	1.5	2.9	2.9	4.1	4.1	—	0.96
C 32 3_82.6	82.6	0.06	1.5	1.5	2.9	2.8	4.1	4.1	—	0.96
C 32 3_94.2	94.2	0.06	1.5	1.5	2.9	2.8	4.1	4.1	—	0.96
C 32 3_103.3	103.3	0.05	1.5	1.5	2.9	2.8	4.1	4.1	—	0.95
C 32 3_110.6	110.6	0.05	1.5	1.5	2.9	2.8	4.1	4.1	—	0.95
C 32 3_122.4	122.4	0.05	1.5	1.5	2.9	2.8	4.1	4.1	—	0.95
C 32 3_136.0	136.0	0.05	1.5	1.5	2.9	2.8	4.1	4.1	—	0.95
C 32 3_148.4	148.4	0.05	1.5	1.5	2.9	2.8	4.1	4.1	—	0.95
C 32 3_167.4	167.4	0.05	1.5	1.5	2.9	2.8	4.1	4.1	—	0.95
C 32 3_186.0	186.0	0.04	1.5	1.5	2.9	2.8	4.1	4.1	—	0.94
C 32 3_215.6	215.6	0.04	1.5	1.5	2.9	2.8	4.1	4.1	—	0.94
C 32 3_244.2	244.2	0.04	1.5	1.5	2.9	2.8	4.1	4.1	—	0.94
C 32 3_274.7	274.7	0.04	1.5	1.5	2.9	2.8	4.1	4.1	—	0.94

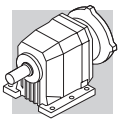

C 32

	i	J (•10-4) [kgm2]											
		SERVO											
		60A		60B 80A		95A		80C 95B 110A		95C 110B		130A	
		SK	SC	SK	SC	SK	SC	SK	SC	SK	SC	SK	SC
C 32 2_2.9	2.9	—	—	—	—	—	—	5.2	5.7	5.1	6.1	5.1	6.1
C 32 2_3.4	3.4	—	—	—	—	—	—	4.6	5.1	4.6	5.6	4.6	5.6
C 32 2_3.7	3.7	—	—	—	—	—	—	4.4	4.9	4.3	5.3	4.3	5.3
C 32 2_4.5	4.5	—	—	—	—	—	—	4.0	4.5	4.0	5.0	4.0	5.0
C 32 2_5.0	5.0	1.1	1.4	1.2	1.6	3.7	4.1	3.7	4.2	3.7	4.7	3.7	4.7
C 32 2_5.7	5.7	1.1	1.4	1.1	1.5	3.6	4.1	3.7	4.2	3.6	4.6	3.6	4.6
C 32 2_6.3	6.3	0.90	1.2	0.92	1.4	3.5	3.9	3.5	4.0	3.4	4.4	3.4	4.4
C 32 2_7.2	7.2	—	—	—	—	—	—	4.4	4.9	4.3	5.3	4.3	5.3
C 32 2_8.5	8.5	—	—	—	—	—	—	4.1	4.6	4.0	5.0	4.0	5.0
C 32 2_9.3	9.3	—	—	—	—	—	—	3.9	4.4	3.9	4.9	3.9	4.9
C 32 2_11.2	11.2	—	—	—	—	—	—	3.7	4.2	3.6	4.6	3.6	4.6
C 32 2_12.3	12.3	0.87	1.1	0.89	1.3	3.4	3.9	3.4	3.9	3.4	4.4	3.4	4.4
C 32 2_14.1	14.1	0.88	1.1	0.90	1.3	3.4	3.9	3.5	4.0	3.4	4.4	3.4	4.4
C 32 2_15.6	15.6	0.73	0.99	0.75	1.2	3.3	3.7	3.3	3.8	3.2	4.2	3.2	4.2
C 32 2_18.2	18.2	0.69	0.95	0.71	1.1	3.2	3.7	3.3	3.8	3.2	4.2	3.2	4.2
C 32 2_20.1	20.1	0.61	0.87	0.63	1.1	3.2	3.6	3.2	3.7	3.1	4.1	3.1	4.1
C 32 2_22.9	22.9	0.58	0.84	0.60	1.0	3.1	3.6	3.2	3.7	3.1	4.1	3.1	4.1
C 32 2_25.1	25.1	0.52	0.78	0.54	0.98	3.1	3.5	3.1	3.6	3.0	4.0	3.0	4.0
C 32 2_26.9	26.9	0.51	0.77	0.53	0.97	3.1	3.5	3.1	3.6	3.0	4.0	3.0	4.0
C 32 2_29.8	29.8	0.46	0.72	0.48	0.92	3.0	3.4	3.0	3.5	3.0	4.0	3.0	4.0
C 32 2_33.1	33.1	0.46	0.72	0.48	0.92	3.0	3.4	3.0	3.5	3.0	4.0	3.0	4.0
C 32 2_36.1	36.1	0.41	0.67	0.43	0.87	3.0	3.4	3.0	3.5	2.9	3.9	2.9	3.9
C 32 2_40.7	40.7	0.41	0.67	0.43	0.87	3.0	3.4	3.0	3.5	2.9	3.9	2.9	3.9
C 32 2_45.3	45.3	0.37	0.63	0.39	0.83	2.9	3.4	3.0	3.5	2.9	3.9	2.9	3.9
C 32 2_52.4	52.4	0.35	0.61	0.37	0.81	2.9	3.3	2.9	3.4	2.9	3.9	2.9	3.9
C 32 2_59.4	59.4	0.34	0.60	0.36	0.80	2.9	3.3	2.9	3.4	2.9	3.9	2.9	3.9
C 32 2_66.8	66.8	0.32	0.58	0.34	0.78	2.9	3.3	2.9	3.4	2.8	3.8	2.8	3.8
C 32 3_74.7	74.7	0.33	0.59	0.35	0.79	2.9	3.3	2.9	3.4	2.9	3.9	—	—
C 32 3_82.6	82.6	0.33	0.59	0.35	0.79	2.9	3.3	2.9	3.4	2.8	3.8	—	—
C 32 3_94.2	94.2	0.33	0.59	0.35	0.79	2.9	3.3	2.9	3.4	2.8	3.8	—	—
C 32 3_103.3	103.3	0.32	0.58	0.34	0.78	2.9	3.3	2.9	3.4	2.8	3.8	—	—
C 32 3_110.6	110.6	0.32	0.58	0.34	0.78	2.9	3.3	2.9	3.4	2.8	3.8	—	—
C 32 3_122.4	122.4	0.32	0.58	0.34	0.78	2.9	3.3	2.9	3.4	2.8	3.8	—	—
C 32 3_136.0	136.0	0.32	0.58	0.34	0.78	2.9	3.3	2.9	3.4	2.8	3.8	—	—
C 32 3_148.4	148.4	0.32	0.58	0.34	0.78	2.9	3.3	2.9	3.4	2.8	3.8	—	—
C 32 3_167.4	167.4	0.32	0.58	0.34	0.78	2.9	3.3	2.9	3.4	2.8	3.8	—	—
C 32 3_186.0	186.0	0.31	0.57	0.33	0.77	2.9	3.3	2.9	3.4	2.8	3.8	—	—
C 32 3_215.6	215.6	0.31	0.57	0.33	0.77	2.9	3.3	2.9	3.4	2.8	3.8	—	—
C 32 3_244.2	244.2	0.31	0.57	0.33	0.77	2.9	3.3	2.9	3.4	2.8	3.8	—	—
C 32 3_274.7	274.7	0.31	0.57	0.33	0.77	2.9	3.3	2.9	3.4	2.8	3.8	—	—

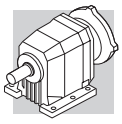

C 36

	i	J (•10-4) [kgm2]								
			IEC							
			63	71	80	90	100	112	132	
C 36 2_2.7	2.7	3.6	—	—	6.5	6.4	7.7	7.7	22	14
C 36 2_3.2	3.2	2.5	—	—	5.4	5.3	6.6	6.6	21	13
C 36 2_3.5	3.5	2.4	—	—	5.3	5.2	6.5	6.5	20	13
C 36 2_4.2	4.2	1.6	—	—	4.5	4.4	5.7	5.7	20	12
C 36 2_4.6	4.6	1.5	3.0	3.0	4.4	4.3	5.6	5.6	19	12
C 36 2_5.3	5.3	1.1	2.6	2.6	4.0	3.9	5.2	5.2	19	12
C 36 2_5.8	5.8	0.98	2.5	2.5	3.9	3.8	5.1	5.1	19	12
C 36 2_6.8	6.8	2.2	—	—	5.1	5.0	6.3	6.3	20	13
C 36 2_8.0	8.0	1.6	—	—	4.4	4.3	5.6	5.6	20	12
C 36 2_8.8	8.8	1.5	—	—	4.4	4.3	5.6	5.6	19	12
C 36 2_10.6	10.6	1.1	—	—	3.9	3.8	5.1	5.1	19	12
C 36 2_11.7	11.7	1.0	2.5	2.5	3.9	3.8	5.1	5.1	19	12
C 36 2_13.3	13.3	0.69	2.2	2.2	3.6	3.5	4.8	4.8	19	11
C 36 2_14.8	14.8	0.68	2.2	2.2	3.6	3.5	4.8	4.8	19	11
C 36 2_17.2	17.2	0.47	2.0	2.0	3.4	3.3	4.6	4.6	18	11
C 36 2_19.0	19.0	0.47	2.0	2.0	3.4	3.3	4.6	4.6	18	11
C 36 3_22.1	22.1	1.8	—	—	4.7	4.6	5.9	5.9	19	12
C 36 3_26.2	26.2	1.3	—	—	4.2	4.1	5.4	5.4	19	12
C 36 3_28.7	28.7	1.3	—	—	4.2	4.1	5.4	5.4	19	12
C 36 3_34.6	34.6	0.88	—	—	3.8	3.7	5.0	5.0	19	11
C 36 3_38.1	38.1	0.90	2.4	2.4	3.8	3.7	5.0	5.0	19	11
C 36 3_43.5	43.5	0.59	2.1	2.1	3.5	3.4	4.7	4.7	19	11
C 36 3_48.2	48.2	0.60	2.1	2.1	3.5	3.4	4.7	4.7	19	11
C 36 3_56.2	56.2	0.41	1.9	1.9	3.3	3.2	4.5	4.5	18	11
C 36 3_62.0	62.0	0.42	1.9	1.9	3.3	3.2	4.5	4.5	18	11
C 36 3_70.8	70.8	0.30	1.8	1.8	3.2	3.1	4.4	4.4	18	11
C 36 3_77.6	77.6	0.28	1.8	1.8	3.2	3.1	4.4	4.4	17	11
C 36 3_83.1	83.1	0.24	1.7	1.7	3.1	3.0	4.3	4.3	—	11
C 36 3_91.9	91.9	0.21	1.7	1.7	3.1	3.0	4.3	4.3	—	11
C 36 3_102.2	102.2	0.19	1.7	1.7	3.1	3.0	4.3	4.3	—	11
C 36 3_111.5	111.5	0.16	1.7	1.7	3.1	3.0	4.3	4.3	—	11
C 36 3_125.8	125.8	0.14	1.6	1.6	3.0	2.9	4.2	4.2	—	11
C 36 3_139.8	139.8	0.11	1.6	1.6	3.0	2.9	4.2	4.2	—	11
C 36 3_162.0	162.0	0.09	1.6	1.6	3.0	2.9	4.2	4.2	—	11
C 36 3_183.5	183.5	0.07	1.6	1.6	3.0	2.9	4.2	4.2	—	11
C 36 3_206.4	206.4	0.06	1.6	1.6	3.0	2.9	4.2	4.2	—	11
C 36 4_230.9	230.9	0.08	—	—	—	—	—	—	—	—
C 36 4_255.0	255.0	0.08	1.6	1.6	3.0	2.9	4.2	4.2	—	0.90
C 36 4_290.9	290.9	0.07	1.6	1.6	3.0	2.9	4.2	4.2	—	0.89
C 36 4_318.9	318.9	0.07	1.6	1.6	3.0	2.9	4.2	4.2	—	0.89
C 36 4_341.7	341.7	0.07	1.6	1.6	3.0	2.9	4.2	4.2	—	0.89
C 36 4_377.9	377.9	0.07	1.6	1.6	3.0	2.9	4.2	4.2	—	0.89
C 36 4_420.2	420.2	0.06	1.6	1.6	3.0	2.9	4.2	4.2	—	0.88
C 36 4_458.4	458.4	0.06	1.6	1.6	3.0	2.9	4.2	4.2	—	0.88
C 36 4_517.2	517.2	0.06	1.6	1.6	3.0	2.9	4.2	4.2	—	0.88
C 36 4_574.7	574.7	0.06	1.6	1.6	3.0	2.9	4.2	4.2	—	0.88
C 36 4_665.9	665.9	0.06	1.6	1.6	3.0	2.9	4.2	4.2	—	0.88
C 36 4_754.2	754.2	0.06	1.6	1.6	3.0	2.9	4.2	4.2	—	0.88
C 36 4_848.5	848.5	0.06	1.6	1.6	3.0	2.9	4.2	4.2	—	0.88

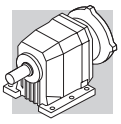

C 36

	i	J (•10-4) [kgm2]											
		SERVO											
		60A		60B 80A		95A		80C 95B 110A		95C 110B		130A	
		SK	SC	SK	SC	SK	SC	SK	SC	SK	SC	SK	SC
C 36 2_2.7	2.7	—	—	—	—	—	—	6.5	7.0	6.4	7.4	6.4	7.4
C 36 2_3.2	3.2	—	—	—	—	—	—	5.4	5.9	5.3	6.3	5.3	6.3
C 36 2_3.5	3.5	—	—	—	—	—	—	5.3	5.8	5.2	6.2	5.2	6.2
C 36 2_4.2	4.2	—	—	—	—	—	—	4.5	5.0	4.4	5.4	4.4	5.4
C 36 2_4.6	4.6	1.8	2.0	1.8	2.2	4.3	4.7	4.4	4.9	4.3	5.3	4.3	5.3
C 36 2_5.3	5.3	1.4	1.6	1.4	1.8	3.9	4.4	4.0	4.5	3.9	4.9	3.9	4.9
C 36 2_5.8	5.8	1.3	1.5	1.3	1.7	3.8	4.2	3.9	4.4	3.8	4.8	3.8	4.8
C 36 2_6.8	6.8	—	—	—	—	—	—	5.1	5.6	5.0	6.0	5.0	6.0
C 36 2_8.0	8.0	—	—	—	—	—	—	4.4	4.9	4.3	5.3	4.3	5.3
C 36 2_8.8	8.8	—	—	—	—	—	—	4.4	4.9	4.3	5.3	4.3	5.3
C 36 2_10.6	10.6	—	—	—	—	—	—	3.9	4.4	3.8	4.8	3.8	4.8
C 36 2_11.7	11.7	1.3	1.5	1.3	1.7	3.8	4.3	3.9	4.4	3.8	4.8	3.8	4.8
C 36 2_13.3	13.3	0.96	1.2	0.98	1.4	3.5	3.9	3.6	4.1	3.5	4.5	3.5	4.5
C 36 2_14.8	14.8	0.95	1.2	0.97	1.4	3.5	3.9	3.6	4.1	3.5	4.5	3.5	4.5
C 36 2_17.2	17.2	0.74	1.0	0.76	1.2	3.3	3.7	3.4	3.9	3.3	4.3	3.3	4.3
C 36 2_19.0	19.0	0.74	1.0	0.76	1.2	3.3	3.7	3.4	3.9	3.3	4.3	3.3	4.3
C 36 3_22.1	22.1	—	—	—	—	—	—	4.7	5.2	4.6	5.6	4.6	5.6
C 36 3_26.2	26.2	—	—	—	—	—	—	4.2	4.7	4.1	5.1	4.1	5.1
C 36 3_28.7	28.7	—	—	—	—	—	—	4.2	4.7	4.1	5.1	4.1	5.1
C 36 3_34.6	34.6	—	—	—	—	—	—	3.8	4.3	3.7	4.7	3.7	4.7
C 36 3_38.1	38.1	1.2	1.4	1.2	1.6	3.7	4.2	3.8	4.3	3.7	4.7	3.7	4.7
C 36 3_43.5	43.5	0.86	1.1	0.88	1.3	3.4	3.8	3.5	4.0	3.4	4.4	3.4	4.4
C 36 3_48.2	48.2	0.87	1.1	0.89	1.3	3.4	3.9	3.5	4.0	3.4	4.4	3.4	4.4
C 36 3_56.2	56.2	0.68	0.94	0.70	1.1	3.2	3.7	3.3	3.8	3.2	4.2	3.2	4.2
C 36 3_62.0	62.0	0.69	0.95	0.71	1.1	3.2	3.7	3.3	3.8	3.2	4.2	3.2	4.2
C 36 3_70.8	70.8	0.57	0.83	0.59	1.0	3.1	3.6	3.2	3.7	3.1	4.1	3.1	4.1
C 36 3_77.6	77.6	0.55	0.81	0.57	1.0	3.1	3.5	3.2	3.7	3.1	4.1	3.1	4.1
C 36 3_83.1	83.1	0.51	0.77	0.53	0.97	3.1	3.5	3.1	3.6	3.0	4.0	3.0	4.0
C 36 3_91.9	91.9	0.48	0.74	0.50	0.94	3.0	3.5	3.1	3.6	3.0	4.0	3.0	4.0
C 36 3_102.2	102.2	0.46	0.72	0.48	0.92	3.0	3.4	3.1	3.6	3.0	4.0	3.0	4.0
C 36 3_111.5	111.5	0.43	0.69	0.45	0.89	3.0	3.4	3.1	3.6	3.0	4.0	3.0	4.0
C 36 3_125.8	125.8	0.41	0.67	0.43	0.87	3.0	3.4	3.0	3.5	2.9	3.9	2.9	3.9
C 36 3_139.8	139.8	0.38	0.64	0.40	0.84	2.9	3.4	3.0	3.5	2.9	3.9	2.9	3.9
C 36 3_162.0	162.0	0.36	0.62	0.38	0.82	2.9	3.3	3.0	3.5	2.9	3.9	2.9	3.9
C 36 3_183.5	183.5	0.34	0.60	0.36	0.80	2.9	3.3	3.0	3.5	2.9	3.9	2.9	3.9
C 36 3_206.4	206.4	0.33	0.59	0.35	0.79	2.9	3.3	3.0	3.5	2.9	3.9	2.9	3.9
C 36 4_230.9	230.9	0.35	0.61	0.37	0.81	2.9	3.3	3.0	3.5	2.9	3.9	—	—
C 36 4_255.0	255.0	0.35	0.61	0.37	0.81	2.9	3.3	3.0	3.5	2.9	3.9	—	—
C 36 4_290.9	290.9	0.34	0.60	0.36	0.80	2.9	3.3	3.0	3.5	2.9	3.9	—	—
C 36 4_318.9	318.9	0.34	0.60	0.36	0.80	2.9	3.3	3.0	3.5	2.9	3.9	—	—
C 36 4_341.7	341.7	0.34	0.60	0.36	0.80	2.9	3.3	3.0	3.5	2.9	3.9	—	—
C 36 4_377.9	377.9	0.34	0.60	0.36	0.80	2.9	3.3	3.0	3.5	2.9	3.9	—	—
C 36 4_420.2	420.2	0.33	0.59	0.35	0.79	2.9	3.3	3.0	3.5	2.9	3.9	—	—
C 36 4_458.4	458.4	0.33	0.59	0.35	0.79	2.9	3.3	3.0	3.5	2.9	3.9	—	—
C 36 4_517.2	517.2	0.33	0.59	0.35	0.79	2.9	3.3	3.0	3.5	2.9	3.9	—	—
C 36 4_574.7	574.7	0.33	0.59	0.35	0.79	2.9	3.3	3.0	3.5	2.9	3.9	—	—
C 36 4_665.9	665.9	0.33	0.59	0.35	0.79	2.9	3.3	3.0	3.5	2.9	3.9	—	—
C 36 4_754.2	754.2	0.33	0.59	0.35	0.79	2.9	3.3	3.0	3.5	2.9	3.9	—	—
C 36 4_848.5	848.5	0.33	0.59	0.35	0.79	2.9	3.3	3.0	3.5	2.9	3.9	—	—

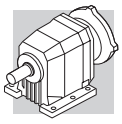

C 41

	i	J (•10-4) [kgm2]								
			IEC							
			63	71	80	90	100	112	132	
C 41 2_2.7	2.7	10	—	—	13	13	14	14	29	21
C 41 2_3.6	3.6	6.0	—	—	8.9	8.8	10	10	25	17
C 41 2_4.7	4.7	3.7	—	—	6.6	6.5	7.8	7.8	23	14
C 41 2_6.0	6.0	2.5	—	—	5.4	5.3	6.6	6.6	21	13
C 41 2_6.4	6.4	4.3	—	—	7.2	7.1	8.4	8.4	23	15
C 41 2_7.1	7.1	4.1	—	—	7.0	6.9	8.2	8.2	23	15
C 41 2_8.6	8.6	2.9	—	—	5.8	5.7	7.0	7.0	22	13
C 41 2_9.6	9.6	2.8	—	—	5.7	5.6	6.9	6.9	22	13
C 41 2_11.2	11.2	1.8	—	—	4.7	4.6	5.9	5.9	21	12
C 41 2_12.4	12.4	1.8	—	—	4.7	4.6	5.9	5.9	21	12
C 41 2_14.2	14.2	1.4	2.9	2.9	4.3	4.2	5.5	5.5	20	12
C 41 2_15.8	15.8	1.3	2.8	2.8	4.2	4.1	5.4	5.4	20	12
C 41 2_17.8	17.8	1.0	2.5	2.5	3.9	3.8	5.1	5.1	20	12
C 41 2_19.8	19.8	0.98	2.5	2.5	3.9	3.8	5.1	5.1	20	12
C 41 2_22.6	22.6	0.60	2.1	2.1	3.5	3.4	4.7	4.7	20	11
C 41 2_25.0	25.0	0.60	2.1	2.1	3.5	3.4	4.7	4.7	20	11
C 41 2_28.3	28.3	0.44	1.9	1.9	3.3	3.2	4.5	4.5	19	11
C 41 2_31.4	31.4	0.43	1.9	1.9	3.3	3.2	4.5	4.5	19	11
C 41 2_33.4	33.4	0.34	1.8	1.8	3.2	3.1	4.4	4.4	—	11
C 41 2_37.1	37.1	0.33	1.8	1.8	3.2	3.1	4.4	4.4	—	11
C 41 2_44.8	44.8	0.27	1.8	1.8	3.2	3.1	4.4	4.4	—	11
C 41 3_28.5	28.5	2.5	—	—	5.4	5.3	6.6	6.6	21	13
C 41 3_31.2	31.2	2.5	—	—	5.4	5.3	6.6	6.6	21	13
C 41 3_36.8	36.8	1.6	—	—	4.5	4.4	5.7	5.7	21	12
C 41 3_40.3	40.3	1.6	—	—	4.5	4.4	5.7	5.7	21	12
C 41 3_47.0	47.0	1.2	2.7	2.7	4.1	4.0	5.3	5.3	20	12
C 41 3_51.5	51.5	1.2	2.7	2.7	4.1	4.0	5.3	5.3	20	12
C 41 3_58.7	58.7	0.90	2.4	2.4	3.8	3.7	5.0	5.0	20	11
C 41 3_64.3	64.3	0.90	2.4	2.4	3.8	3.7	5.0	5.0	20	11
C 41 3_74.4	74.4	0.60	2.1	2.1	3.5	3.4	4.7	4.7	20	11
C 41 3_81.5	81.5	0.60	2.1	2.1	3.5	3.4	4.7	4.7	20	11
C 41 3_93.9	93.9	0.40	1.9	1.9	3.3	3.2	4.5	4.5	19	11
C 41 3_102.3	102.3	0.40	1.9	1.9	3.3	3.2	4.5	4.5	19	11
C 41 3_110.1	110.1	0.30	1.8	1.8	3.2	3.1	4.4	4.4	—	11
C 41 3_120.6	120.6	0.30	1.8	1.8	3.2	3.1	4.4	4.4	—	11
C 41 3_132.9	132.9	0.30	1.8	1.8	3.2	3.1	4.4	4.4	—	11
C 41 3_145.6	145.6	0.30	1.8	1.8	3.2	3.1	4.4	4.4	—	11
C 41 3_164.1	164.1	0.20	1.7	1.7	3.1	3.0	4.3	4.3	—	11
C 41 3_179.9	179.9	0.20	1.7	1.7	3.1	3.0	4.3	4.3	—	11
C 41 3_190.8	190.8	0.10	1.6	1.6	3.0	2.9	4.2	4.2	—	11
C 41 3_209.1	209.1	0.10	1.6	1.6	3.0	2.9	4.2	4.2	—	11
C 41 4_239.9	239.9	0.15	1.7	1.7	3.1	3.0	4.3	4.3	—	2.1
C 41 4_263.0	263.0	0.15	1.7	1.7	3.1	3.0	4.3	4.3	—	2.1
C 41 4_304.2	304.2	0.13	1.6	1.6	3.0	2.9	4.2	4.2	—	2.0
C 41 4_333.4	333.4	0.13	1.6	1.6	3.0	2.9	4.2	4.2	—	2.0
C 41 4_382.0	382.0	0.12	1.6	1.6	3.0	2.9	4.2	4.2	—	2.0
C 41 4_419.0	419.0	0.12	1.6	1.6	3.0	2.9	4.2	4.2	—	2.0
C 41 4_450.2	450.2	0.12	1.6	1.6	3.0	2.9	4.2	4.2	—	2.0
C 41 4_493.5	493.5	0.12	1.6	1.6	3.0	2.9	4.2	4.2	—	2.0
C 41 4_543.5	543.5	0.12	1.6	1.6	3.0	2.9	4.2	4.2	—	2.0
C 41 4_595.8	595.8	0.12	1.6	1.6	3.0	2.9	4.2	4.2	—	2.0
C 41 4_671.3	671.3	0.10	1.6	1.6	3.0	2.9	4.2	4.2	—	2.0
C 41 4_735.9	735.9	0.10	1.6	1.6	3.0	2.9	4.2	4.2	—	2.0
C 41 4_780.4	780.4	0.10	1.6	1.6	3.0	2.9	4.2	4.2	—	2.0
C 41 4_855.5	855.5	0.10	1.6	1.6	3.0	2.9	4.2	4.2	—	2.0

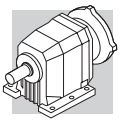

C 41

	i	J (•10-4) [kgm2]																	
		SERVO																	
		60A		60B 80A		80B		95A		80C 95B 110A		95C 110B		130A		130B 180A		180B	
		SK	SC	SK	SC	SK	SC	SK	SC	SK	SC	SK	SC	SK	SC	SK	SC	SK	SC
C 41 2_2.7	2.7	—	—	—	—	—	—	—	—	13	14	13	14	13	14	27	29	29	34
C 41 2_3.6	3.6	—	—	—	—	—	—	—	—	8.9	9.4	8.8	9.8	8.8	9.8	23	25	25	30
C 41 2_4.7	4.7	—	—	—	—	—	—	—	—	6.6	7.1	6.5	7.5	6.5	7.5	21	23	23	28
C 41 2_6.0	6.0	—	—	—	—	5.3	5.8	5.3	5.8	5.4	5.9	5.3	6.3	5.3	6.3	19	22	21	26
C 41 2_6.4	6.4	—	—	—	—	—	—	—	—	7.2	7.7	7.1	8.1	7.1	8.1	21	24	23	28
C 41 2_7.1	7.1	—	—	—	—	—	—	—	—	7.0	7.5	6.9	7.9	6.9	7.9	21	24	23	28
C 41 2_8.6	8.6	—	—	—	—	—	—	—	—	5.8	6.3	5.7	6.7	5.7	6.7	20	22	22	27
C 41 2_9.6	9.6	—	—	—	—	—	—	—	—	5.7	6.2	5.6	6.6	5.6	6.6	20	22	22	27
C 41 2_11.2	11.2	—	—	—	—	—	—	—	—	4.7	5.2	4.6	5.6	4.6	5.6	19	21	21	26
C 41 2_12.4	12.4	—	—	—	—	—	—	—	—	4.7	5.2	4.6	5.6	4.6	5.6	19	21	21	26
C 41 2_14.2	14.2	—	—	—	—	4.2	4.7	4.2	4.7	4.3	4.8	4.2	5.2	4.2	5.2	18	21	20	25
C 41 2_15.8	15.8	—	—	—	—	4.1	4.6	4.1	4.6	4.2	4.7	4.1	5.1	4.1	5.1	18	21	20	25
C 41 2_17.8	17.8	—	—	—	—	3.8	5.3	3.8	5.3	3.9	4.4	3.8	4.8	3.8	4.8	18	20	20	25
C 41 2_19.8	19.8	—	—	—	—	3.8	4.2	3.8	4.2	3.9	4.4	3.8	4.8	3.8	4.8	18	20	20	25
C 41 2_22.6	22.6	—	—	—	—	3.4	3.9	3.4	3.9	3.5	4.0	3.4	4.4	3.4	4.4	18	20	20	25
C 41 2_25.0	25.0	—	—	—	—	3.4	3.9	3.4	3.9	3.5	4.0	3.4	4.4	3.4	4.4	18	20	20	25
C 41 2_28.3	28.3	—	—	—	—	3.3	3.7	3.3	3.7	3.3	3.8	3.2	4.2	3.2	4.2	17	20	19	24
C 41 2_31.4	31.4	—	—	—	—	3.3	3.7	3.3	3.7	3.3	3.8	3.2	4.2	3.2	4.2	17	20	19	24
C 41 2_33.4	33.4	—	—	—	—	3.2	3.6	3.2	3.6	3.2	3.7	3.1	4.1	3.1	4.1	—	—	—	—
C 41 2_37.1	37.1	—	—	—	—	3.2	3.6	3.2	3.6	3.2	3.7	3.1	4.1	3.1	4.1	—	—	—	—
C 41 2_44.8	44.8	—	—	—	—	3.1	3.5	3.1	3.5	3.2	3.7	3.1	4.1	3.1	4.1	—	—	—	—
C 41 3_28.5	28.5	—	—	—	—	—	—	—	—	5.4	5.9	5.3	6.3	5.3	6.3	19	22	21	26
C 41 3_31.2	31.2	—	—	—	—	—	—	—	—	5.4	5.9	5.3	6.3	5.3	6.3	19	22	21	26
C 41 3_36.8	36.8	—	—	—	—	—	—	—	—	4.5	5.0	4.4	5.4	4.4	5.4	19	21	21	26
C 41 3_40.3	40.3	—	—	—	—	—	—	—	—	4.5	5.0	4.4	5.4	4.4	5.4	19	21	21	26
C 41 3_47.0	47.0	—	—	—	—	4.0	4.5	4.0	4.5	4.1	4.6	4.0	5.0	4.0	5.0	18	21	20	25
C 41 3_51.5	51.5	—	—	—	—	4.0	4.5	4.0	4.5	4.1	4.6	4.0	5.0	4.0	5.0	18	21	20	25
C 41 3_58.7	58.7	—	—	—	—	3.7	4.2	3.7	4.2	3.8	4.3	3.7	4.7	3.7	4.7	18	20	20	25
C 41 3_64.3	64.3	—	—	—	—	3.7	4.2	3.7	4.2	3.8	4.3	3.7	4.7	3.7	4.7	18	20	20	25
C 41 3_74.4	74.4	—	—	—	—	3.4	3.9	3.4	3.9	3.5	4.0	3.4	4.4	3.4	4.4	18	20	20	25
C 41 3_81.5	81.5	—	—	—	—	3.4	3.9	3.4	3.9	3.5	4.0	3.4	4.4	3.4	4.4	18	20	20	25
C 41 3_93.9	93.9	—	—	—	—	3.2	3.7	3.2	3.7	3.3	3.8	3.2	4.2	3.2	4.2	17	20	19	24
C 41 3_102.3	102.3	—	—	—	—	3.2	3.7	3.2	3.7	3.3	3.8	3.2	4.2	3.2	4.2	17	20	19	24
C 41 3_110.1	110.1	—	—	—	—	3.1	3.6	3.1	3.6	3.2	3.7	3.1	4.1	3.1	4.1	—	—	—	—
C 41 3_120.6	120.6	—	—	—	—	3.1	3.6	3.1	3.6	3.2	3.7	3.1	4.1	3.1	4.1	—	—	—	—
C 41 3_132.9	132.9	—	—	—	—	3.1	3.6	3.1	3.6	3.2	3.7	3.1	4.1	3.1	4.1	—	—	—	—
C 41 3_145.6	145.6	—	—	—	—	3.1	3.6	3.1	3.6	3.2	3.7	3.1	4.1	3.1	4.1	—	—	—	—
C 41 3_164.1	164.1	—	—	—	—	3.0	3.5	3.0	3.5	3.1	3.6	3.0	4.0	3.0	4.0	—	—	—	—
C 41 3_179.9	179.9	—	—	—	—	3.0	3.5	3.0	3.5	3.1	3.6	3.0	4.0	3.0	4.0	—	—	—	—
C 41 3_190.8	190.8	—	—	—	—	2.9	3.4	2.9	3.4	3.0	3.5	2.9	3.9	2.9	3.9	—	—	—	—
C 41 3_209.1	209.1	—	—	—	—	2.9	3.4	2.9	3.4	3.0	3.5	2.9	3.9	2.9	3.9	—	—	—	—
C 41 4_239.9	239.9	0.42	0.68	0.44	0.88	—	—	3.0	3.4	3.1	3.6	3.0	4.0	—	—	—	—	—	—
C 41 4_263.0	263.0	0.42	0.68	0.44	0.88	—	—	3.0	3.4	3.1	3.6	3.0	4.0	—	—	—	—	—	—
C 41 4_304.2	304.2	0.40	0.66	0.42	0.86	—	—	3.0	3.4	3.0	3.5	2.9	3.9	—	—	—	—	—	—
C 41 4_333.4	333.4	0.40	0.66	0.42	0.86	—	—	3.0	3.4	3.0	3.5	2.9	3.9	—	—	—	—	—	—
C 41 4_382.0	382.0	0.39	0.65	0.41	0.85	—	—	2.9	3.4	3.0	3.5	2.9	3.9	—	—	—	—	—	—
C 41 4_419.0	419.0	0.39	0.65	0.41	0.85	—	—	2.9	3.4	3.0	3.5	2.9	3.9	—	—	—	—	—	—
C 41 4_450.2	450.2	0.39	0.65	0.41	0.85	—	—	2.9	3.4	3.0	3.5	2.9	3.9	—	—	—	—	—	—
C 41 4_493.5	493.5	0.39	0.65	0.41	0.85	—	—	2.9	3.4	3.0	3.5	2.9	3.9	—	—	—	—	—	—
C 41 4_543.5	543.5	0.39	0.65	0.41	0.85	—	—	2.9	3.4	3.0	3.5	2.9	3.9	—	—	—	—	—	—
C 41 4_595.8	595.8	0.39	0.65	0.41	0.85	—	—	2.9	3.4	3.0	3.5	2.9	3.9	—	—	—	—	—	—
C 41 4_671.3	671.3	0.37	0.63	0.39	0.83	—	—	2.9	3.4	3.0	3.5	2.9	3.9	—	—	—	—	—	—
C 41 4_735.9	735.9	0.37	0.63	0.39	0.83	—	—	2.9	3.4	3.0	3.5	2.9	3.9	—	—	—	—	—	—
C 41 4_780.4	780.4	0.37	0.63	0.39	0.83	—	—	2.9	3.4	3.0	3.5	2.9	3.9	—	—	—	—	—	—
C 41 4_855.5	855.5	0.37	0.63	0.39	0.83	—	—	2.9	3.4	3.0	3.5	2.9	3.9	—	—	—	—	—	—

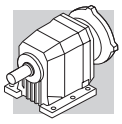

C 51

	i	J (•10-4) [kgm2]										
			IEC									
			63	71	80	90	100	112	132	160	180	
C 51 2_2.6	2.6	15	—	—	17	17	19	19	33	79	76	25
C 51 2_3.3	3.3	10	—	—	13	13	14	14	29	75	72	21
C 51 2_4.5	4.5	6.3	—	—	9.2	9.1	10	10	25	71	68	17
C 51 2_5.6	5.6	4.1	—	—	7.0	6.9	8.2	8.2	23	69	66	15
C 51 2_7.0	7.0	8.1	—	—	11	11	12	12	27	73	70	19
C 51 2_7.8	7.8	7.8	—	—	11	11	12	12	27	73	70	18
C 51 2_8.8	8.8	6.0	—	—	8.9	8.8	10	10	25	71	68	17
C 51 2_9.8	9.8	5.8	—	—	8.7	8.6	9.9	9.9	25	71	68	16
C 51 2_11.8	11.8	4.1	—	—	7.0	6.9	8.2	8.2	23	69	66	15
C 51 2_13.1	13.1	4.0	—	—	6.9	6.8	8.1	8.1	23	69	66	15
C 51 2_15.0	15.0	2.7	—	—	5.6	5.5	6.8	6.8	22	68	65	13
C 51 2_16.6	16.6	2.6	—	—	5.5	5.4	6.7	6.7	22	68	65	13
C 51 2_18.9	18.9	2.0	3.5	3.5	4.9	4.8	6.1	6.1	21	67	64	13
C 51 2_21.0	21.0	1.9	3.4	3.4	4.8	4.7	6.0	6.0	21	67	64	12
C 51 2_23.4	23.4	1.5	3.0	3.0	4.4	4.3	5.6	5.6	20	66	63	12
C 51 2_25.9	25.9	1.4	2.9	2.9	4.3	4.2	5.5	5.5	20	66	63	12
C 51 2_29.8	29.8	0.90	2.4	2.4	3.8	3.7	5.0	5.0	20	66	63	11
C 51 2_33.0	33.0	0.90	2.4	2.4	3.8	3.7	5.0	5.0	20	66	63	11
C 51 2_36.4	36.4	0.70	2.2	2.2	3.6	3.5	4.8	4.8	20	66	63	11
C 51 2_40.4	40.4	0.70	2.2	2.2	3.6	3.5	4.8	4.8	20	66	63	11
C 51 2_43.1	43.1	0.50	2.0	2.0	3.4	3.3	4.6	4.6	—	—	—	11
C 51 2_47.8	47.8	0.50	2.0	2.0	3.4	3.3	4.6	4.6	—	—	—	11
C 51 2_51.4	51.4	0.40	1.9	1.9	3.3	3.2	4.5	4.5	—	—	—	11
C 51 2_57.0	57.0	0.40	1.9	1.9	3.3	3.2	4.5	4.5	—	—	—	11
C 51 3_21.8	21.8	6.8	—	—	9.7	9.6	11	11	26	72	69	17
C 51 3_23.9	23.9	6.8	—	—	9.7	9.6	11	11	26	72	69	17
C 51 3_27.4	27.4	5.2	—	—	8.1	8.0	9.3	9.3	24	70	67	16
C 51 3_30.1	30.1	5.2	—	—	8.1	8.0	9.3	9.3	24	70	67	16
C 51 3_37.0	37.0	3.6	—	—	6.5	6.4	7.7	7.7	23	69	66	14
C 51 3_40.5	40.5	3.6	—	—	6.5	6.4	7.7	7.7	23	69	66	14
C 51 3_46.7	46.7	2.4	—	—	5.3	5.2	6.5	6.5	21	67	64	13
C 51 3_51.2	51.2	2.4	—	—	5.3	5.2	6.5	6.5	21	67	64	13
C 51 3_59.0	59.0	1.8	3.3	3.3	4.7	4.6	5.9	5.9	21	67	64	12
C 51 3_64.6	64.6	1.8	3.3	3.3	4.7	4.6	5.9	5.9	21	67	64	12
C 51 3_72.9	72.9	1.3	2.8	2.8	4.2	4.1	5.4	5.4	20	66	63	12
C 51 3_79.9	79.9	1.3	2.8	2.8	4.2	4.1	5.4	5.4	20	66	63	12
C 51 3_93.0	93.0	0.80	2.3	2.3	3.7	3.6	4.9	4.9	20	66	63	11
C 51 3_101.8	101.8	0.80	2.3	2.3	3.7	3.6	4.9	4.9	20	66	63	11
C 51 3_113.6	113.6	0.60	2.1	2.1	3.5	3.4	4.7	4.7	20	66	63	11
C 51 3_124.4	124.4	0.60	2.1	2.1	3.5	3.4	4.7	4.7	20	66	63	11
C 51 3_134.6	134.6	0.50	2.0	2.0	3.4	3.3	4.6	4.6	—	—	—	11
C 51 3_147.4	147.4	0.50	2.0	2.0	3.4	3.3	4.6	4.6	—	—	—	11
C 51 3_160.5	160.5	0.40	1.9	1.9	3.3	3.2	4.5	4.5	—	—	—	11
C 51 3_175.8	175.8	0.40	1.9	1.9	3.3	3.2	4.5	4.5	—	—	—	11
C 51 3_197.9	197.9	0.30	1.8	1.8	3.2	3.1	4.4	4.4	—	—	—	11
C 51 3_216.7	216.7	0.30	1.8	1.8	3.2	3.1	4.4	4.4	—	—	—	11
C 51 4_240.9	240.9	0.30	1.8	1.8	3.2	3.1	4.4	4.4	17	—	—	1.2
C 51 4_263.8	263.8	0.30	1.8	1.8	3.2	3.1	4.4	4.4	17	—	—	1.2
C 51 4_297.8	297.8	0.30	1.8	1.8	3.2	3.1	4.4	4.4	17	—	—	1.2
C 51 4_326.1	326.1	0.30	1.8	1.8	3.2	3.1	4.4	4.4	17	—	—	1.2
C 51 4_380.0	380.0	0.20	1.7	1.7	3.1	3.0	4.3	4.3	17	—	—	1.1
C 51 4_416.0	416.0	0.20	1.7	1.7	3.1	3.0	4.3	4.3	17	—	—	1.1
C 51 4_463.9	463.9	0.20	1.7	1.7	3.1	3.0	4.3	4.3	17	—	—	1.1
C 51 4_508.0	508.0	0.20	1.7	1.7	3.1	3.0	4.3	4.3	17	—	—	1.1
C 51 4_549.7	549.7	0.20	1.7	1.7	3.1	3.0	4.3	4.3	—	—	—	1.1
C 51 4_602.0	602.0	0.20	1.7	1.7	3.1	3.0	4.3	4.3	—	—	—	1.1
C 51 4_655.4	655.4	0.20	1.7	1.7	3.1	3.0	4.3	4.3	—	—	—	1.1
C 51 4_717.7	717.7	0.20	1.7	1.7	3.1	3.0	4.3	4.3	—	—	—	1.1
C 51 4_808.0	808.0	0.20	1.7	1.7	3.1	3.0	4.3	4.3	—	—	—	1.1
C 51 4_884.9	884.9	0.20	1.7	1.7	3.1	3.0	4.3	4.3	—	—	—	1.1

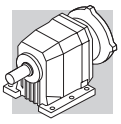

C 51

	i	J (•10-4) [kgm2]											
		SERVO											
		80B		95A		80C 95B 110A		95C 110B 130A		130B 180A		180B	
		SK	SC	SK	SC	SK	SC	SK	SC	SK	SC	SK	SC
C 51 2_2.6	2.6	—	—	—	—	17	18	17	18	32	34	33	38
C 51 2_3.3	3.3	—	—	—	—	13	14	13	14	27	29	29	34
C 51 2_4.5	4.5	—	—	—	—	9.2	9.7	9.1	10	23	26	25	30
C 51 2_5.6	5.6	—	—	—	—	7.0	7.5	6.9	7.9	21	24	23	28
C 51 2_7.0	7.0	—	—	—	—	11	12	11	12	25	28	27	32
C 51 2_7.8	7.8	—	—	—	—	11	12	11	12	25	27	27	32
C 51 2_8.8	8.8	—	—	—	—	8.9	9.4	8.8	9.8	23	25	25	30
C 51 2_9.8	9.8	—	—	—	—	8.7	9.2	8.6	9.6	23	25	25	30
C 51 2_11.8	11.8	—	—	—	—	7.0	7.5	6.9	7.9	21	24	23	28
C 51 2_13.1	13.1	—	—	—	—	6.9	7.4	6.8	7.8	21	23	23	28
C 51 2_15.0	15.0	—	—	—	—	5.6	6.1	5.5	6.5	20	22	22	27
C 51 2_16.6	16.6	—	—	—	—	5.5	6.0	5.4	6.4	20	22	22	27
C 51 2_18.9	18.9	4.8	5.3	4.8	5.3	4.9	5.4	4.8	5.8	19	21	21	26
C 51 2_21.0	21.0	4.7	5.2	4.7	5.2	4.8	5.3	4.7	5.7	19	21	21	26
C 51 2_23.4	23.4	4.3	4.8	4.3	4.8	4.4	4.3	4.3	5.3	18	21	20	25
C 51 2_25.9	25.9	4.2	4.7	4.2	4.7	4.3	4.8	4.2	5.2	18	21	20	25
C 51 2_29.8	29.8	3.7	4.2	3.7	4.2	3.8	4.3	3.7	4.7	18	20	20	25
C 51 2_33.0	33.0	3.7	4.2	3.7	4.2	3.8	4.3	3.7	4.7	18	20	20	25
C 51 2_36.4	36.4	3.5	4.0	3.5	4.0	3.6	4.1	3.5	4.5	18	20	20	25
C 51 2_40.4	40.4	3.5	4.0	3.5	4.0	3.6	4.1	3.5	4.5	18	20	20	25
C 51 2_43.1	43.1	3.3	3.8	3.3	3.8	3.4	3.9	3.3	4.3	—	—	—	—
C 51 2_47.8	47.8	3.3	3.8	3.3	3.8	3.4	3.9	3.3	4.3	—	—	—	—
C 51 2_51.4	51.4	3.2	3.7	3.2	3.7	3.3	3.8	3.2	4.2	—	—	—	—
C 51 2_57.0	57.0	3.2	3.7	3.2	3.7	3.3	3.8	3.2	4.2	—	—	—	—
C 51 3_21.8	21.8	—	—	—	—	9.7	10	9.6	11	24	26	26	31
C 51 3_23.9	23.9	—	—	—	—	9.7	10	9.6	11	24	26	26	31
C 51 3_27.4	27.4	—	—	—	—	8.1	8.6	8.0	9.0	22	25	24	29
C 51 3_30.1	30.1	—	—	—	—	8.1	8.6	8.0	9.0	22	25	24	29
C 51 3_37.0	37.0	—	—	—	—	6.5	7.0	6.4	7.4	21	23	23	28
C 51 3_40.5	40.5	—	—	—	—	6.5	7.0	6.4	7.4	21	23	23	28
C 51 3_46.7	46.7	—	—	—	—	5.3	5.8	5.2	6.2	19	22	21	26
C 51 3_51.2	51.2	—	—	—	—	5.3	5.8	5.2	6.2	19	22	21	26
C 51 3_59.0	59.0	4.6	5.1	4.6	5.1	4.7	5.2	4.6	5.6	19	21	21	26
C 51 3_64.6	64.6	4.6	5.1	4.6	5.1	4.7	5.2	4.6	5.6	19	21	21	26
C 51 3_72.9	72.9	4.1	4.6	4.1	4.6	4.2	5.2	4.1	5.1	18	21	20	25
C 51 3_79.9	79.9	4.1	4.6	4.1	4.6	4.2	5.2	4.1	5.1	18	21	20	25
C 51 3_93.0	93.0	3.6	4.1	3.6	4.1	3.7	4.2	3.6	4.6	18	20	20	25
C 51 3_101.8	101.8	3.6	4.1	3.6	4.1	3.7	4.2	3.6	4.6	18	20	20	25
C 51 3_113.6	113.6	3.4	3.9	3.4	3.9	3.5	4.0	3.4	4.4	18	20	20	25
C 51 3_124.4	124.4	3.4	3.9	3.4	3.9	3.5	4.0	3.4	4.4	18	20	20	25
C 51 3_134.6	134.6	3.3	3.8	3.3	3.8	3.4	3.9	3.3	4.3	—	—	—	—
C 51 3_147.4	147.4	3.3	3.8	3.3	3.8	3.4	3.9	3.3	4.3	—	—	—	—
C 51 3_160.5	160.5	3.2	3.7	3.2	3.7	3.3	3.8	3.2	4.2	—	—	—	—
C 51 3_175.8	175.8	3.2	3.7	3.2	3.7	3.3	3.8	3.2	4.2	—	—	—	—
C 51 3_197.9	197.9	3.1	3.6	3.1	3.6	3.2	3.7	3.1	4.1	—	—	—	—
C 51 3_216.7	216.7	3.1	3.6	3.1	3.6	3.2	3.7	3.1	4.1	—	—	—	—
C 51 4_240.9	240.9	—	—	3.1	3.6	3.2	3.7	3.1	4.1	—	—	—	—
C 51 4_263.8	263.8	—	—	3.1	3.6	3.2	3.7	3.1	4.1	—	—	—	—
C 51 4_297.8	297.8	—	—	3.1	3.6	3.2	3.7	3.1	4.1	—	—	—	—
C 51 4_326.1	326.1	—	—	3.1	3.6	3.2	3.7	3.1	4.1	—	—	—	—
C 51 4_380.0	380.0	—	—	3.0	3.5	3.1	3.6	3.0	4.0	—	—	—	—
C 51 4_416.0	416.0	—	—	3.0	3.5	3.1	3.6	3.0	4.0	—	—	—	—
C 51 4_463.9	463.9	—	—	3.0	3.5	3.1	3.6	3.0	4.0	—	—	—	—
C 51 4_508.0	508.0	—	—	3.0	3.5	3.1	3.6	3.0	4.0	—	—	—	—
C 51 4_549.7	549.7	—	—	3.0	3.5	3.1	3.6	3.0	4.0	—	—	—	—
C 51 4_602.0	602.0	—	—	3.0	3.5	3.1	3.6	3.0	4.0	—	—	—	—
C 51 4_655.4	655.4	—	—	3.0	3.5	3.1	3.6	3.0	4.0	—	—	—	—
C 51 4_717.7	717.7	—	—	3.0	3.5	3.1	3.6	3.0	4.0	—	—	—	—
C 51 4_808.0	808.0	—	—	3.0	3.5	3.1	3.6	3.0	4.0	—	—	—	—
C 51 4_884.9	884.9	—	—	3.0	3.5	3.1	3.6	3.0	4.0	—	—	—	—

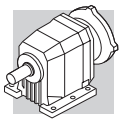

C 61

	i	J (•10-4) [kgm2]										
			IEC									
			63	71	80	90	100	112	132	160	180	
C 61 2_2.8	2.8	30	—	—	—	—	—	—	49	78	76	52
C 61 2_3.7	3.7	19	—	—	22	22	23	23	38	78	76	41
C 61 2_4.6	4.6	14	—	—	17	17	18	18	33	78	76	36
C 61 2_6.0	6.0	8.8	—	—	12	12	13	13	28	78	76	31
C 61 2_6.7	6.7	14	—	—	—	—	—	—	33	78	76	36
C 61 2_7.5	7.5	13	—	—	—	—	—	—	32	78	76	35
C 61 2_8.8	8.8	13	—	—	16	16	17	17	32	78	76	35
C 61 2_9.8	9.8	12	—	—	15	15	16	16	31	78	76	34
C 61 2_10.9	10.9	9.6	—	—	13	12	14	14	29	78	76	31
C 61 2_12.1	12.1	9.2	—	—	12	12	13	13	28	78	76	31
C 61 2_14.3	14.3	5.8	—	—	8.7	8.6	9.9	9.9	25	78	76	28
C 61 2_15.9	15.9	5.6	—	—	8.5	8.4	9.7	9.7	25	78	76	27
C 61 2_17.7	17.7	4.4	—	—	7.3	7.2	8.5	8.5	23	78	76	26
C 61 2_19.6	19.6	4.3	—	—	7.2	7.1	8.4	8.4	23	78	76	26
C 61 2_22.4	22.4	3.2	4.7	4.7	6.1	6.0	7.3	7.3	22	78	76	25
C 61 2_24.8	24.8	3.1	4.6	4.6	6.0	5.9	7.2	7.2	22	78	76	25
C 61 2_27.4	27.4	2.1	3.6	3.6	5.0	4.9	6.2	6.2	21	78	76	24
C 61 2_30.4	30.4	2.2	3.7	3.7	5.1	5.0	6.3	6.3	21	78	76	24
C 61 2_34.2	34.2	1.5	3.0	3.0	4.4	4.3	5.6	5.6	20	78	76	23
C 61 2_38.0	38.0	1.5	3.0	3.0	4.4	4.3	5.6	5.6	20	78	76	23
C 61 3_26.8	26.8	10	—	—	13	13	14	14	29	78	76	32
C 61 3_29.4	29.4	10	—	—	13	13	14	14	29	78	76	32
C 61 3_33.0	33.0	8.1	—	—	11	11	12	12	27	78	76	30
C 61 3_36.1	36.1	8.1	—	—	11	11	12	12	27	78	76	30
C 61 3_43.4	43.4	5.0	—	—	7.9	7.8	9.1	9.1	24	78	76	27
C 61 3_47.6	47.6	5.0	—	—	7.9	7.8	9.1	9.1	24	78	76	27
C 61 3_53.5	53.5	3.9	—	—	6.8	6.7	8.0	8.0	23	78	76	26
C 61 3_58.6	58.6	3.8	—	—	6.7	6.6	7.9	7.9	23	78	76	26
C 61 3_67.7	67.7	2.8	4.3	4.3	5.7	5.6	6.9	6.9	22	78	76	25
C 61 3_74.2	74.2	2.8	4.3	4.3	5.7	5.6	6.9	6.9	22	78	76	25
C 61 3_83.0	83.0	1.9	3.4	3.4	4.8	4.7	6.0	6.0	21	78	76	24
C 61 3_91.0	91.0	1.9	3.4	3.4	4.8	4.7	6.0	6.0	21	78	76	24
C 61 3_103.6	103.6	1.3	2.8	2.8	4.2	4.1	5.4	5.4	20	78	76	23
C 61 3_113.6	113.6	1.3	2.8	2.8	4.2	4.1	5.4	5.4	20	78	76	23
C 61 3_128.1	128.1	1.0	2.5	2.5	3.9	3.8	5.1	5.1	20	78	76	23
C 61 3_140.5	140.5	1.0	2.5	2.5	3.9	3.8	5.1	5.1	20	78	76	23
C 61 3_150.0	150.0	0.70	2.2	2.2	3.6	3.5	4.8	4.8	—	—	—	23
C 61 3_164.5	164.5	0.70	2.2	2.2	3.6	3.5	4.8	4.8	—	—	—	23
C 61 3_178.6	178.6	0.60	2.1	2.1	3.5	3.4	4.7	4.7	—	—	—	22
C 61 3_195.8	195.8	0.60	2.1	2.1	3.5	3.4	4.7	4.7	—	—	—	22
C 61 4_217.4	217.4	0.67	2.2	2.2	3.6	3.5	4.8	4.8	—	—	—	11
C 61 4_238.3	238.3	0.67	2.2	2.2	3.6	3.5	4.8	4.8	—	—	—	11
C 61 4_275.3	275.3	0.81	2.3	2.3	3.7	3.6	4.9	4.9	—	—	—	11
C 61 4_301.7	301.7	0.81	2.3	2.3	3.7	3.6	4.9	4.9	—	—	—	11
C 61 4_337.7	337.7	0.56	2.1	2.1	3.5	3.4	4.7	4.7	—	—	—	11
C 61 4_370.1	370.1	0.56	2.1	2.1	3.5	3.4	4.7	4.7	—	—	—	11
C 61 4_421.5	421.5	0.53	2.0	2.0	3.4	3.3	4.6	4.6	—	—	—	11
C 61 4_462.0	462.0	0.53	2.0	2.0	3.4	3.3	4.6	4.6	—	—	—	11
C 61 4_521.1	521.1	0.51	2.0	2.0	3.4	3.3	4.6	4.6	—	—	—	11
C 61 4_571.2	571.2	0.51	2.0	2.0	3.4	3.3	4.6	4.6	—	—	—	11
C 61 4_610.1	610.1	0.49	2.0	2.0	3.4	3.3	4.6	4.6	—	—	—	11
C 61 4_668.8	668.8	0.49	2.0	2.0	3.4	3.3	4.6	4.6	—	—	—	11
C 61 4_726.3	726.3	0.48	2.0	2.0	3.4	3.3	4.6	4.6	—	—	—	11
C 61 4_796.1	796.1	0.48	2.0	2.0	3.4	3.3	4.6	4.6	—	—	—	11

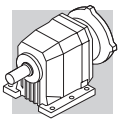

C 61

	i	J (•10-4) [kgm2]											
		SERVO											
		80B		95A		80C 95B 110A		95C 110B 130A		130B 180A		180B	
		SK	SC	SK	SC	SK	SC	SK	SC	SK	SC	SK	SC
C 61 2_2.8	2.8	—	—	—	—	—	—	—	—	47	49	49	54
C 61 2_3.7	3.7	—	—	—	—	22	23	22	23	36	38	38	43
C 61 2_4.6	4.6	—	—	—	—	17	18	17	18	31	33	33	38
C 61 2_6.0	6.0	—	—	—	—	12	13	12	13	26	28	28	33
C 61 2_6.7	6.7	—	—	—	—	—	—	—	—	31	33	33	38
C 61 2_7.5	7.5	—	—	—	—	—	—	—	—	30	32	32	37
C 61 2_8.8	8.8	—	—	—	—	16	17	16	17	30	32	32	37
C 61 2_9.8	9.8	—	—	—	—	15	16	15	16	23	31	31	36
C 61 2_10.9	10.9	—	—	—	—	13	14	12	13	27	29	29	34
C 61 2_12.1	12.1	—	—	—	—	12	13	12	13	26	29	28	33
C 61 2_14.3	14.3	—	—	—	—	8.7	9.2	8.6	9.6	23	25	25	30
C 61 2_15.9	15.9	—	—	—	—	8.5	9.0	8.4	9.4	23	25	25	30
C 61 2_17.7	17.7	—	—	—	—	7.3	7.8	7.2	8.2	21	24	23	28
C 61 2_19.6	19.6	—	—	—	—	7.2	7.7	7.1	8.1	21	24	23	28
C 61 2_22.4	22.4	—	—	6.0	6.5	6.1	6.6	6.0	7.0	20	23	22	27
C 61 2_24.8	24.8	—	—	5.9	6.4	6.0	6.5	5.9	6.9	20	23	22	27
C 61 2_27.4	27.4	—	—	4.9	5.4	5.0	5.5	4.9	5.9	19	22	21	26
C 61 2_30.4	30.4	—	—	5.0	5.5	5.1	5.6	5.0	6.0	19	22	21	26
C 61 2_34.2	34.2	—	—	4.3	4.8	4.4	4.9	4.3	5.3	18	21	20	25
C 61 2_38.0	38.0	—	—	4.3	4.8	4.4	4.9	4.3	5.3	18	21	20	25
C 61 3_26.8	26.8	—	—	—	—	13	14	13	14	27	29	29	34
C 61 3_29.4	29.4	—	—	—	—	13	14	13	14	27	29	29	34
C 61 3_33.0	33.0	—	—	—	—	11	12	11	12	25	28	27	32
C 61 3_36.1	36.1	—	—	—	—	11	12	11	12	25	28	27	32
C 61 3_43.4	43.4	—	—	—	—	7.9	8.4	7.8	8.8	22	24	24	29
C 61 3_47.6	47.6	—	—	—	—	7.9	8.4	7.8	8.8	22	24	24	29
C 61 3_53.5	53.5	—	—	—	—	6.8	7.3	6.7	7.7	21	23	23	28
C 61 3_58.6	58.6	—	—	—	—	6.7	7.2	6.6	7.6	21	23	23	28
C 61 3_67.7	67.7	—	—	5.6	6.1	5.7	6.2	5.6	6.6	20	22	22	27
C 61 3_74.2	74.2	—	—	5.6	6.1	5.7	6.2	5.6	6.6	20	22	22	27
C 61 3_83.0	83.0	—	—	4.7	5.2	4.8	5.3	4.7	5.7	19	21	21	26
C 61 3_91.0	91.0	—	—	4.7	5.2	4.8	5.3	4.7	5.7	19	21	21	26
C 61 3_103.6	103.6	—	—	4.1	4.6	4.2	4.7	4.1	5.1	18	21	20	25
C 61 3_113.6	113.6	—	—	4.1	4.6	4.2	4.7	4.1	5.1	18	21	20	25
C 61 3_128.1	128.1	—	—	3.8	4.3	3.9	4.4	3.8	4.8	18	20	20	25
C 61 3_140.5	140.5	—	—	3.8	4.3	3.9	4.4	3.8	4.8	18	20	20	25
C 61 3_150.0	150.0	—	—	3.5	4.0	3.6	4.1	3.5	4.5	—	—	—	—
C 61 3_164.5	164.5	—	—	3.5	4.0	3.6	4.1	3.5	4.5	—	—	—	—
C 61 3_178.6	178.6	—	—	3.4	3.9	3.5	4.0	3.4	4.4	—	—	—	—
C 61 3_195.8	195.8	—	—	3.4	3.9	3.5	4.0	3.4	4.4	—	—	—	—
C 61 4_217.4	217.4	3.5	3.9	3.5	3.9	3.6	4.1	3.5	4.5	—	—	—	—
C 61 4_238.3	238.3	3.5	3.9	3.5	3.9	3.6	4.1	3.5	4.5	—	—	—	—
C 61 4_275.3	275.3	3.6	4.1	3.6	4.1	3.7	4.2	3.6	4.6	—	—	—	—
C 61 4_301.7	301.7	3.6	4.1	3.6	4.1	3.7	4.2	3.6	4.6	—	—	—	—
C 61 4_337.7	337.7	3.4	3.8	3.4	3.8	3.5	4.0	3.4	4.4	—	—	—	—
C 61 4_370.1	370.1	3.4	3.8	3.4	3.8	3.5	4.0	3.4	4.4	—	—	—	—
C 61 4_421.5	421.5	3.4	3.8	3.4	3.8	3.4	3.9	3.3	4.3	—	—	—	—
C 61 4_462.0	462.0	3.4	3.8	3.4	3.8	3.4	3.9	3.3	4.3	—	—	—	—
C 61 4_521.1	521.1	3.3	3.8	3.3	3.8	3.4	3.9	3.3	4.3	—	—	—	—
C 61 4_571.2	571.2	3.3	3.8	3.3	3.8	3.4	3.9	3.3	4.3	—	—	—	—
C 61 4_610.1	610.1	3.3	3.7	3.3	3.7	3.4	3.9	3.3	4.3	—	—	—	—
C 61 4_668.8	668.8	3.3	3.7	3.3	3.7	3.4	3.9	3.3	4.3	—	—	—	—
C 61 4_726.3	726.3	3.3	3.7	3.3	3.7	3.4	3.9	3.3	4.3	—	—	—	—
C 61 4_796.1	796.1	3.3	3.7	3.3	3.7	3.4	3.9	3.3	4.3	—	—	—	—

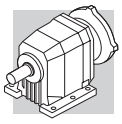

C 70

	i	J (•10-4) [kgm2]													
			IEC												
			63	71	80	90	100 112	132	160	180	200	225	250	280	
C 70 2_4.6	4.6	—	—	—	—	—	—	—	136	133	143	—	—	—	99
C 70 2_5.9	5.9	—	—	—	—	—	—	—	119	117	126	—	—	—	32
C 70 2_6.3	6.3	—	—	—	—	—	—	—	129	127	136	—	—	—	93
C 70 2_7.5	7.5	26	—	—	—	—	—	45	105	102	112	—	—	—	68
C 70 2_8.0	8.0	—	—	—	—	—	—	—	115	113	122	—	—	—	78
C 70 2_9.5	9.5	19	—	—	—	—	—	38	97	95	—	—	—	—	60
C 70 2_10.2	10.2	24	—	—	—	—	—	43	102	100	109	—	—	—	65
C 70 2_11.2	11.2	15	—	—	—	—	—	34	94	91	—	—	—	—	56
C 70 2_13.0	13.0	17	—	—	—	—	—	36	95	93	—	—	—	—	58
C 70 2_14.1	14.1	9.9	—	—	12	12	14	29	88	86	—	—	—	—	51
C 70 2_15.3	15.3	14	—	—	—	—	—	33	93	90	—	—	—	—	55
C 70 2_16.7	16.7	6.9	—	—	9.5	9.4	11	26	85	83	—	—	—	—	48
C 70 2_19.3	19.3	9.1	—	—	12	12	13	28	87	85	—	—	—	—	50
C 70 2_22.9	22.9	6.4	—	—	9.0	8.9	10	25	85	83	—	—	—	—	48
C 70 2_27.7	27.7	5.2	—	—	8.0	7.9	9.2	24	84	81	—	—	—	—	46
C 70 2_34.7	34.7	3.2	—	—	6.1	6.0	7.3	22	82	79	—	—	—	—	44
C 70 3_41.3	41.3	4.4	—	—	7.2	7.2	8.5	23	83	80	—	—	—	—	46
C 70 3_44.7	44.7	4.2	—	—	7.0	7.0	8.2	23	83	80	—	—	—	—	45
C 70 3_52.2	52.2	3.0	—	—	5.8	5.8	7.0	22	81	79	—	—	—	—	44
C 70 3_56.5	56.5	2.8	—	—	5.7	5.6	6.9	22	81	79	—	—	—	—	44
C 70 3_65.9	65.9	2.0	—	—	4.9	4.8	6.1	21	80	78	—	—	—	—	43
C 70 3_71.3	71.3	2.0	—	—	4.8	4.8	6.0	21	80	78	—	—	—	—	43
C 70 3_81.4	81.4	1.5	—	—	4.3	4.3	5.6	20	80	78	—	—	—	—	43
C 70 3_88.2	88.2	1.4	—	—	4.3	4.2	5.5	20	80	76	—	—	—	—	43
C 70 3_103.8	103.8	1.0	—	—	3.8	3.8	5.1	20	79	77	—	—	—	—	42
C 70 3_112.4	112.4	0.90	—	—	3.8	3.7	5.0	20	79	77	—	—	—	—	42
C 70 3_126.8	126.8	0.70	—	—	3.5	3.5	4.8	20	79	77	—	—	—	—	42
C 70 3_137.4	137.4	0.70	—	—	3.5	3.5	4.7	20	79	77	—	—	—	—	42
C 70 3_150.3	150.3	0.50	—	—	3.4	3.4	9.6	—	—	—	—	—	—	—	42
C 70 3_162.8	162.8	0.50	—	—	3.4	3.4	4.6	—	—	—	—	—	—	—	42
C 70 3_179.2	179.2	0.40	—	—	3.2	3.3	4.5	—	—	—	—	—	—	—	42
C 70 3_194.1	194.1	0.40	—	—	3.2	3.2	4.5	—	—	—	—	—	—	—	42
C 70 3_220.9	220.9	0.30	—	—	3.1	3.1	4.3	—	—	—	—	—	—	—	41
C 70 3_239.3	239.3	0.30	—	—	3.1	3.1	4.3	—	—	—	—	—	—	—	41
C 70 4_251.3	251.3	0.70	2.2	2.2	3.5	3.5	4.8	20	—	—	—	—	—	—	11
C 70 4_272.2	272.2	0.70	2.2	2.1	3.5	3.5	4.8	20	—	—	—	—	—	—	11
C 70 4_317.9	317.9	0.50	2.0	2.0	3.4	3.3	4.6	19	—	—	—	—	—	—	11
C 70 4_344.3	344.3	0.50	2.0	2.0	3.4	3.3	4.6	19	—	—	—	—	—	—	11
C 70 4_409.4	409.4	0.40	1.8	1.8	3.2	3.2	4.5	19	—	—	—	—	—	—	7.9
C 70 4_443.5	443.5	0.40	1.8	1.8	3.2	3.2	4.5	19	—	—	—	—	—	—	7.9
C 70 4_512.0	512.0	0.30	1.7	1.7	3.1	3.1	4.4	19	—	—	—	—	—	—	7.8
C 70 4_554.7	554.7	0.30	1.7	1.7	3.1	3.1	4.4	19	—	—	—	—	—	—	7.8
C 70 4_606.8	606.8	0.20	1.7	1.7	3.1	3.0	4.3	—	—	—	—	—	—	—	7.8
C 70 4_657.3	657.3	0.20	1.7	1.7	3.1	3.0	4.3	—	—	—	—	—	—	—	7.7
C 70 4_736.0	736.0	0.20	1.6	1.6	3.0	2.9	4.3	—	—	—	—	—	—	—	7.7
C 70 4_797.3	797.3	0.20	1.6	1.6	3.0	2.9	4.3	—	—	—	—	—	—	—	7.7
C 70 4_922.6	922.6	0.10	1.6	1.6	3.0	2.9	4.2	—	—	—	—	—	—	—	7.7
C 70 4_999.5	999.5	0.10	1.6	1.6	3.0	2.9	4.2	—	—	—	—	—	—	—	7.6
C 70 4_1069	1069	0.80	1.6	1.5	2.9	2.9	4.2	—	—	—	—	—	—	—	7.6
C 70 4_1158	1158	0.80	1.6	1.5	2.9	2.9	4.2	—	—	—	—	—	—	—	7.6
C 70 4_1362	1362	0.60	1.5	1.5	2.9	2.9	4.1	—	—	—	—	—	—	—	7.6
C 70 4_1476	1476	0.60	1.5	1.5	2.9	2.9	4.1	—	—	—	—	—	—	—	7.6

C 80

	i	J (•10-4) [kgm2]													
			IEC												
			63	71	80	90	100 112	132	160	180	200	225	250	280	
C 80 2_5.6	5.6	—	—	—	—	—	—	—	—	197	211	489	—	—	164
C 80 2_6.1	6.1	—	—	—	—	—	—	—	—	193	210	485	—	—	159
C 80 2_7.0	7.0	—	—	—	—	—	—	—	160	161	174	452	—	—	127
C 80 2_7.6	7.6	—	—	—	—	—	—	—	158	158	172	449	—	—	124
C 80 2_8.9	8.9	—	—	—	—	—	—	—	137	135	146	429	—	—	101
C 80 2_9.6	9.6	—	—	—	—	—	—	—	136	133	144	427	—	—	99
C 80 2_11.1	11.1	38	—	—	—	—	—	56	116	113	124	408	—	—	79
C 80 2_12.0	12.0	36	—	—	—	—	—	55	115	112	123	407	—	—	78
C 80 2_13.8	13.8	28	—	—	—	—	—	47	106	104	135	398	—	—	69
C 80 2_14.9	14.9	27	—	—	—	—	—	46	106	103	134	397	—	—	69
C 80 2_16.7	16.7	21	—	—	—	—	—	40	100	97	127	391	—	—	63
C 80 2_18.1	18.1	21	—	—	—	—	—	40	99	97	127	390	—	—	62
C 80 2_20.5	20.5	14	—	—	17	17	18	33	93	90	120	383	—	—	55
C 80 2_22.2	22.2	14	—	—	16	16	18	33	92	90	120	383	—	—	55
C 80 2_24.0	24.0	13	—	—	16	16	17	32	91	89	119	382	—	—	54
C 80 2_25.9	25.9	13	—	—	16	15	17	32	91	89	118	382	—	—	54
C 80 2_31.3	31.3	8.7	—	—	12	11	13	28	87	85	—	—	—	—	50
C 80 2_39.1	39.1	5.2	—	—	8.0	8.0	9.2	24	84	81	—	—	—	—	46
C 80 3_43.5	43.5	9.6	—	—	12	12	14	29	88	86	—	—	—	—	51
C 80 3_47.4	47.4	9.1	—	—	12	12	13	28	87	85	—	—	—	—	50
C 80 3_57.3	57.3	5.7	—	—	8.5	8.5	9.7	25	84	82	—	—	—	—	47
C 80 3_62.5	62.5	5.4	—	—	8.2	8.2	9.5	24	84	82	—	—	—	—	47
C 80 3_70.5	70.5	4.3	—	—	7.1	7.0	8.3	23	83	80	—	—	—	—	45
C 80 3_76.9	76.9	4.1	—	—	7.0	6.9	8.2	23	82	80	—	—	—	—	45
C 80 3_89.3	89.3	3.0	—	—	5.9	5.8	7.1	22	81	79	—	—	—	—	44
C 80 3_97.4	97.4	2.9	—	—	5.8	5.7	7.0	22	81	79	—	—	—	—	44
C 80 3_109.5	109.5	2.0	—	—	4.8	4.8	6.1	21	80	78	—	—	—	—	43
C 80 3_119.5	119.5	1.9	—	—	4.8	4.7	6.0	21	80	79	—	—	—	—	43
C 80 3_136.7	136.7	1.4	—	—	4.3	4.2	5.5	20	80	78	—	—	—	—	43
C 80 3_149.1	149.1	1.4	—	—	4.2	4.2	5.5	20	80	77	—	—	—	—	43
C 80 3_169.0	169.0	1.0	—	—	3.9	3.8	5.1	20	80	77	—	—	—	—	42
C 80 3_184.4	184.4	1.0	—	—	3.9	3.8	5.1	20	80	77	—	—	—	—	42
C 80 3_197.9	197.9	0.80	—	—	3.7	3.6	4.9	—	—	—	—	—	—	—	42
C 80 3_215.8	215.8	0.80	—	—	3.6	3.6	4.9	—	—	—	—	—	—	—	42
C 80 4_261.9	261.9	1.7	—	—	4.6	4.5	5.8	21	—	—	—	—	—	—	12
C 80 4_285.7	285.7	1.7	—	—	4.6	4.5	5.8	21	—	—	—	—	—	—	12
C 80 4_334.3	334.3	1.2	2.7	2.7	4.0	4.0	5.3	20	—	—	—	—	—	—	11
C 80 4_364.7	364.7	1.2	2.7	2.6	4.0	4.0	5.3	20	—	—	—	—	—	—	11
C 80 4_417.5	417.5	0.90	2.4	2.3	3.7	3.7	5.0	20	—	—	—	—	—	—	11
C 80 4_455.4	455.4	0.90	2.3	2.3	3.7	3.7	5.5	20	—	—	—	—	—	—	11
C 80 4_529.3	529.3	0.50	2.0	2.0	3.4	3.3	4.6	19	—	—	—	—	—	—	11
C 80 4_577.4	577.4	0.50	2.0	2.0	3.4	3.3	4.6	19	—	—	—	—	—	—	11
C 80 4_664.3	664.3	0.40	2.0	1.9	3.3	3.2	4.5	19	—	—	—	—	—	—	11
C 80 4_724.7	724.7	0.40	2.0	1.9	3.3	3.2	4.5	19	—	—	—	—	—	—	11
C 80 4_783.4	783.4	0.30	2.0	1.8	3.2	3.1	4.4	—	—	—	—	—	—	—	9.4
C 80 4_854.6	854.6	0.30	2.0	1.8	3.2	3.1	4.4	—	—	—	—	—	—	—	9.4
C 80 4_945.7	945.7	0.20	1.7	1.7	3.1	3.0	4.3	—	—	—	—	—	—	—	9.3
C 80 4_1032	1032	0.20	1.7	1.7	3.1	3.0	4.3	—	—	—	—	—	—	—	9.3
C 80 4_1168	1168	0.20	1.6	1.6	3.0	3.0	4.2	—	—	—	—	—	—	—	9.2
C 80 4_1274	1274	0.20	1.6	1.6	3.0	3.0	4.2	—	—	—	—	—	—	—	9.2
C 80 4_1358	1358	0.10	1.6	1.6	3.0	2.9	4.2	—	—	—	—	—	—	—	9.2
C 80 4_1481	1481	0.10	1.6	1.6	3.0	2.9	4.2	—	—	—	—	—	—	—	9.2

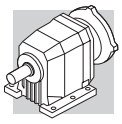

C 90

	i	J (•10-4) [kgm2]													
			IEC												
			63	71	80	90	100 112	132	160	180	200	225	250	280	
C 90 2_5.2	5.2	—	—	—	—	—	—	—	—	—	332	610	637	—	619
C 90 2_5.6	5.6	—	—	—	—	—	—	—	—	—	321	599	626	—	609
C 90 2_6.8	6.8	—	—	—	—	—	—	—	—	—	252	530	557	—	540
C 90 2_7.3	7.3	—	—	—	—	—	—	—	—	—	246	524	551	—	533
C 90 2_8.3	8.3	—	—	—	—	—	—	—	—	—	212	490	517	—	499
C 90 2_9.0	9.0	—	—	—	—	—	—	—	—	—	208	485	513	—	495
C 90 2_10.4	10.4	—	—	—	—	—	—	—	167	164	175	458	484	—	461
C 90 2_11.2	11.2	—	—	—	—	—	—	—	164	162	173	455	482	—	458
C 90 2_12.8	12.8	65	—	—	—	—	—	84	143	141	152	436	462	—	439
C 90 2_13.9	13.9	63	—	—	—	—	—	82	141	139	200	434	460	—	437
C 90 2_16.0	16.0	47	—	—	—	—	—	66	125	123	154	417	443	—	420
C 90 2_17.3	17.3	46	—	—	—	—	—	65	124	122	153	416	442	—	419
C 90 2_18.7	18.7	42	—	—	—	—	—	61	121	119	148	412	433	—	415
C 90 2_20.2	20.2	41	—	—	—	—	—	61	199	118	147	411	438	—	414
C 90 2_22.9	22.9	28	—	—	30	30	31	47	106	104	133	397	423	—	400
C 90 2_24.8	24.8	27	—	—	29	29	31	46	105	103	133	396	422	—	399
C 90 2_27.2	27.2	22	—	—	25	25	26	41	101	99	128	391	418	—	394
C 90 2_29.4	29.4	22	—	—	25	24	26	41	100	98	127	391	417	—	394
C 90 2_35.1	35.1	14	—	—	17	17	18	33	93	90	—	—	—	—	386
C 90 3_39.4	39.4	27	—	—	—	—	—	46	105	103	112	398	424	—	412
C 90 3_43.0	43.0	26	—	—	—	—	—	45	104	102	111	396	422	—	410
C 90 3_50.3	50.3	19	—	—	—	—	—	38	98	95	126	389	415	—	403
C 90 3_54.9	54.9	19	—	—	—	—	—	37	97	95	125	389	415	—	401
C 90 3_59.2	59.2	16	—	—	—	—	—	35	94	92	122	385	411	—	398
C 90 3_64.6	64.6	15	—	—	—	—	—	34	94	91	121	384	410	—	398
C 90 3_74.4	74.4	10	—	—	13	13	14	29	88	86	116	379	405	—	393
C 90 3_81.2	81.2	9.8	—	—	12	12	13	29	88	86	115	379	405	—	392
C 90 3_88.2	88.2	7.1	—	—	9.7	9.6	11	26	85	83	113	376	402	—	389
C 90 3_96.2	96.2	6.9	—	—	9.4	9.4	11	26	85	83	112	376	402	—	389
C 90 3_107.0	107.0	5.7	—	—	8.4	8.4	9.6	25	84	82	—	—	—	—	388
C 90 3_116.7	116.7	5.5	—	—	8.3	8.2	9.5	24	84	82	—	—	—	—	388
C 90 3_134.1	134.1	3.5	—	—	6.4	6.3	7.6	22	82	80	—	—	—	—	386
C 90 3_146.3	146.3	3.4	—	—	6.3	6.2	7.5	22	82	80	—	—	—	—	386
C 90 3_157.8	157.8	2.5	—	—	5.4	5.3	6.6	21	81	79	—	—	—	—	385
C 90 3_172.1	172.1	2.4	—	—	5.3	5.2	6.5	21	81	79	—	—	—	—	385
C 90 4_212.4	212.4	4.2	—	—	7.0	7.0	8.3	23	83	80	—	—	—	—	14
C 90 4_231.7	231.7	4.1	—	—	7.0	6.9	8.2	23	82	80	—	—	—	—	14
C 90 4_268.5	268.5	2.8	—	—	5.7	5.6	6.9	22	81	79	—	—	—	—	13
C 90 4_292.9	292.9	2.8	—	—	5.7	2.6	6.9	22	81	79	—	—	—	—	13
C 90 4_339.0	339.0	2.0	3.4	3.4	4.8	4.8	6.0	21	80	78	—	—	—	—	12
C 90 4_369.8	369.8	2.0	3.4	3.4	4.8	4.8	6.0	21	80	78	—	—	—	—	12
C 90 4_419.0	419.0	1.4	2.9	2.9	4.3	4.2	5.5	20	80	78	—	—	—	—	12
C 90 4_457.1	457.1	1.4	2.9	2.9	4.3	4.2	5.5	20	80	78	—	—	—	—	12
C 90 4_534.2	534.2	0.90	2.4	2.4	3.8	3.7	5.0	20	79	77	—	—	—	—	11
C 90 4_582.8	582.8	0.90	2.4	2.4	3.8	3.7	5.0	20	79	77	—	—	—	—	11
C 90 4_652.8	652.8	0.70	2.1	2.1	3.5	3.5	4.7	20	79	77	—	—	—	—	11
C 90 4_712.2	712.2	0.70	2.1	2.1	3.5	3.5	4.7	20	79	77	—	—	—	—	11
C 90 4_773.6	773.6	0.50	2.0	2.0	3.4	3.3	4.6	—	—	—	—	—	—	—	9.7
C 90 4_844.0	844.0	0.50	2.0	2.0	3.4	3.3	4.6	—	—	—	—	—	—	—	9.6
C 90 4_922.3	922.3	0.40	1.8	1.8	3.2	3.2	4.5	—	—	—	—	—	—	—	9.5
C 90 4_1006	1006	0.40	1.8	1.8	3.2	3.2	4.5	—	—	—	—	—	—	—	9.4
C 90 4_1137	1137	0.30	1.7	1.7	3.1	3.0	4.3	—	—	—	—	—	—	—	9.3
C 90 4_1240	1240	0.30	1.7	1.7	3.1	3.0	4.3	—	—	—	—	—	—	—	9.3

C 100

	i	J (•10-4) [kgm2]													
			IEC												
			63	71	80	90	100 112	132	160	180	200	225	250	280	
C 100 2_4.9	4.9	—	—	—	—	—	—	—	—	—	674	960	987	970	972
C 100 2_5.3	5.3	—	—	—	—	—	—	—	—	—	647	933	960	943	944
C 100 2_6.5	6.5	—	—	—	—	—	—	—	—	—	481	767	794	777	778
C 100 2_7.1	7.1	—	—	—	—	—	—	—	—	—	465	751	778	761	763
C 100 2_8.4	8.4	—	—	—	—	—	—	—	—	—	365	651	678	660	662
C 100 2_9.0	9.0	—	—	—	—	—	—	—	—	—	355	641	668	651	653
C 100 2_10.1	10.1	—	—	—	—	—	—	—	—	—	291	577	604	587	589
C 100 2_10.9	10.9	—	—	—	—	—	—	—	—	—	285	570	597	580	582
C 100 2_12.5	12.5	—	—	—	—	—	—	—	224	222	233	521	550	539	529
C 100 2_13.5	13.5	—	—	—	—	—	—	—	220	218	228	517	545	532	524
C 100 2_15.2	15.2	122	—	—	—	—	—	82	141	200	199	472	499	528	514
C 100 2_16.5	16.5	119	—	—	—	—	—	138	197	195	206	496	525	511	504
C 100 2_18.7	18.7	97	—	—	—	—	—	116	175	173	203	474	501	488	480
C 100 2_20.2	20.2	95	—	—	—	—	—	114	173	171	201	471	499	486	478
C 100 2_22.2	22.2	73	—	—	—	—	—	92	102	150	179	448	477	463	456
C 100 2_24.1	24.1	72	—	—	—	—	—	91	150	148	178	447	476	462	455
C 100 2_29.6	29.6	50	—	—	—	—	54	69	129	127	156	425	454	440	433
C 100 3_34.3	34.3	—	—	—	—	—	—	—	148	146	155	439	465	471	461
C 100 3_36.9	36.9	—	—	—	—	—	—	—	145	143	152	436	462	468	458
C 100 3_42.9	42.9	44	—	—	—	—	—	63	123	120	130	415	441	451	437
C 100 3_46.2	46.2	43	—	—	—	—	—	61	121	118	128	413	439	452	435
C 100 3_53.3	53.3	33	—	—	—	—	—	51	111	109	139	403	429	432	424
C 100 3_57.4	57.4	31	—	—	—	—	—	50	110	107	138	401	427	431	423
C 1003_64.5	64.5	24	—	—	—	—	—	43	103	101	130	394	420	422	415
C 100 3_69.4	69.4	24	—	—	—	—	—	43	102	100	129	393	419	421	414
C 100 3_79.4	79.4	16	—	—	—	—	20	35	95	92	122	385	411	413	407
C 100 3_85.6	85.6	16	—	—	—	—	19	35	94	92	121	385	411	413	406
C 100 3_92.7	92.7	15	—	—	—	—	18	34	93	91	120	384	410	412	405
C 100 3_99.8	99.8	14	—	—	—	—	18	33	93	90	119	383	409	411	404
C 100 3_111.9	111.9	9.9	—	—	—	—	14	29	88	86	—	—	—	—	392
C 100 3_120.5	120.5	9.6	—	—	—	—	14	29	88	86	—	—	—	—	392
C 100 3_139.7	139.7	6.0	—	—	—	—	10	25	84	82	—	—	—	—	388
C 100 3_150.4	150.4	5.8	—	—	—	—	9.8	25	84	82	—	—	—	—	388
C 100 4_162.1	162.1	13	—	—	16	16	17	32	100	89	—	—	—	—	23
C 100 4_185.4	185.4	9.6	—	—	13	12	14	29	88	86	—	—	—	—	20
C 100 4_199.6	199.6	8.5	—	—	12	12	14	28	88	86	—	—	—	—	20
C 100 4_244.2	244.2	5.7	—	—	8.5	8.5	9.8	25	84	82	—	—	—	—	16
C 100 4_263.0	263.0	5.6	—	—	8.5	8.4	9.7	25	84	82	—	—	—	—	16
C 100 4_300.5	300.5	4.2	—	—	7.1	7.1	8.4	23	83	80	—	—	—	—	15
C 100 4_323.6	323.6	4.2	—	—	7.1	7.0	8.3	23	83	80	—	—	—	—	14
C 100 4_380.5	380.5	3.1	4.5	4.5	5.9	5.5	7.1	22	81	79	—	—	—	—	13
C 100 4_409.8	409.8	3.0	4.5	4.5	5.9	5.5	7.1	22	81	79	—	—	—	—	13
C 100 4_466.7	466.7	2.0	3.5	3.5	4.9	4.8	6.1	20	80	78	—	—	—	—	12
C 100 4_502.6	502.6	2.0	3.5	3.4	4.8	4.8	6.1	20	80	78	—	—	—	—	12
C 100 4_582.6	582.6	1.4	2.9	2.9	4.3	4.2	5.5	20	80	77	—	—	—	—	12
C 100 4_627.4	627.4	1.4	2.9	2.9	4.3	4.2	5.5	20	80	77	—	—	—	—	12
C 100 4_720.3	720.3	1.0	2.5	2.5	3.9	3.4	5.1	20	79	77	—	—	—	—	11
C 100 4_775.7	775.7	1.0	2.5	2.5	3.9	3.4	5.1	20	79	77	—	—	—	—	11
C 100 4_843.3	843.3	0.80	2.3	2.3	3.7	3.6	4.9	—	—	—	—	—	—	—	9.9
C 100 4_908.2	908.2	0.80	2.3	2.3	3.7	3.6	4.9	—	—	—	—	—	—	—	9.9
C 100 4_1004	1004	0.60	2.1	2.0	3.4	3.4	4.7	—	—	—	—	—	—	—	9.7
C 100 4_1081	1081	0.60	2.1	2.0	3.4	3.4	4.7	—	—	—	—	—	—	—	9.7

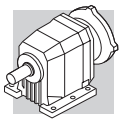

29 EXAKTE ÜBERSETZUNG

i_N	C12	C22	C32	C36	C41	C51	C61	C70	C80	C90	C100
2.5						2.62895					
2.8	2.76731	2.72212	2.87879	2.68687	2.65909		2.82011				
3.2	3.20743	3.32609		3.18182		3.30758					
3.5	3.65132	3.70709	3.40909	3.48617	3.61111		3.69925				
4.0			3.73518	4.20000							
4.5	4.31203	4.25831	4.50000	4.62201	4.66304	4.45370	4.55556	4.57143			
5.0	4.86842	4.76902	4.95215	5.27807						5.17231	4.92308
5.6	5.59868	5.59006	5.65508	5.84659	5.95263	5.63043		5.85034	5.64103	5.60333	5.33333
6.3	6.23158	6.08696	6.26420		6.36364		6.00176 6.74074	6.25455	6.11111	6.75824	6.52308
7.1		7.08300	7.16498	6.78114	7.06612	6.98684	7.48485	7.46032	7.04000	7.32143	7.06667
8.0	7.62201		8.48485	8.03030		7.75120		8.00433	7.62667	8.32615	8.35165
9.0	8.83422	8.65455	9.29644	8.79842	8.64198	8.79040	8.84211	9.52381	8.86447	9.02000	9.04762
10.0	10.05682	9.64593		10.60000	9.59596	9.75207	9.81818	10.20707	9.60317	10.36264	10.09231
11.2		11.08021	11.20000	11.66507	11.15942	11.83642	10.88889	11.20879	11.09402	11.22619	10.93333
12.5	11.87662	12.40909	12.32536	13.32086	12.39130	13.13131	12.09091	13.03030	12.01852	12.79060	12.45421
14.0	13.40909	14.54545	14.07487	14.75568	14.24561	14.96377	14.34568	14.09524	13.76410 14.91111	13.85648	13.49206
16.0	15.42045	15.83838	15.59091		15.81818	16.60079	15.92929	15.33566 16.70330	16.66272	15.97949	15.21368 16.48148
18.0	17.16364 18.38961	18.13636	18.18182	17.20779	17.79167	18.89035	17.65217		18.05128	17.31111 18.68047	18.66667
20.0	20.62937	20.02424	20.08081	19.00505	19.75568	20.95694 21.81606	19.60079	19.28485	20.53333	20.23718	20.22222
22.4	23.24242	21.45455	22.90909	22.13187	22.55556	23.35417 23.89242	22.35088	22.85315	22.24444	22.91795	22.24852
25.0	25.35537	24.27972	25.11515	26.20879	25.04545	25.90909	24.81818 26.77895		23.95266 25.94872	24.82778	24.10256
28.0	29.50000	27.15152 29.61983	26.90909	28.71572	28.31111 28.49003	27.44759 29.77315	27.41667 29.35385	27.71901		27.17160 29.43590	29.55556
31.5	32.77778	33.09091	29.76224 33.09091		31.22945 31.43636	30.05994 33.03030	30.44318 32.97778		31.33333		
35.5	37.00909	36.76768	36.09917	34.59560	33.38462 36.78930	36.38333 36.95862	34.22222 36.14872	34.74747		35.09848	34.29705 36.93529
40.0	42.31313		40.72727	38.07172	37.06993 40.32673	40.36364 40.47619	38.00000	41.26263	39.11111	39.40239	42.92328
45.0		43.27273	45.25253	43.47576	44.75207 46.96356	43.11538 46.72360	43.44691	44.70118	43.49074	42.98443	46.22507
50.0	47.60227	48.64646	52.43636	48.15865	51.47929	47.83217 51.40152	47.62450	52.16479	47.44444	50.30093	53.25397
56.0	55.16883	54.72727	59.39394	56.16170	58.65385	57.02479 58.98416	53.46087 58.60134	56.51186	57.29733	54.87374 59.20032	57.35043
63.0	66.15152	60.00000 63.27273	66.81818	62.02747	64.29364	64.59803		65.85315	62.50617	64.58217	64.46886
71.0		65.33333 74.81250	74.74747	70.76374	74.35897	72.92219	67.69123 74.20000	71.34091	70.50362	74.44537	69.42801
80.0		82.60000	82.55443	77.57802 83.11931	81.50888	79.86264	83.03333	81.41434	76.91304	81.21313	79.44444
90.0		88.50000	94.18182	91.93238	93.33333	92.96514	91.01731	88.19886	89.27047	88.22009	85.55556 92.67399
100.0		100.15385	103.25118	102.21429	102.30769	101.81319	103.64444	103.79138	97.38596	96.24009	99.80276

2x 3x

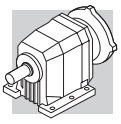

i_N	C12	C22	C32	C36	C41	C51	C61	C70	C80	C90	C100
112.2		112.00000	110.62626	111.50649	110.05917	113.60510	113.61026	112.44066	109.50347	107.00379 116.73140	111.90476
125.5		122.18182	122.35587	125.80220	120.64178	124.41758	128.14222	126.83497	119.45833		120.51282
140.0		136.50000	136.04040 148.40771	139.78022	132.86713 145.64282	134.62559 147.43872	140.46359	137.40455	136.68519 149.11111	134.13580 146.32997	139.68254
160.0		151.66667	167.43434	161.97033	164.10256	160.49861	150.03077 164.45680	150.30339 162.82867	168.99259	157.76199	150.42735 162.10526
180.0		178.50000	186.03816	183.46154	179.88166	175.77423	178.59394	179.18945	184.35556	172.10399	185.37037
200.0		200.66667		206.39423	190.76923 209.11243	197.87075	195.76643	194.12190	197.85897	212.38169	199.62963
225.0		225.75000	215.57172	230.88697		216.70330	217.40754	220.91375	215.84615	231.68911	
250.0		261.00000	244.17508	255.00183	239.94755	240.85197 263.77530	238.31211	239.32323 251.28438	261.85613	268.49591	244.21811 263.00412
280.0			274.69697	290.91758	263.01943		275.27766	272.22475	285.66123	292.90463	300.50725
315.0				318.93187	304.19580 333.44540	297.76563 326.10577	301.74667	317.86109	334.27376	338.95085	323.62319
355.0				341.71272			337.66889 370.13705	344.34951	364.66228	369.76457	380.49708
400.0				377.94421 420.21429	381.81818 418.53147	379.60764 415.73718	421.48741	409.39931	417.48199	419.04541	409.76608
450.0				458.41558	450.24207	463.88750	462.01504	443.51592	455.43490	457.14044	466.73611
500.0				517.18681	493.53457	508.03846	521.11170	512.03745	529.26678		502.63889
560.0				574.65201	543.54736	549.72115	571.21860	554.70724	577.38194	534.22163 582.78723	582.59259
630.0				665.87802	595.81153	602.04142 655.36932	610.12513 668.79101	606.78035 657.34538	664.32106	652.82863	627.40741
710.0				754.23077	671.32867 735.87951	717.74476	726.28202	735.97521	724.71389	712.17669	720.29630
800.0				848.50962	780.41958	807.97222	796.11683	797.30647	783.37099	773.62229 843.95159	775.70370 843.33333
900.0					855.45992	884.87179		922.59000	854.58654 945.71181	922.30089	908.20513
1000.0								999.47250 1069.05117	1031.68561	1006.14643	1003.88889
1125.0								1158.13876	1168.03704	1137.05888	1081.11111
1250.0									1274.22222	1240.42787	
1400.0								1362.26180 1475.78362	1357.84306 1481.28333		

3x 4x

C 05...M

P

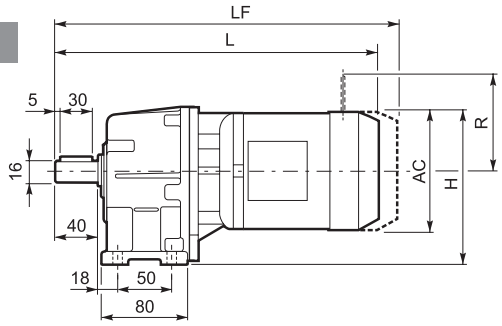

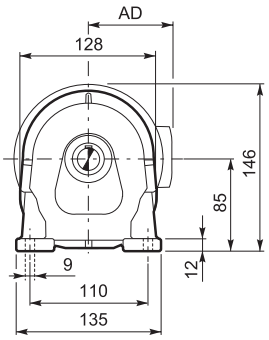

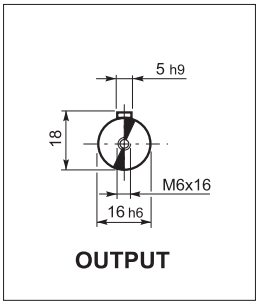

F

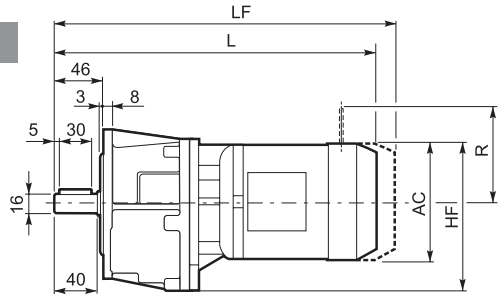

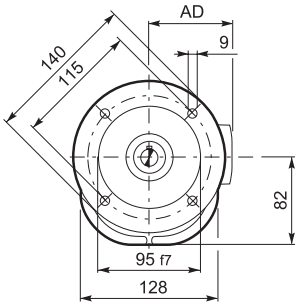

									M...FD M...FA		M...FD		M...FA	
			AC	H	HF	L	AD	Kg	LF	Kg	R	AD	R	AD
C 05 2	**S0**	**M0**	110	140	137	287	91	7	—	—	—	—	—	—
C 05 2	**S05**	**M05**	121	145.5	142.5	332	95	8	398	10	96	122	116	95
C 05 2	**S1**	**M1**	138	154	151	360.5	108	11	423	13	103	135	124	108

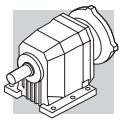

C 12...M/ME

P

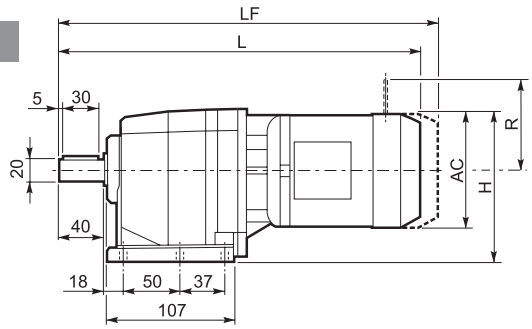

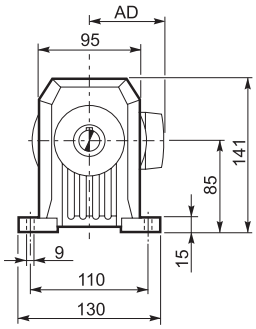

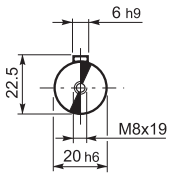

OUTPUT

F

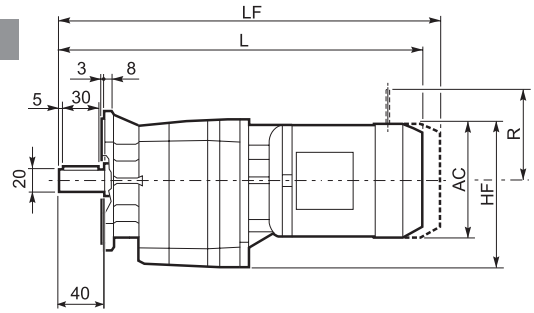

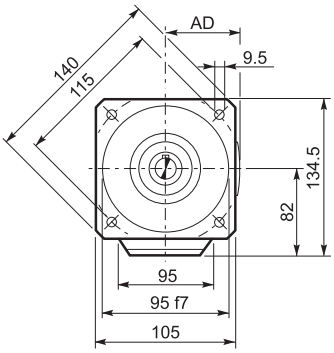

U

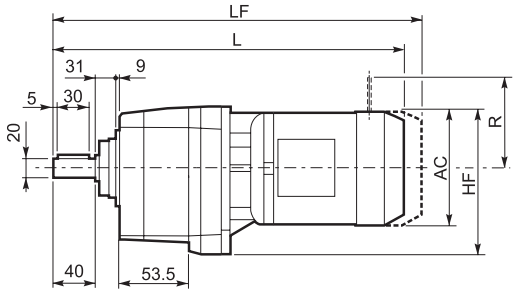

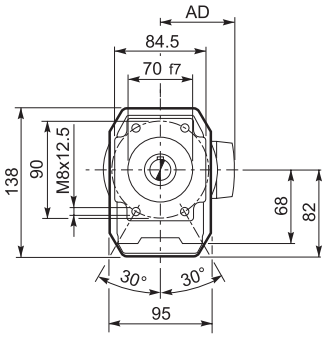

UF

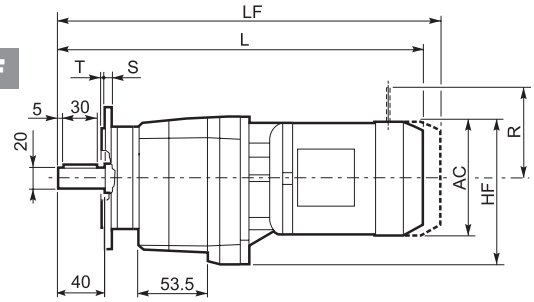

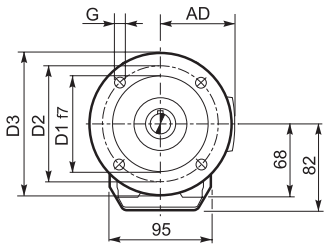

C 12 2_U	D1	D2	D3	G	T	S
FA	80	100	120	7	3	8
FB	95	115	140	9	3	10
FC	110	130	160	9	3	10

									M...FD M...FA		M...FD		M...FA	
			AC	H	HF	L	AD	Kg	LF	Kg	R	AD	R	AD
C 12 2	**S05**	**M05**	121	145.5	142.5	370.5	95	9	436.5	10	96	122	116	95
C 12 2	**S1**	**M1**	138	154	151	404.5	108	11	460.5	13	103	135	124	108
C 12 2	**S2**	**M2S**	156	163	160	428.5	119	15	498.5	18	129	146	134	119
C 12 2	**S2**	**ME2S**	156	163	160	428.5	119	15	—	—	—	—	—	—
C 12 2	**S3**	**ME3S**	195	182.5	179.5	471.5	142	21.5	—	—	—	—	—	—
C 12 2	**S3**	**ME3L**	195	182.5	179.5	503.5	142	22	—	—	—	—	—	—

C 12...P (IEC)

P

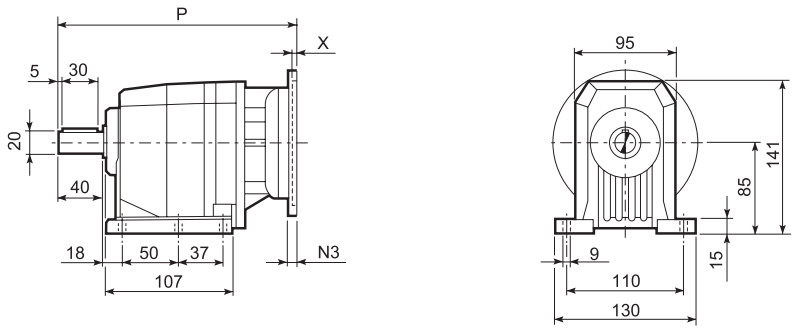

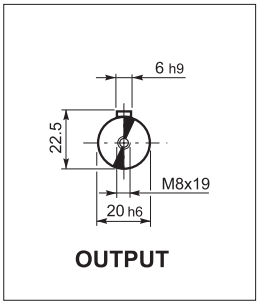

F

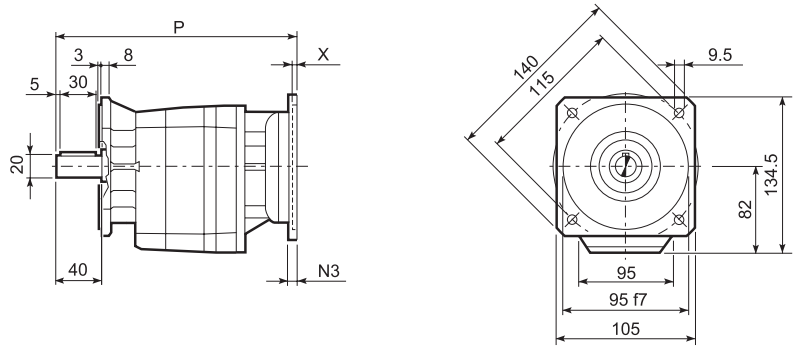

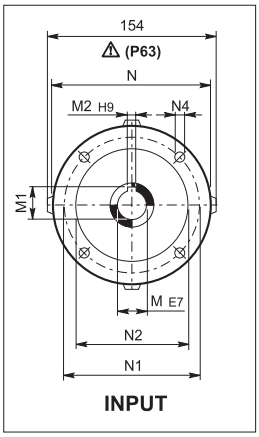

U

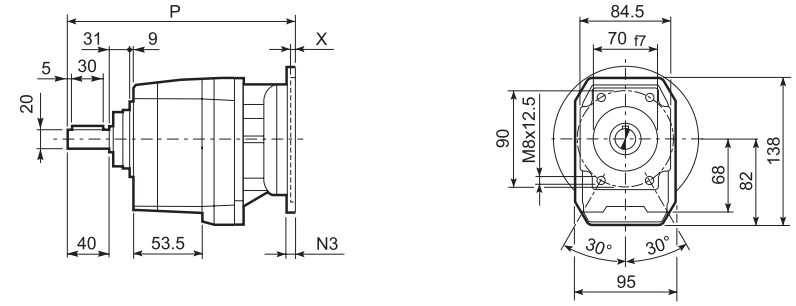

UF

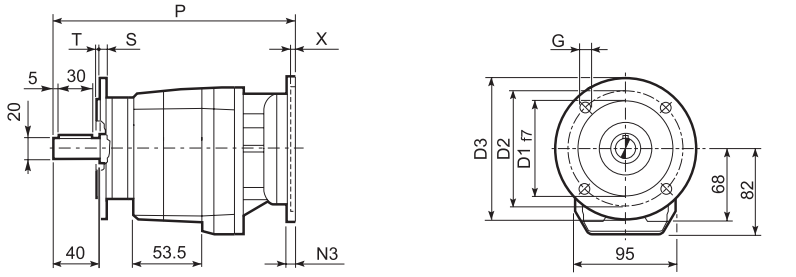

C 12 2_U						
	D1	D2	D3	G	T	S
FA	80	100	120	7	3	8
FB	95	115	140	9	3	10
FC	110	130	160	9	3	10

		M	M1	M2	N	N1	N2	N3	N4	X	P	Kg
C 12 2	P63	11	12.8	4	140	115	95	—	M8x19	4	244.5	6
C 12 2	P71	14	16.3	5	160	130	110	—	M8x16	4.5	244.5	6
C 12 2	P80	19	21.8	6	200	165	130	—	M10x12	4	264	7
C 12 2	P90	24	27.3	8	200	165	130	—	M10x12	4	264	7
C 12 2	P100	28	31.3	8	250	215	180	—	M12x16	4.5	274	11
C 12 2	P112	28	31.3	8	250	215	180	—	M12x16	4.5	274	11

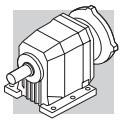

C 12...SK / SC

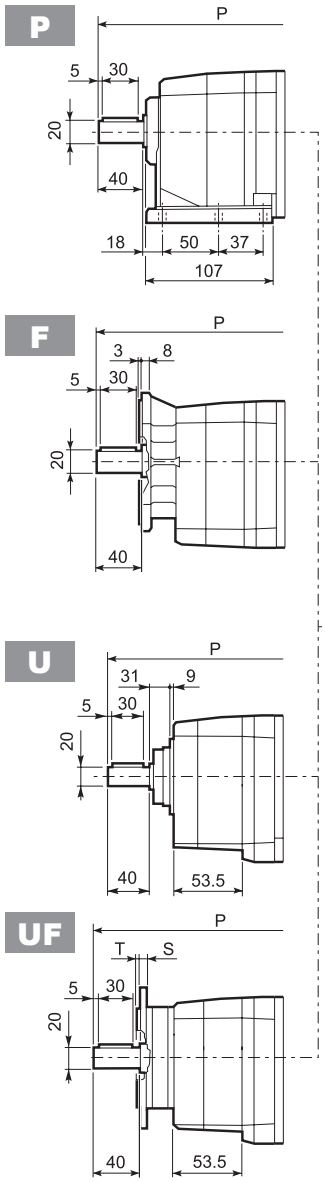

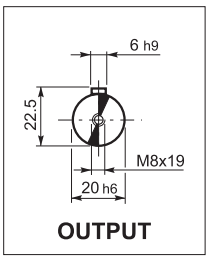

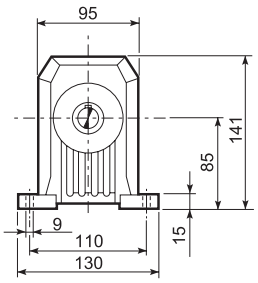

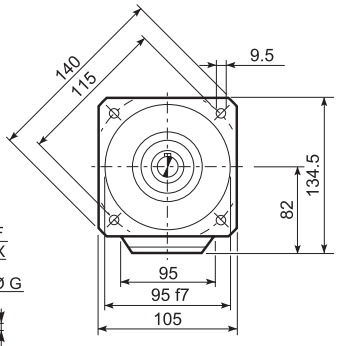

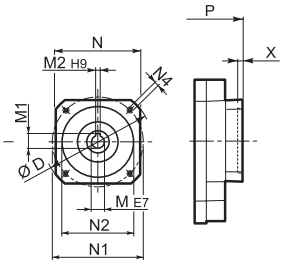

SK...

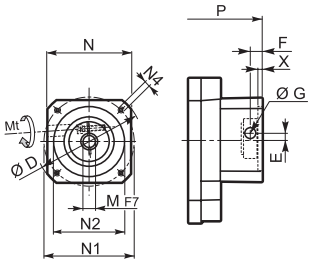

SC...

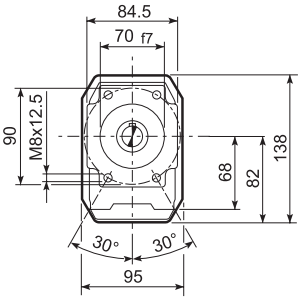

C 12 2_U	D1	D2	D3	G	T	S
FA	80	100	120	7	3	8
FB	95	115	140	9	3	10
FC	110	130	160	9	3	10

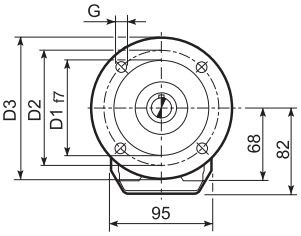

		D	M	M1	M2	N	N1	N2	N4	X	P	Kg
C 12 2	SK60A	102	11	12.8	4	82	75	60	M5x10	3.5	216	6
C 12 2	SK60B	102	14	16.3	5	82	75	60	M5x10	4	223	5
C 12 2	SK80A	115	14	16.3	5	90	100	80	M6x12	4	223	5
C 12 2	SK80C	120	19	21.8	6	96	100	80	M6x12	4	264	7
C 12 2	SK95A	130	14	16.3	5	102	115	95	M8x12	4	264	6
C 12 2	SK95B	130	19	21.8	6	102	115	95	M8x12	4	264	7
C 12 2	SK95C	130	24	27.3	8	102	115	95	M8x12	4	264	7
C 12 2	SK110A	150	19	21.8	6	120	130	110	M8x12	5	264	7
C 12 2	SK110B	150	24	27.3	8	120	130	110	M8x12	5	264	7

			Mt [Nm]	D	E	F	G	M	N	N1	N2	N4	X	P	Kg
C 12 2	SC60A	M6	15	102	7	12.5	12.5	11	82	75	60	M5x10	4	243	7
C 12 2	SC60B	M6	15	102	7	12.5	12.5	14	82	75	60	M5x10	4	243	6
C 12 2	SC80A	M6	15	115	6	12.5	12.5	14	90	100	80	M6x12	4	243	6
C 12 2	SC80C	M6	15	120	15.5	14.5	17.75	19	96	100	80	M6x12	4	287.5	8
C 12 2	SC95A	M6	15	130	16.5	15	17.75	14	102	115	95	M8x16	4	287.5	7
C 12 2	SC95B	M6	15	130	16.5	15	17.75	19	102	115	95	M8x16	4	287.5	8
C 12 2	SC95C	M6	15	130	16.5	15	17.75	24	102	115	95	M8x16	4	287.5	8
C 12 2	SC110A	M6	15	150	16.5	16	17.75	19	120	130	110	M8x16	5	287.5	10
C 12 2	SC110B	M6	15	150	16.5	16	17.75	24	120	130	110	M8x16	5	287.5	10

C 12...HS

P

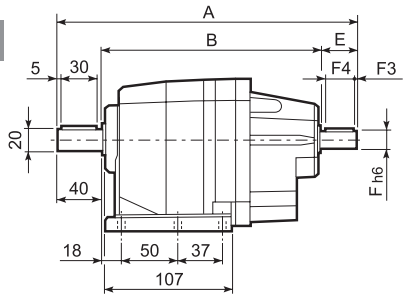

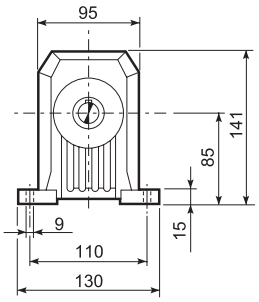

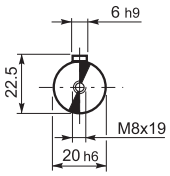

OUTPUT

F

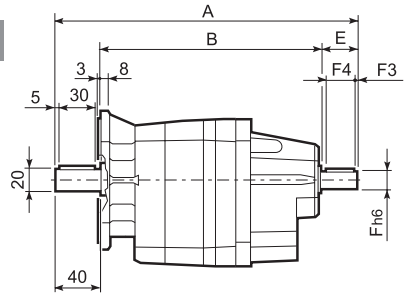

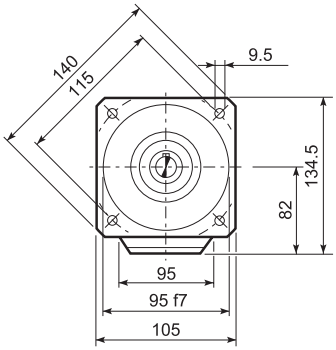

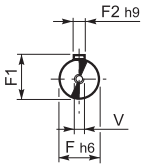

INPUT

U

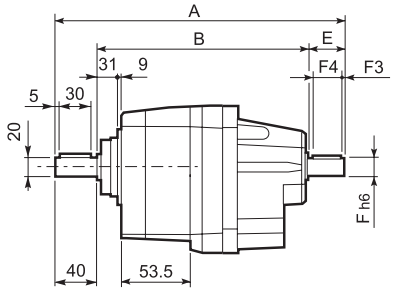

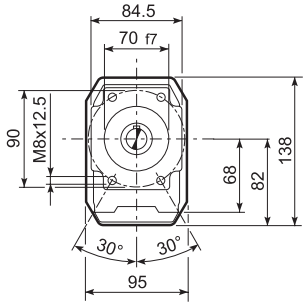

UF

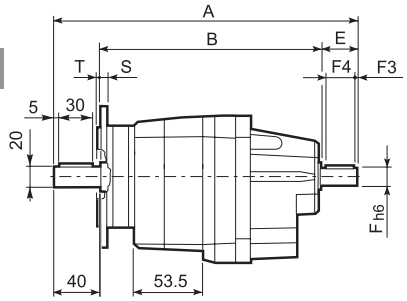

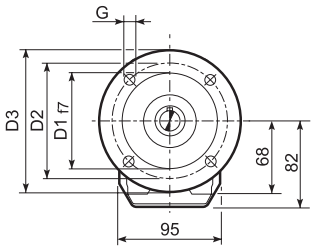

C 12 2_U						
	D1	D2	D3	G	T	S
FA	80	100	120	7	3	8
FB	95	115	140	9	3	10
FC	110	130	160	9	3	10

		A	B	E	F	F1	F2	F3	F4	V	Kg
C 12 2	HS	251.5	171.5	40	16	18	5	2.5	35	M6x16	7.8

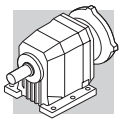

C 22...M/ME

P

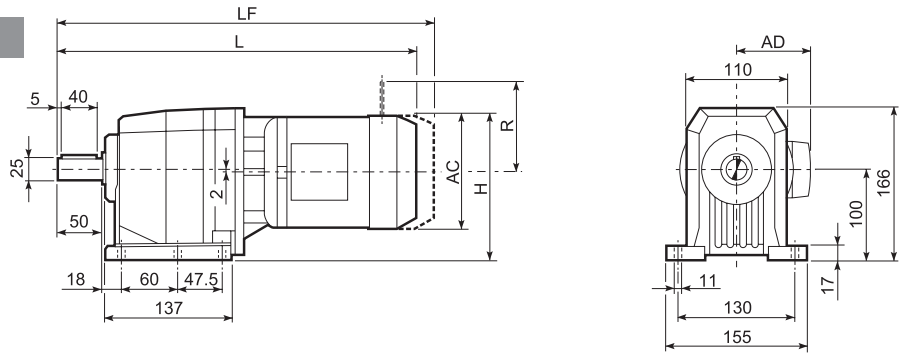

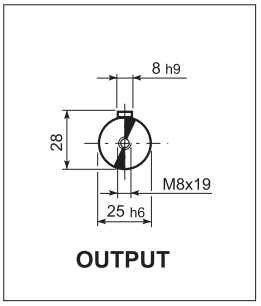

F

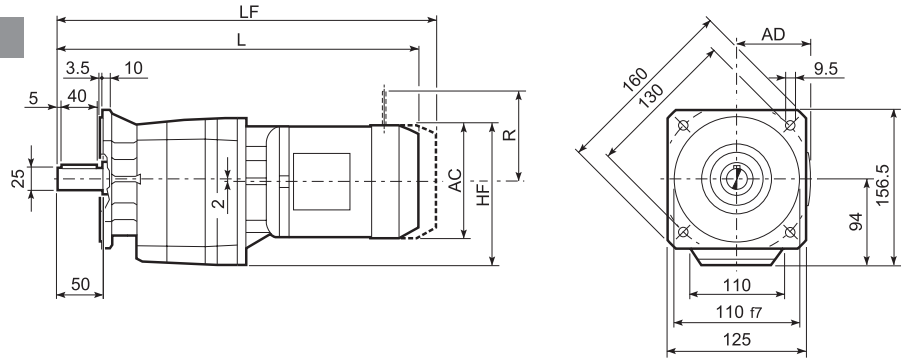

U

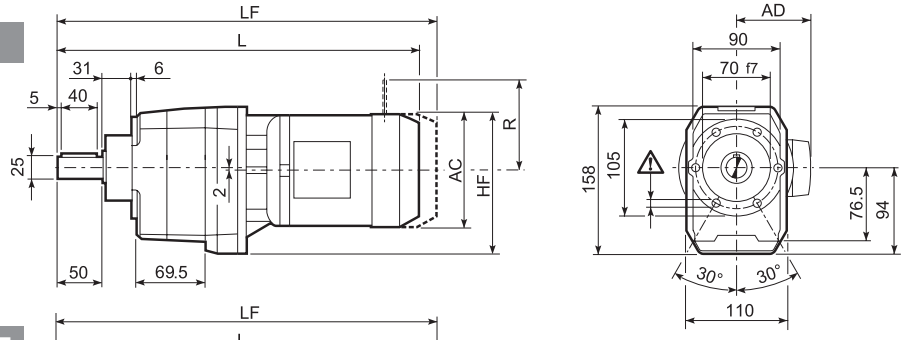

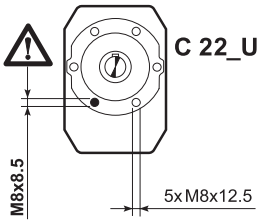

UF

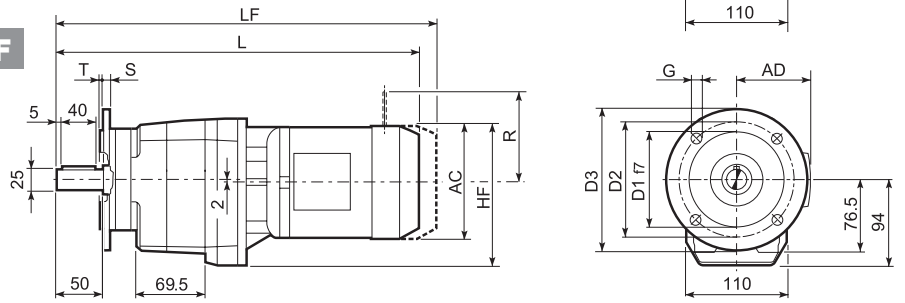

C 22_U						
	D1	D2	D3	G	T	S
FA	95	115	140	9	3	10
FB	110	130	160	9	3	10
FC	130	165	200	11	3.5	11

									M...FD M...FA		M...FD		M...FA	
			AC	H	HF	L	AD	Kg	LF	Kg	R	AD	R	AD
C 22 2	S05	M05	121	160.5	154.5	399	95	8	465	10	96	119	116	95
C 22 2	S1	M1	138	169	163	428	108	11	489	14	103	135	124	108
C 22 2	S2	M2S	156	178	170	456	119	16	527	19	129	146	134	119
C 22 2	S2	ME2S	156	178	170	456	119	16	—	—	—	—	—	—
C 22 2	S3	ME3S	195	197.5	191.5	500	142	22.5	—	—	—	—	—	—
C 22 2	S3	ME3L	195	197.5	191.5	532	142	27	—	—	—	—	—	—
C 22 3	S05	M05	121	160.5	154.5	454.5	95	11	520.5	12	96	122	116	95
C 22 3	S1	M1	138	169	163	483.5	108	13	544.5	15	103	135	124	108
C 22 3	S2	ME2S	156	178	170	511.5	119	18	—	—	—	—	—	—
C 22 3	S3	ME3S	195	197.5	191.5	555.5	142	24.5	—	—	—	—	—	—
C 22 3	S3	ME3L	195	197.5	191.5	587.5	142	29	—	—	—	—	—	—

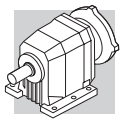

C 22...P(IEC)

P

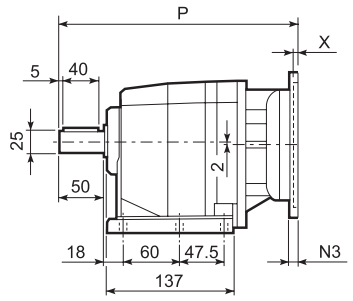

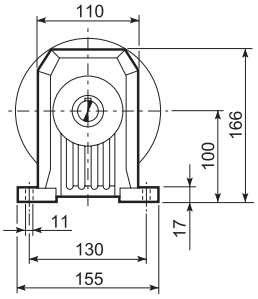

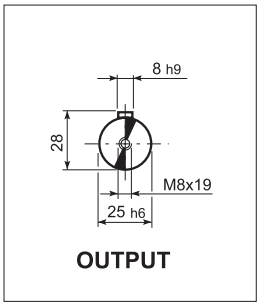

F

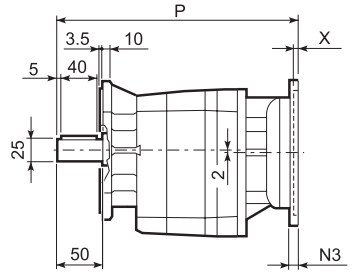

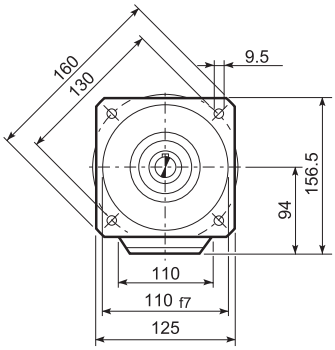

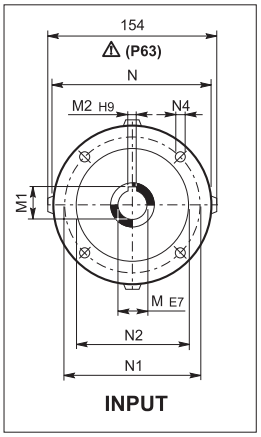

U

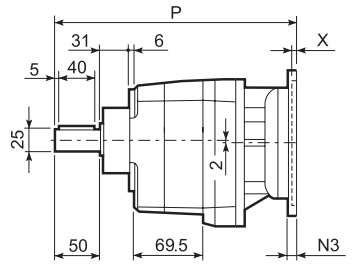

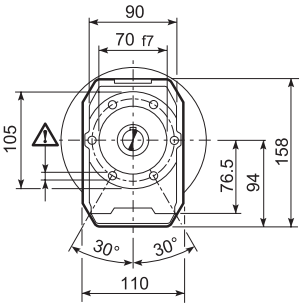

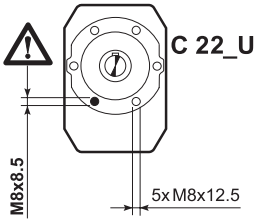

UF

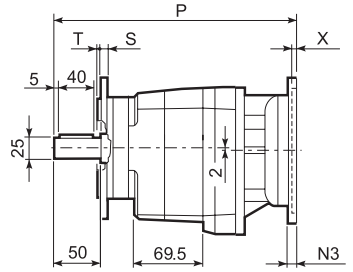

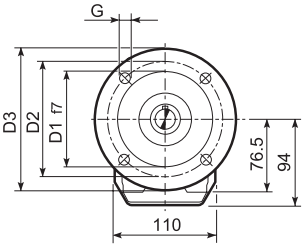

C 22_U						
	D1	D2	D3	G	T	S
FA	95	115	140	9	3	10
FB	110	130	160	9	3	10
FC	130	165	200	11	3.5	11

		M	M1	M2	N	N1	N2	N3	N4	X	P	Kg
C 22 2	**P63**	11	12.8	4	140	115	95	—	M8x19	4	273	7
C 22 2	**P71**	14	16.3	5	160	130	110	—	M8x16	4.5	273	7
C 22 2	**P80**	19	21.8	6	200	165	130	—	M10x12	4	292.5	8
C 22 2	**P90**	24	27.3	8	200	165	130	—	M10x12	4	292.5	8
C 22 2	**P100**	28	31.3	8	250	215	180	—	M12X16	4.5	302.5	12
C 22 2	**P112**	28	31.3	8	250	215	180	—	M12X16	4.5	302.5	12
C 22 3	**P63**	11	12.8	4	140	115	95	—	M8x19	4	328.5	8
C 22 3	**P71**	14	16.3	5	160	130	110	—	M8x16	4.5	328.5	8
C 22 3	**P80**	19	21.8	6	200	165	130	—	M10x12	4	348	9
C 22 3	**P90**	24	27.3	8	200	165	130	—	M10x12	4	348	9
C 22 3	**P100**	28	31.3	8	250	215	180	—	M12x16	4.5	358	13
C 22 3	**P112**	28	31.3	8	250	215	180	—	M12x16	4.5	358	13

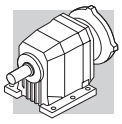

C 22...SK / SC

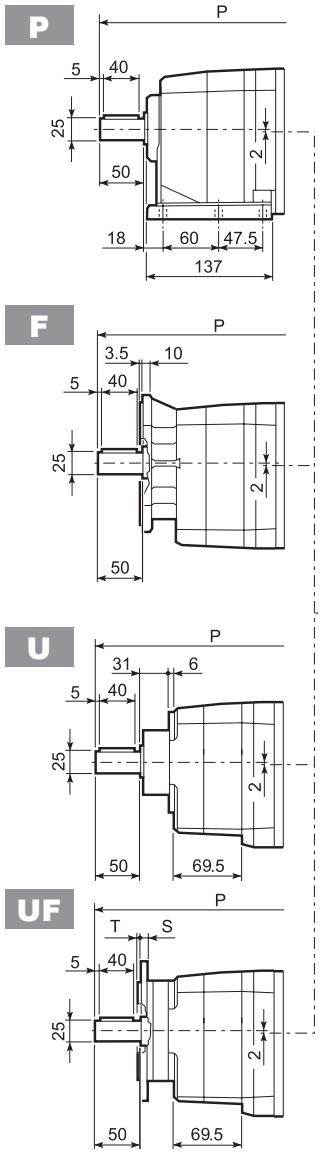

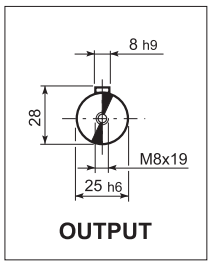

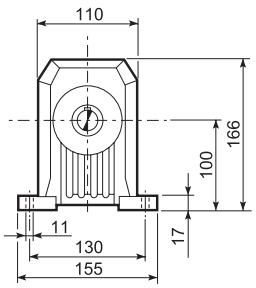

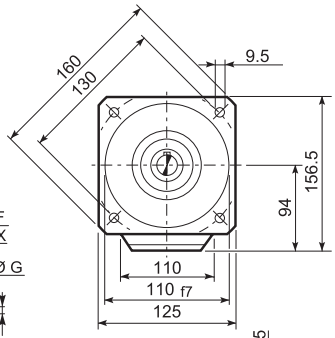

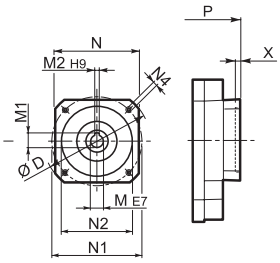

SK...

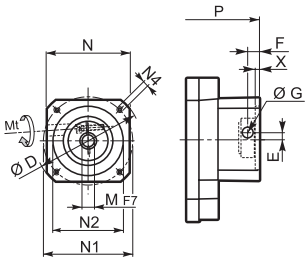

SC...

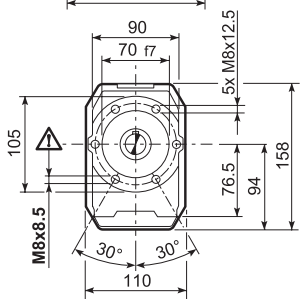

C 22_U						
	D1	D2	D3	G	T	S
FA	95	115	140	9	3	10
FB	110	130	160	9	3	10
FC	130	165	200	11	3.5	11

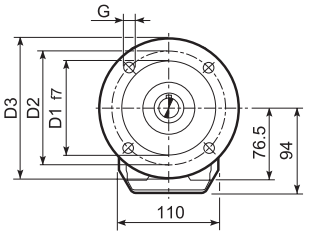

		D	M	M1	M2	N	N1	N2	N4	X	P 2x	P 3x	Kg
C 22 2/3	SK60A*	102	11	12.8	4	82	75	60	M5x10	3.5	224.5	300	6/9
C 22 2/3	SK60B*	102	14	16.3	5	82	75	60	M5x10	4	251.5	307	7/8
C 22 2/3	SK80A*	115	14	16.3	5	90	100	80	M6x12	4	251.5	307	7/8
C 22 2/3	SK80C	120	19	21.8	6	96	100	80	M6x12	4	292.5	348	8/9
C 22 2/3	SK95A	130	14	16.3	5	102	115	95	M8x12	4	292.5	348	8/9
C 22 2/3	SK95B	130	19	21.8	6	102	115	95	M8x12	4	292.5	348	8/9
C 22 2/3	SK95C	130	24	27.3	8	102	115	95	M8x12	4	292.5	348	8/9
C 22 2/3	SK110A	150	19	21.8	6	120	130	110	M8x12	5	292.5	348	8/9
C 22 2/3	SK110B	150	24	27.3	8	120	130	110	M8x12	5	292.5	348	8/9

		Mt [Nm]	D	E	F	G	M	N	N1	N2	N4	X	P 2x	P 3x	Kg
C 22 2/3	SC60A*	M6	15	102	7	12.5	12.5	11	82	75	60	M5x10	4	271.5	327	7/8
C 22 2/3	SC60B*	M6	15	102	7	12.5	12.5	14	82	75	60	M5x10	4	271.5	327	8/9
C 22 2/3	SC80A*	M6	15	115	6	12.5	12.5	14	90	100	80	M6x12	4	271.5	327	8/9
C 22 2/3	SC80C	M6	15	120	15.5	14.5	17.75	19	96	100	80	M6x12	4	316	371.5	9/10
C 22 2/3	SC95A	M6	15	130	16.5	15	17.75	14	102	115	95	M8x16	4	316	371.5	9/10
C 22 2/3	SC95B	M6	15	130	16.5	15	17.75	19	102	115	95	M8x16	4	316	371.5	9/10
C 22 2/3	SC95C	M6	15	130	16.5	15	17.75	24	102	115	95	M8x16	4	316	371.5	9/10
C 22 2/3	SC110A	M6	15	150	16.5	16	17.75	19	120	130	110	M8x16	5	316	371.5	10/11
C 22 2/3	SC110B	M6	15	150	16.5	16	17.75	24	120	130	110	M8x16	5	316	371.5	10/11

* Nehmen Sie bitte Kontakt mit unserem technischen Service auf und geben die Anwendung an.

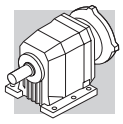

C 22...HS

P

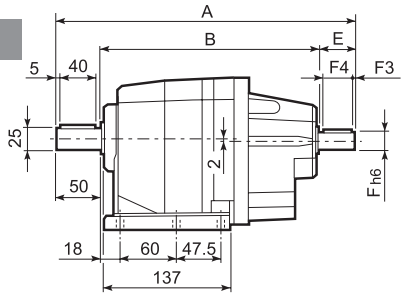

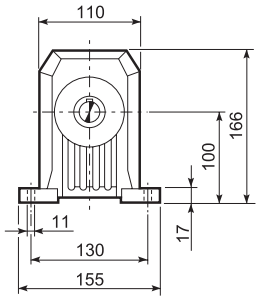

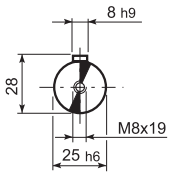

OUTPUT

F

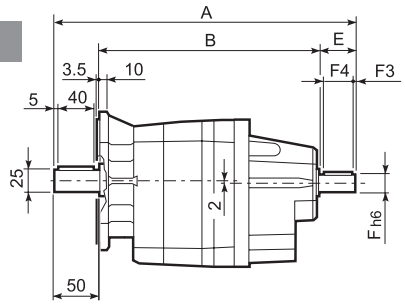

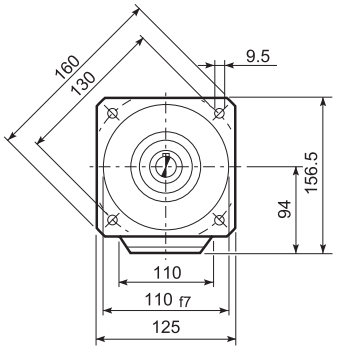

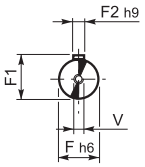

INPUT

U

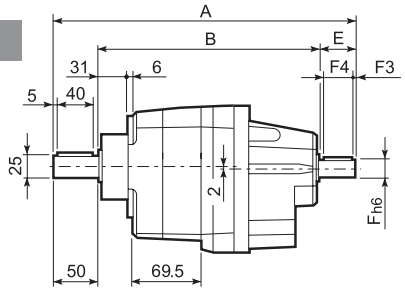

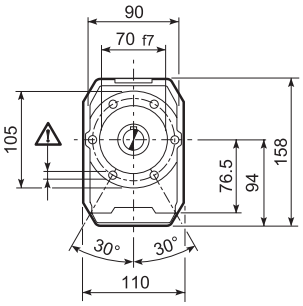

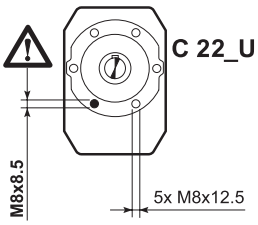

UF

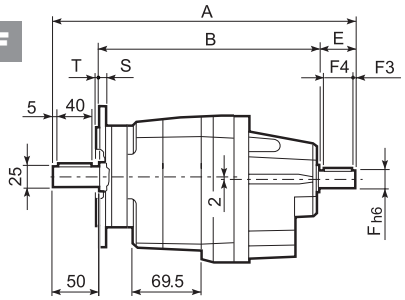

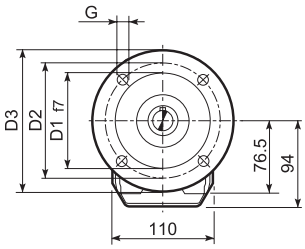

C 22_U						
	D1	D2	D3	G	T	S
FA	95	115	140	9	3	10
FB	110	130	160	9	3	10
FC	130	165	200	11	3.5	11

		A	B	E	F	F1	F2	F3	F4	V	Kg
C 22 2	HS	323	233	40	19	21.5	6	2.5	35	M6x16	7.2
C 22 3		335.5	245.5	40	16	18	6	2.5	36	M6x16	7.5

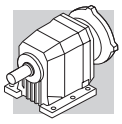

C 32...M/ME/MX

P

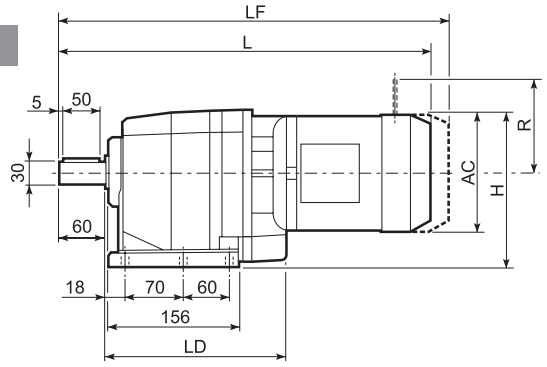

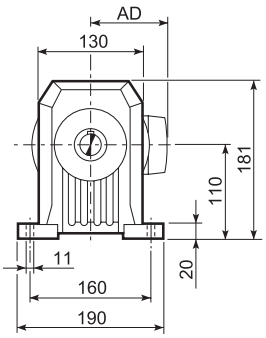

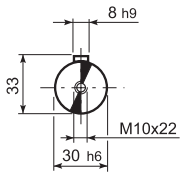

OUTPUT

F

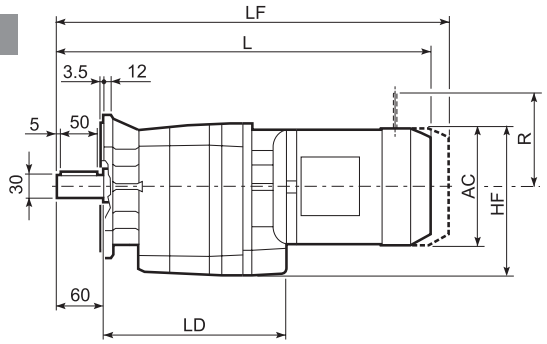

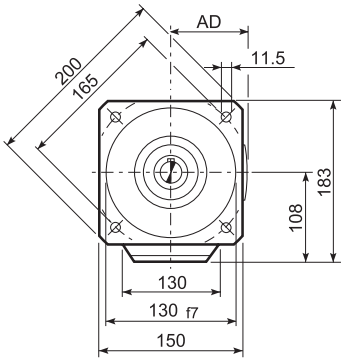

U

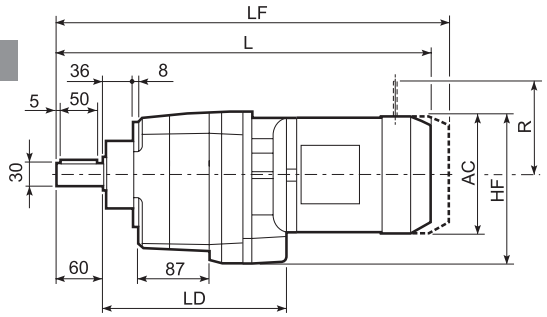

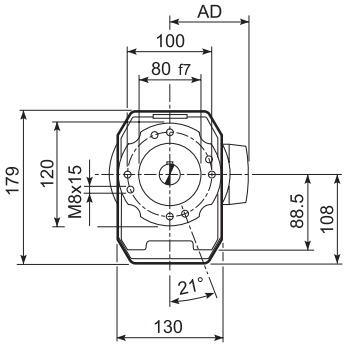

UF

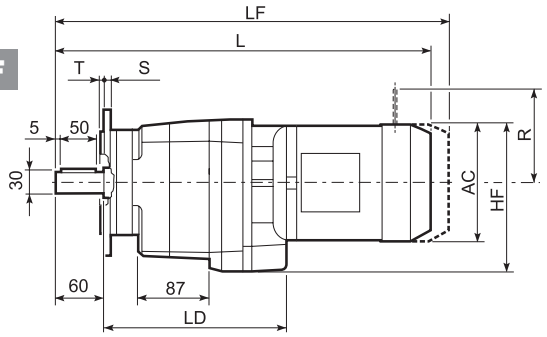

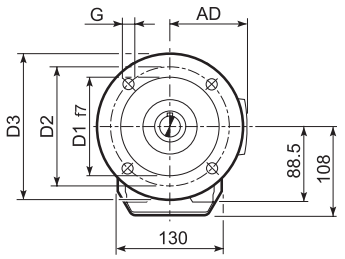

C 32_U					
	D1	D2	D3	G	T	S
FA	110	130	160	9	3	10
FB	130	165	200	11	3.5	11
FC	180	215	250	14	4	13

											M...FD M...FA		M...FD		M...FA	
				AC	H	HF	L	LD	AD	Kg	LF	Kg	R	AD	R	AD
C 32 2	S1	M1		138	179	177	462.5	205.5	108	14	523.5	16	103	135	124	108
C 32 2	S2	M2S		156	188	186	490.5	217.5	119	18	561.5	21	129	146	134	119
C 32 2	S2	ME2S		156	188	186	490.5	217.5	119	18	—	—	—	—	—	—
C 32 2	S3	ME3S		195	207.5	205.5	534.5	227.5	142	24.5	—	—	—	—	—	—
C 32 2	S3	ME3L		195	207.5	205.5	566.5	227.5	142	32	—	—	—	—	—	—
C 32 2	S4	ME4	MX4	258	239	237	674.5	—	193	66	—	—	—	—	—	—
C 32 2	S4	ME4LB	MX4LA	258	239	237	709.5	—	193	74	—	—	—	—	—	—
C 32 3	S05	M05		121	170.5	168.5	491	—	95	13	557	15	96	122	116	95
C 32 3	S1	M1		138	179	177	520	—	108	15	581	17	103	135	124	108
C 32 3	S2	ME2S		156	188	186	548	—	119	18	—	—	—	—	—	—
C 32 3	S3	ME3S		195	207.5	205.5	592	—	142	25.5	—	—	—	—	—	—
C 32 3	S3	ME3L		195	207.5	205.5	624	—	142	33	—	—	—	—	—	—

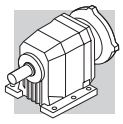

C 32...P(IEC)

P

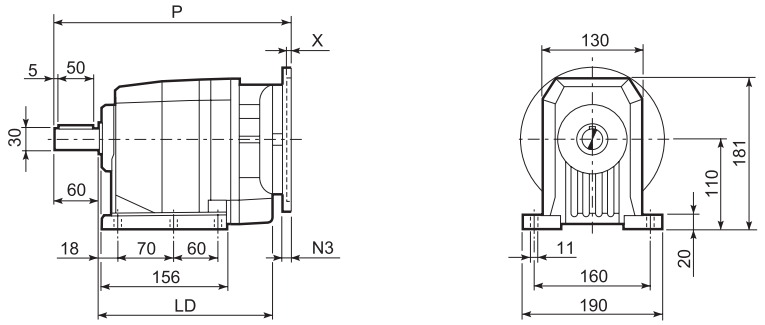

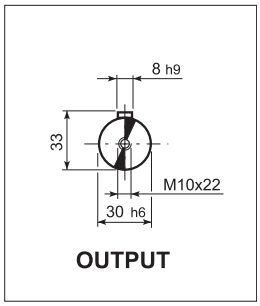

F

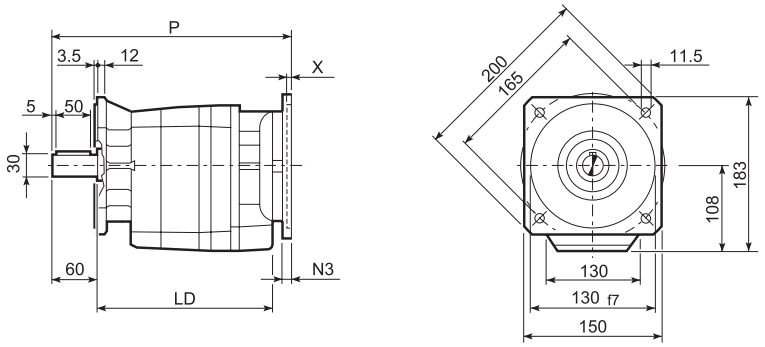

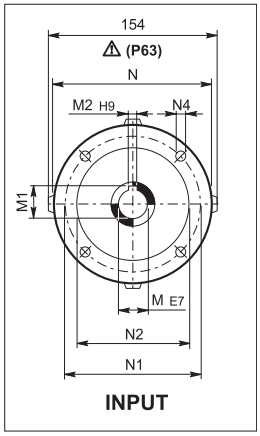

U

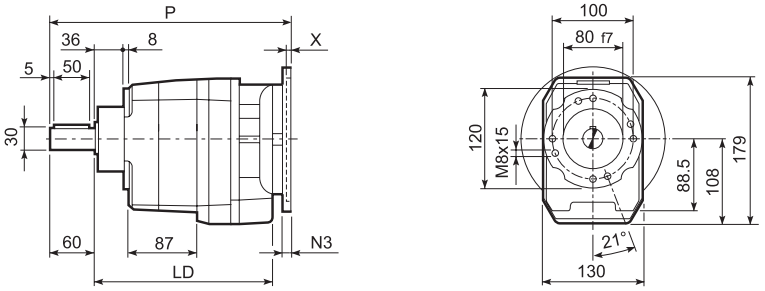

UF

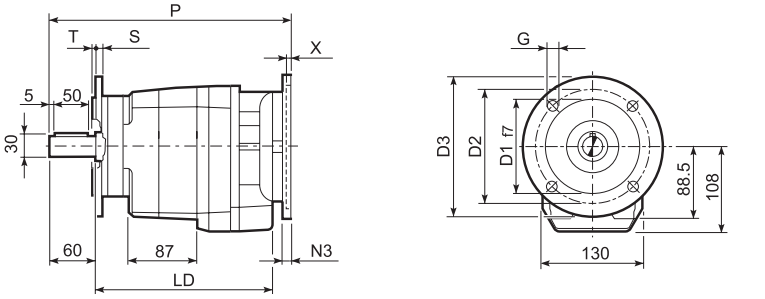

C 32_U						
	D1	D2	D3	G	T	S
FA	110	130	160	9	3	10
FB	130	165	200	11	3.5	11
FC	180	215	250	14	4	13

		LD	M	M1	M2	N	N1	N2	N3	N4	X	P	Kg
C 32 2	P63	217.5	11	12.8	4	140	115	95	—	M8x19	4	307.5	9
C 32 2	P71	217.5	14	16.3	5	160	130	110	—	M8x16	4.5	307.5	9
C 32 2	P80	227.5	19	21.8	6	200	165	130	—	M10x12	4	327	10
C 32 2	P90	227.5	24	27.3	8	200	165	130	—	M10x12	4	327	10
C 32 2	P100	227.5	28	31.3	8	250	215	180	—	M12x16	4.5	337	14
C 32 2	P112	227.5	28	31.3	8	250	215	180	—	M12x16	4.5	337	14
C 32 2	P132	—	38	41.3	10	300	265	230	16	14	5	373	17
C 32 3	P63	—	11	12.8	4	140	115	95	—	M8x19	4	365	10
C 32 3	P71	—	14	16.3	5	160	130	110	—	M8x16	4.5	365	10
C 32 3	P80	—	19	21.8	6	200	165	130	—	M10x12	4	384.5	11
C 32 3	P90	—	24	27.3	8	200	165	130	—	M10x12	4	384.5	11
C 32 3	P100	—	28	31.3	8	250	215	180	—	M12x16	4.5	394.5	15
C 32 3	P112	—	28	31.3	8	250	215	180	—	M12x16	4.5	394.5	15

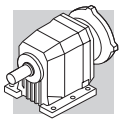

C 32...SK / SC

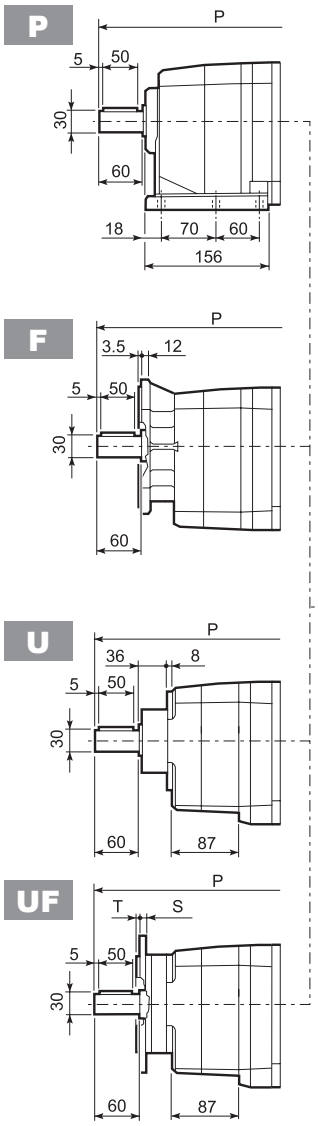

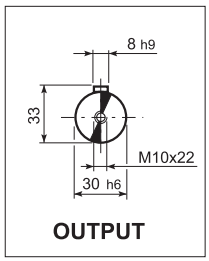

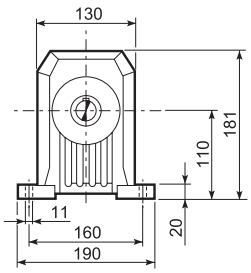

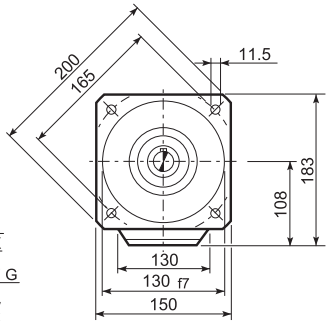

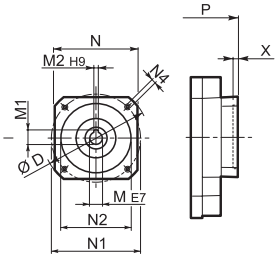

SK...

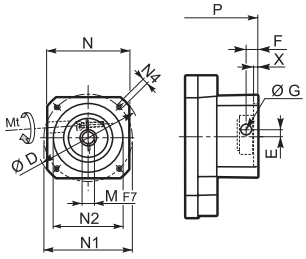

SC...

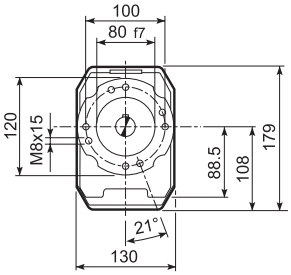

C 32_U						
	D1	D2	D3	G	T	S
FA	110	130	160	9	3	10
FB	130	165	200	11	3.5	11
FC	180	215	250	14	4	13

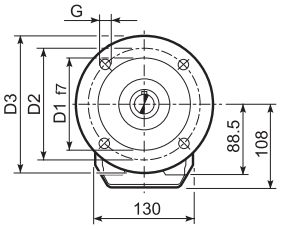

		D	M	M1	M2	N	N1	N2	N4	X	P 2x	P 3x	Kg
C 32 2/3	SK60A	102	11	12.8	4	82	75	60	M5x10	3.5	279	336.5	8/9
C 32 2/3	SK60B	102	14	16.3	5	82	75	60	M5x10	4	286	343.5	9/10
C 32 2/3	SK80A	115	14	16.3	5	90	100	80	M6x12	4	286	343.5	9/10
C 32 2/3	SK80C	120	19	21.8	6	96	100	80	M6x12	4	327	384.5	10/11
C 32 2/3	SK95A	130	14	16.3	5	102	115	95	M8x12	4	327	384.5	10/11
C 32 2/3	SK95B	130	19	21.8	6	102	115	95	M8x12	4	327	384.5	10/11
C 32 2/3	SK95C	130	24	27.3	8	102	115	95	M8x12	4	327	384.5	10/11
C 32 2/3	SK110A	150	19	21.8	6	120	130	110	M8x12	5	327	384.5	10/11
C 32 2/3	SK110B	150	24	27.3	8	120	130	110	M8x12	5	327	384.5	10/11
C 32 2	SK130A	188	24	27.3	8	142	165	130	M10x20	5	327	—	11

			Mt [Nm]	D	E	F	G	M	N	N1	N2	N4	X	P 2x	P 3x	Kg
C 32 2/3	SC60A	M6	15	102	7	12.5	12.5	11	82	75	60	M5x10	4	306	363.5	9/10
C 32 2/3	SC60B	M6	15	102	7	12.5	12.5	14	82	75	60	M5x10	4	306	363.5	10/11
C 32 2/3	SC80A	M6	15	115	6	12.5	12.5	14	90	100	80	M6x12	4	306	363.5	10/11
C 32 2/3	SC80C	M6	15	120	15.5	14.5	17.75	19	96	100	80	M6x12	4	350.5	408	11/12
C 32 2/3	SC95A	M6	15	130	16.5	15	17.75	14	102	115	95	M8x16	4	350.5	408	11/12
C 32 2/3	SC95B	M6	15	130	16.5	15	17.75	19	102	115	95	M8x16	4	350.5	408	11/12
C 32 2/3	SC95C	M6	15	130	16.5	15	17.75	24	102	115	95	M8x16	4	350.5	408	11/12
C 32 2/3	SC 110A	M6	15	150	16.5	16	17.75	19	120	130	110	M8x16	5	350.5	408	12/13
C 32 2/3	SC 110B	M6	15	150	16.5	16	17.75	24	120	130	110	M8x16	5	350.5	408	12/13
C 32 2	SC 130A	M6	15	188	19	16	17.75	24	142	165	130	M10x20	5	350.5	—	13

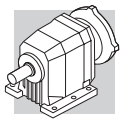

C 32...HS

P

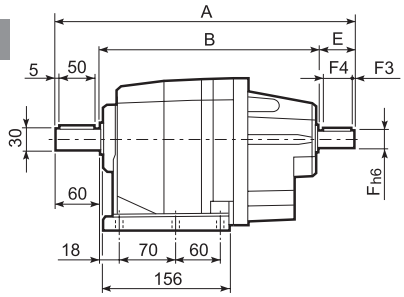

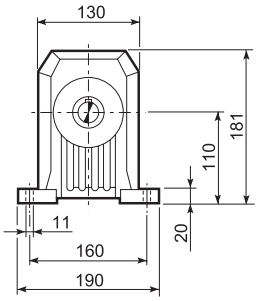

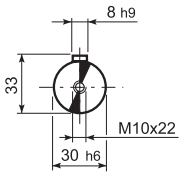

OUTPUT

F

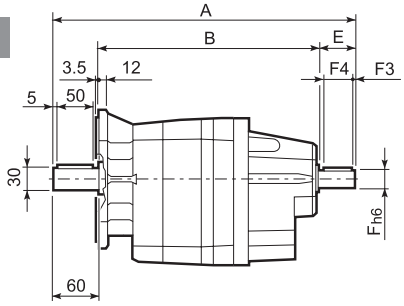

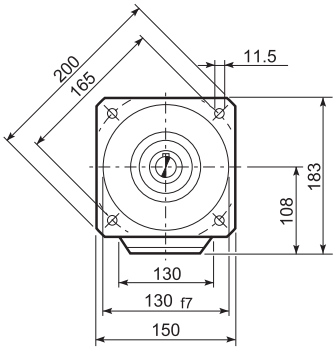

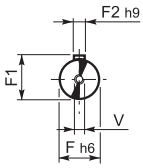

INPUT

U

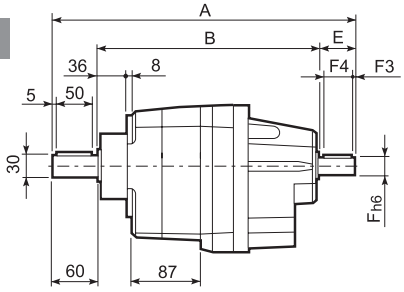

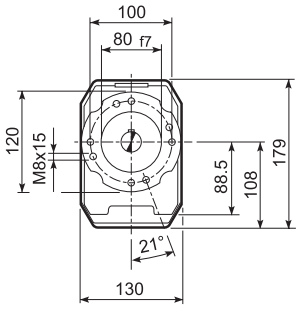

UF

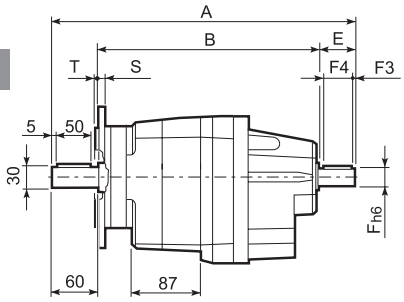

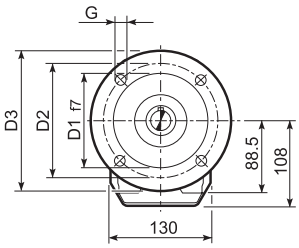

C 32_U						
	D1	D2	D3	G	T	S
FA	110	130	160	9	3	10
FB	130	165	200	11	3.5	11
FC	180	215	250	14	4	13

		A	B	E	F	F1	F2	F3	F4	V	Kg
C 32 2	HS	357.5	257.5	40	19	21.5	6	2.5	35	M6x16	11.1
C 32 3		372	272	40	16	18	5	2.5	35	M6x16	10.6

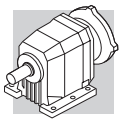

C 36...M/ME/MX

P

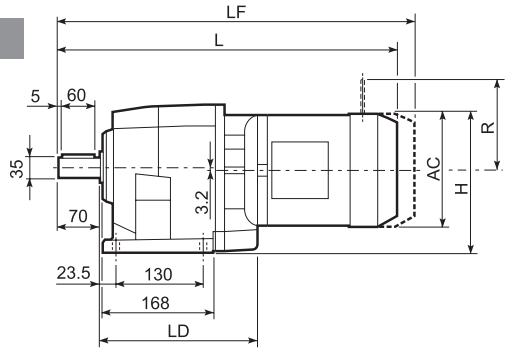

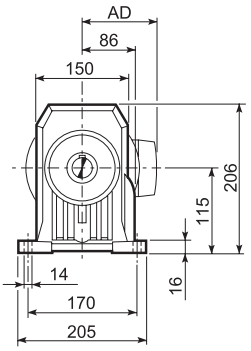

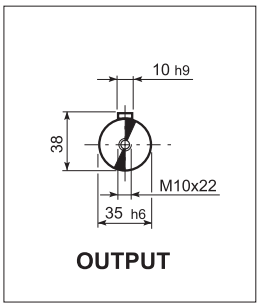

U

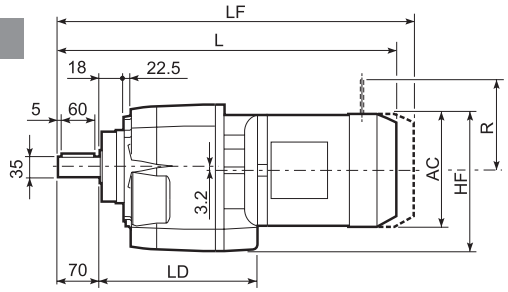

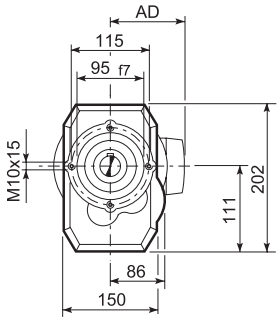

UF

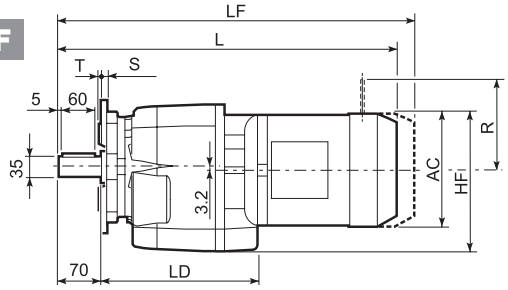

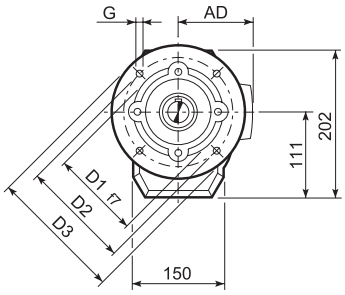

C 36_U						
	D1	D2	D3	G	T	S
FA	130	165	200	11	3.5	11
FB	180	215	250	14	4	14

											M...FD M...FA		M...FD		M...FA	
				AC	H	HF	L	LD	AD	Kg	LF	Kg	R	AD	R	AD
C 36 2/3	S1	M1		138	184	177	481	214	108	20	542	21	103	135	124	108
C 36 2/3	S2	ME2S		156	193	186	509	226	119	23	—	—	—	—	—	—
C 36 2/3	S3	ME3S		195	212.5	205.5	553	236	142	29.5	—	—	—	—	—	—
C 36 2/3	S3	ME3L		195	212.5	205.5	585	236	142	37	—	—	—	—	—	—
C 36 2/3	S4	ME4	MX4	258	244	240	693.5	—	193	71	—	—	—	—	—	—
C 36 2/3	S4	ME4LB	MX4LA	258	244	240	728.5	—	193	79	—	—	—	—	—	—
C 36 4	S05	M05		121	175.5	168.5	509.5	—	95	19	575.5	20	96	122	116	95
C 36 4	S1	M1		138	184	177	538.5	—	108	21	599.5	22	103	135	124	108
C 36 4	S2	ME2S		156	193	186	566.5	—	119	24	—	—	—	—	—	—
C 36 4	S3	ME3S		195	212.5	205.5	610.5	—	142	30.5	—	—	—	—	—	—
C 36 4	S3	ME3L		195	212.5	205.5	642.5	—	142	38	—	—	—	—	—	—

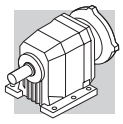

C 36...P(IEC)

P

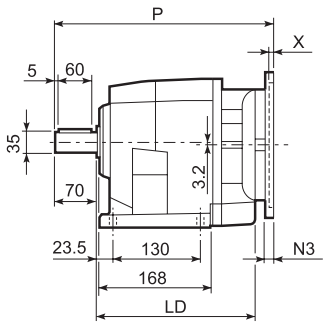

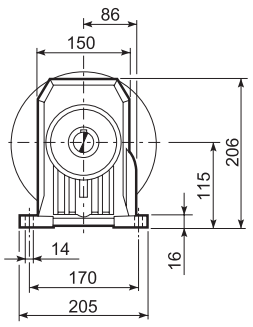

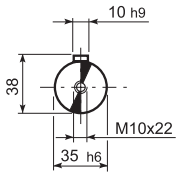

OUTPUT

U

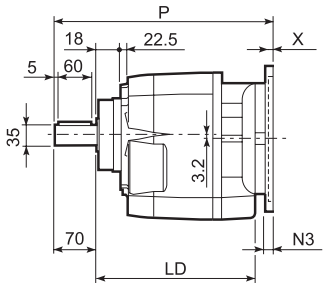

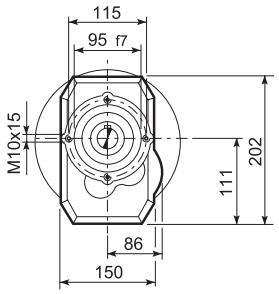

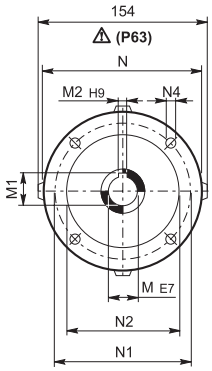

INPUT

UF

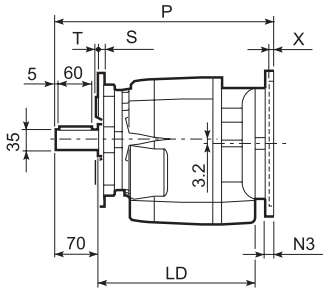

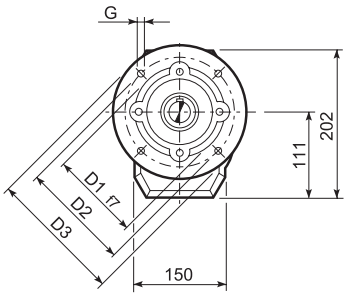

C 36_U						
	D1	D2	D3	G	T	S
FA	130	165	200	11	3.5	11
FB	180	215	250	14	4	14

		LD	M	M1	M2	N	N1	N2	N3	N4	X	P	Kg
C 36 2/3	P63	226	11	12.8	4	140	115	95	—	M8x19	4	326	17
C 36 2/3	P71	226	14	16.3	5	160	130	110	—	M8x16	4.5	326	17
C 36 2/3	P80	236	19	21.8	6	200	165	130	—	M10x12	4	345.5	18
C 36 2/3	P90	236	24	27.3	8	200	165	130	—	M10x12	4	345.5	18
C 36 2/3	P100	236	28	31.3	8	250	215	180	—	M12x16	4.5	355.5	22
C 36 2/3	P112	236	28	31.3	8	250	215	180	—	M12x16	4.5	355.5	22
C 36 2/3	P132	—	38	41.3	10	300	265	230	16	14	5	392.5	25
C 36 4	P63	—	11	12.8	4	140	115	95	—	M8x19	4	383.5	20
C 36 4	P71	—	14	16.3	5	160	130	110	—	M8x16	4.5	383.5	20
C 36 4	P80	—	19	21.8	6	200	165	130	—	M10x12	4	403	21
C 36 4	P90	—	24	27.3	8	200	165	130	—	M10x12	4	403	21
C 36 4	P100	—	28	31.3	8	250	215	180	—	M12x16	4.5	413	25
C 36 4	P112	—	28	31.3	8	250	215	180	—	M12x16	4.5	413	25

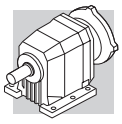

C 36...SK / SC

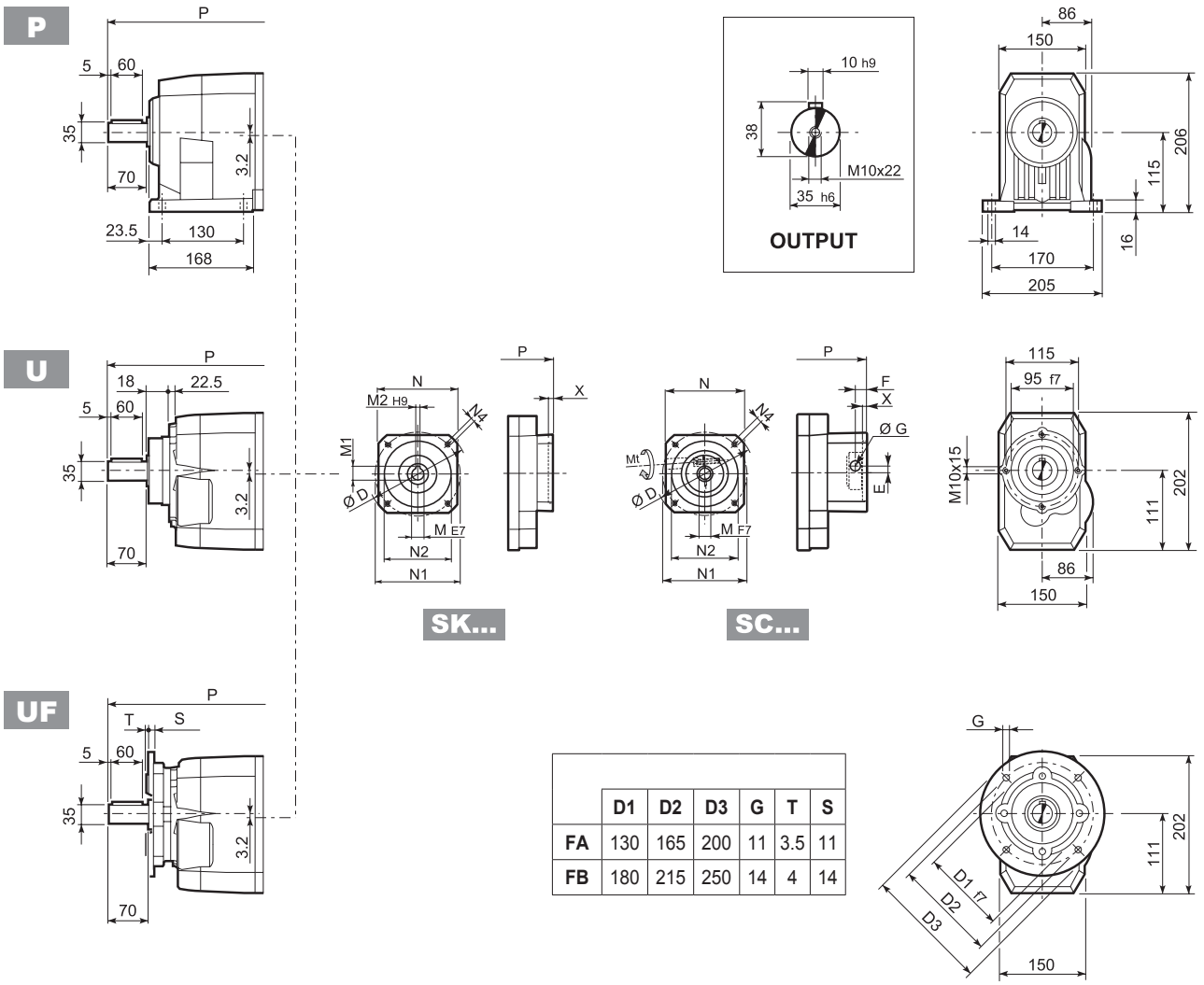

	D1	D2	D3	G	T	S
FA	130	165	200	11	3.5	11
FB	180	215	250	14	4	14

		D	M	M1	M2	N	N1	N2	N4	X	P 2/3x	P 4x	Kg
C 36 2/3/4	**SK60A**	102	11	12.8	4	82	75	60	M5x10	3.5	297.5	355	16/16/19
C 36 2/3/4	**SK60B**	102	14	16.3	5	82	75	60	M5x10	4	304.5	362	17/17/20
C 36 2/3/4	**SK80A**	115	14	16.3	5	90	100	80	M6x12	4	304.5	362	18/18/21
C 36 2/3/4	**SK80C**	120	19	21.8	6	96	100	80	M6x12	4	304.5	403	18/18/21
C 36 2/3/4	**SK95A**	130	14	16.3	5	102	115	95	M8x12	4	345.5	403	18/18/21
C 36 2/3/4	**SK95B**	130	19	21.8	6	102	115	95	M8x12	4	345.5	403	18/18/21
C 36 2/3/4	**SK95C**	130	24	27.3	8	102	115	95	M8x12	4	345.5	403	18/18/21
C 36 2/3/4	**SK110A**	150	19	21.8	6	120	130	110	M8x12	5	345.5	403	18/18/21
C 36 2/3/4	**SK110B**	150	24	27.3	8	120	130	110	M8x12	5	345.5	403	18/18/21
C 36 2/3	**SK130A**	188	24	27.3	8	142	165	130	M10x20	5	345.5	—	19/19

			Mt [Nm]	D	E	F	G	M	N	N1	N2	N4	X	P 2/3x	P 4x	Kg
C 36 2/3/4	**SC60A**	M6	15	102	7	12.5	12.5	11	82	75	60	M5x10	4	324.5	382	17/17/20
C 36 2/3/4	**SC60B**	M6	15	102	7	12.5	12.5	14	82	75	60	M5x10	4	324.5	382	18/18/21
C 36 2/3/4	**SC80A**	M6	15	115	6	12.5	12.5	14	90	100	80	M6x12	4	324.5	426.5	18/18/21
C 36 2/3/4	**SC80C**	M6	15	120	15.5	14.5	17.75	19	96	100	80	M6x12	4	369	426.5	19/19/22
C 36 2/3/4	**SC95A**	M6	15	130	16.5	15	17.75	14	102	115	95	M8x16	4	369	426.5	19/19/22
C 36 2/3/4	**SC95B**	M6	15	130	16.5	15	17.75	19	102	115	95	M8x16	4	369	426.5	19/19/22
C 36 2/3/4	**SC95C**	M6	15	130	16.5	15	17.75	24	102	115	95	M8x16	4	369	426.5	19/19/22
C 36 2/3/4	**SC110A**	M6	15	150	16.5	16	17.75	19	120	130	110	M8x16	5	369	426.5	21/21/24
C 36 2/3/4	**SC110B**	M6	15	150	16.5	16	17.75	24	120	130	110	M8x16	5	369	426.5	21/21/24
C 36 2/3	**SC130A**	M6	15	188	19	16	17.75	24	142	165	130	M10x20	5	369	—	22/22

C 36...HS

P

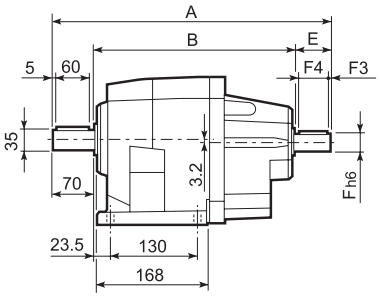

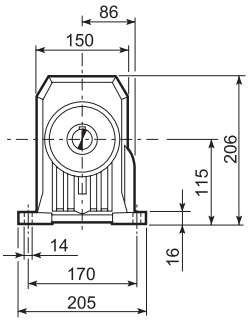

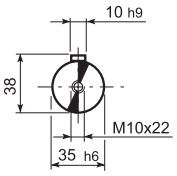

OUTPUT

U

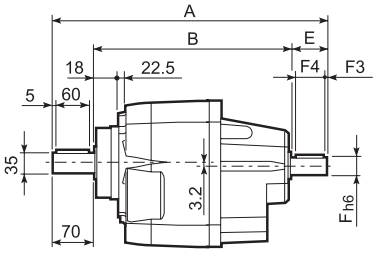

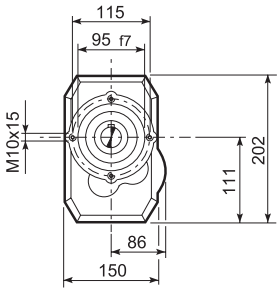

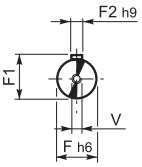

INPUT

UF

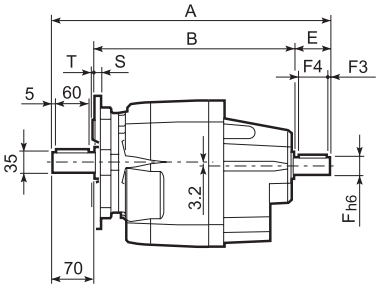

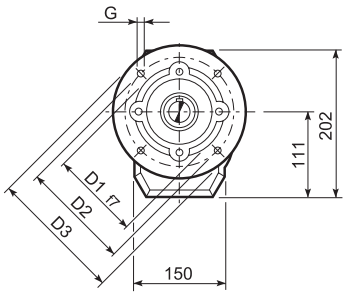

C 36_U						
	D1	D2	D3	G	T	S
FA	130	165	200	11	3.5	11
FB	180	215	250	14	4	14

		A	B	E	F	F1	F2	F3	F4	V	Kg
C 36 2	HS	415.5	295.5	50	24	27	8	2.5	45	M8x19	25.5
C 36 3		415.5	295.5	50	24	27	8	2.5	45	M8x19	25.5
C 36 4		390.5	280.5	40	16	18	5	2.5	36	M6x16	26.5

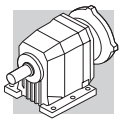

C 41...M/ME/MX

P

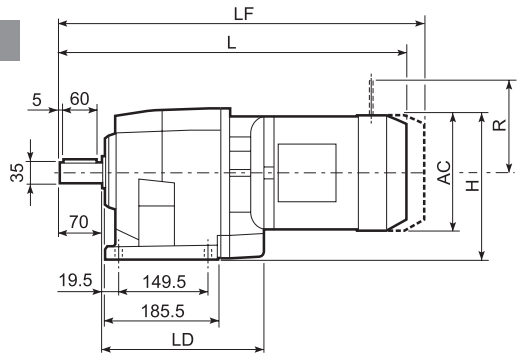

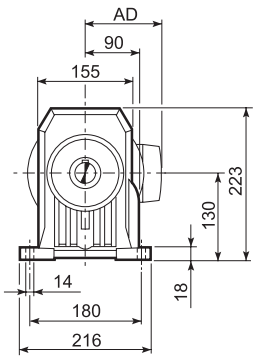

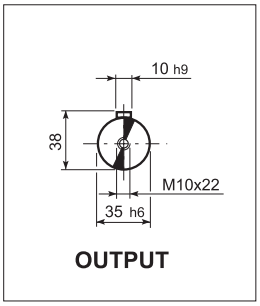

U

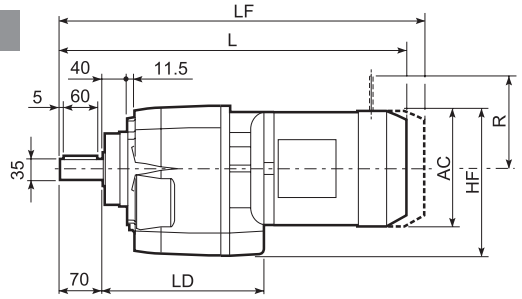

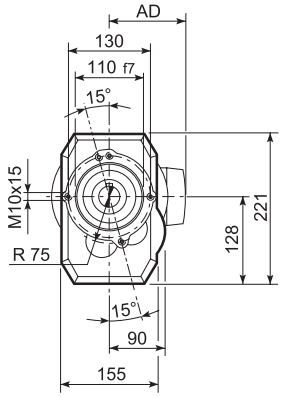

UF

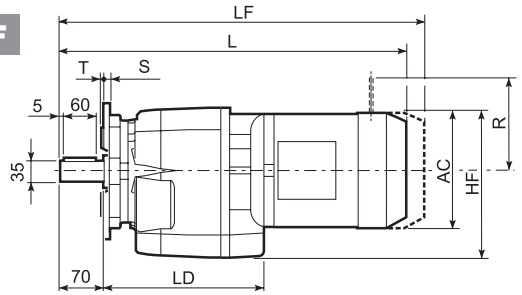

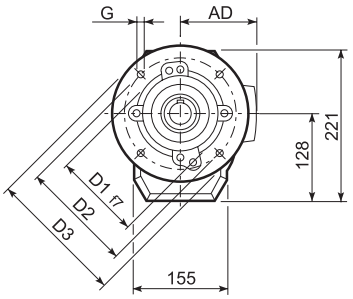

C 41_U	D1	D2	D3	G	T	S
FA	130	165	200	11	3.5	11
FB	180	215	250	14	4	13

											M...FD M...FA		M...FD		M...FA	
				AC	H	HF	L	LD	AD	Kg	LF	Kg	R	AD	R	AD
C 41 2/3	**S1**	**M1**		138	199	197	491.5	220	108	25	552.5	28	103	135	124	108
C 41 2/3	**S2**	**ME2S**		156	208	206	519.5	235.5	119	31	—	—	—	—	—	—
C 41 2/3	**S3**	**ME3S**		195	227.5	225.5	563.5	251.5	142	37.5	—	—	—	—	—	—
C 41 2/3	**S3**	**ME3L**		195	227.5	225.5	595.5	251.5	142	45	—	—	—	—	—	—
C 41 2/3	**S4**	**ME4**	**MX4**	258	259	257	703.5	—	193	71	—	—	—	—	—	—
C 41 2/3	**S4**	**ME4LB**	**MX4LA**	258	259	257	739	—	193	78	—	—	—	—	—	—
C 41 4	**S05**	**M05**		231	245.5	243.5	524	—	95	27	590	28	96	122	116	95
C 41 4	**S1**	**M1**		138	199	197	553	—	108	28	614	31	103	135	124	108
C 41 4	**S2**	**ME2S**		156	208	206	581	—	119	34	—	—	—	—	—	—
C 41 4	**S3**	**ME3S**		195	227.5	225.5	625	—	142	40.5	—	—	—	—	—	—
C 41 4	**S3**	**ME3L**		195	227.5	225.5	657	—	142	48	—	—	—	—	—	—

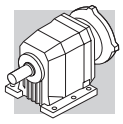

C 41...P(IEC)

P

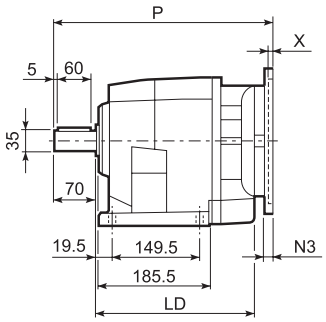

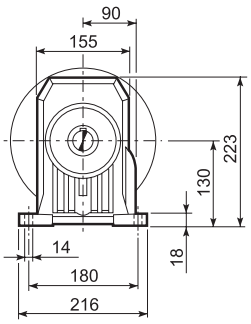

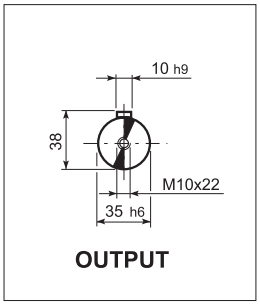

U

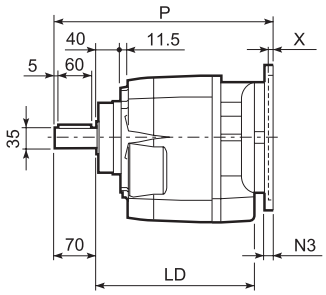

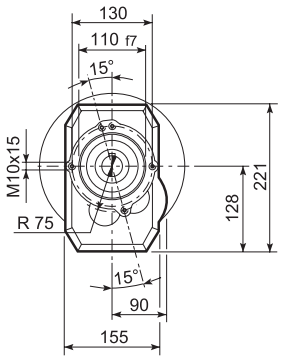

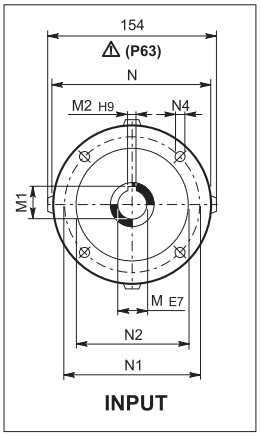

UF

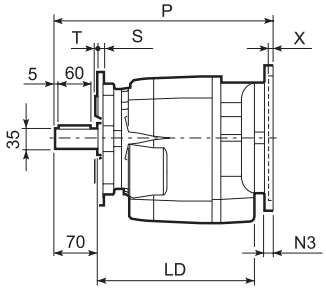

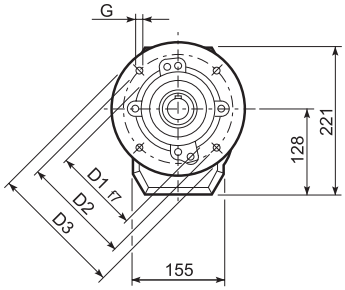

C 41_U						
	D1	D2	D3	G	T	S
FA	130	165	200	11	3.5	11
FB	180	215	250	14	4	13

		LD	M	M1	M2	N	N1	N2	N3	N4	X	P	Kg
C 41 2/3	P63	235.5	11	12.8	4	140	115	95	—	M8x19	4	336.5	27
C 41 2/3	P71	235.5	14	16.3	5	160	130	110	—	M8x16	4.5	336.5	28
C 41 2/3	P80	251.5	19	21.8	6	200	165	130	—	M10x12	4	356	29
C 41 2/3	P90	251.5	24	27.3	8	200	165	130	—	M10x12	4	356	29
C 41 2/3	P100	—	28	31.3	8	250	215	180	—	M12x16	4.5	366	33
C 41 2/3	P112	—	28	31.3	8	250	215	180	—	M12x16	4.5	366	33
C 41 2/3	P132	—	38	41.3	10	300	265	230	16	14	5	402.5	35
C 41 4	P63	—	11	12.8	4	140	115	95	—	M8x19	4	395	30
C 41 4	P71	—	14	16.3	5	160	130	110	—	M8x16	4.5	395	31
C 41 4	P80	—	19	21.8	6	200	165	130	—	M10x12	4	414.5	32
C 41 4	P90	—	24	27.3	8	200	165	130	—	M10x12	4	414.5	32
C 41 4	P100	—	28	31.3	8	250	215	180	—	M12x16	4.5	424.5	36
C 41 4	P112	—	28	31.3	8	250	215	180	—	M12x16	4.5	424.5	36

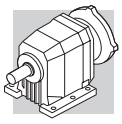

C 41...SK / SC

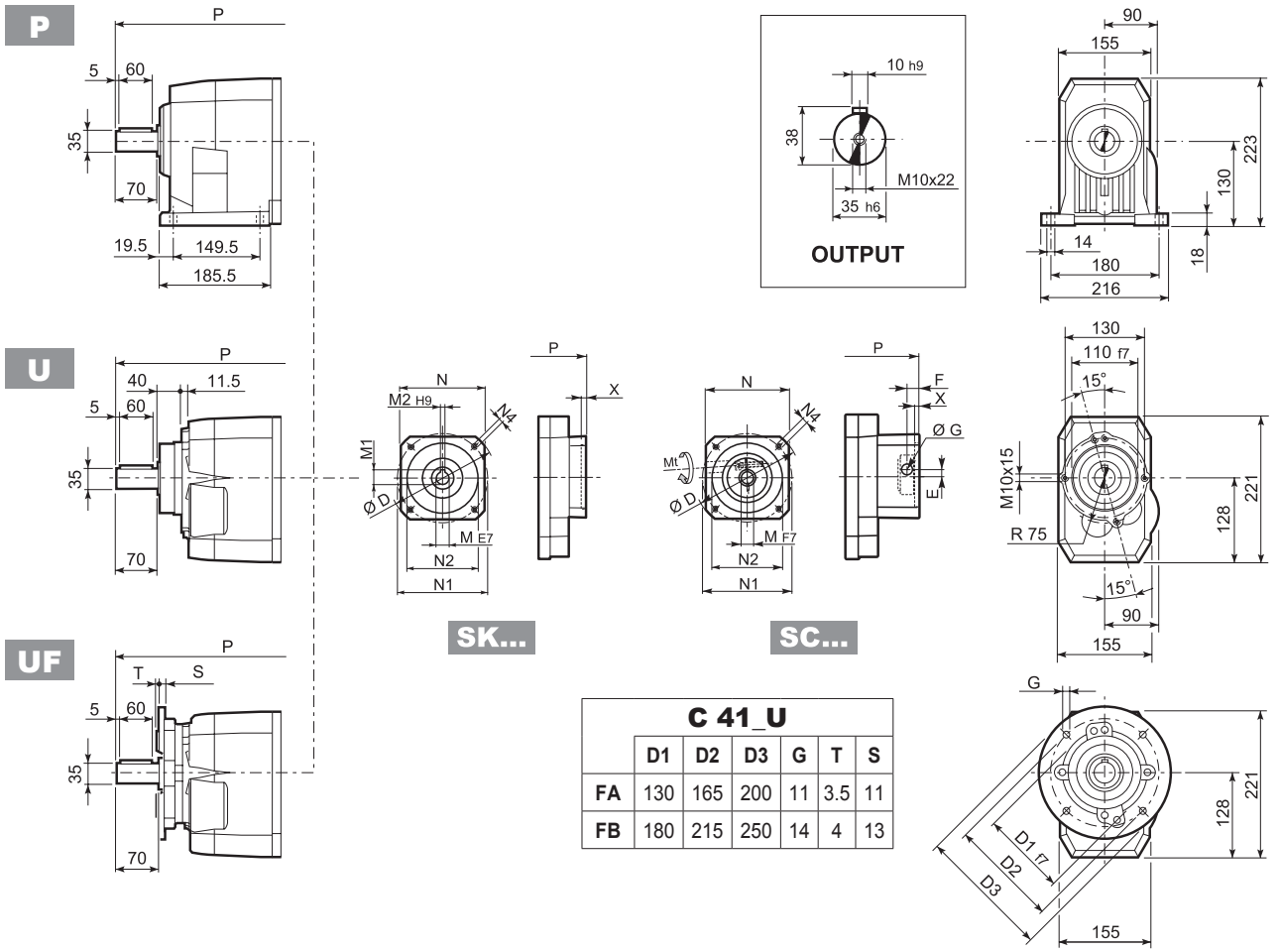

C 41_U						
	D1	D2	D3	G	T	S
FA	130	165	200	11	3.5	11
FB	180	215	250	14	4	13

		D	M	M1	M2	N	N1	N2	N4	X	P 2/3x	P 4x	Kg
C41 4	SK60A	102	11	12.8	4	82	75	60	M5x10	3.5	—	370	31
C41 4	SK60B	102	14	16.3	5	82	75	60	M5x10	4	—	377	32
C41 4	SK80A	115	14	16.3	5	90	100	80	M6x12	4	—	377	32
C41 2/3	SK80B	120	14	16.3	5	96	100	80	M6x12	4	356.5	—	29/29
C41 2/3/4	SK80C	120	19	21.8	6	96	100	80	M6x12	4	356.5	418	29/29/32
C41 2/3/4	SK95A	130	14	16.3	5	102	115	95	M8x12	4	356.5	418	29/29/32
C41 2/3/4	SK95B	130	19	21.8	6	102	115	95	M8x12	4	356.5	418	29/29/33
C41 2/3/4	SK95C	130	24	27.3	8	102	115	95	M8x12	4	356.5	418	29/29/36
C41 2/3/4	SK110A	150	19	21.8	6	120	130	110	M8x12	5	356.5	418	29/29/36
C41 2/3/4	SK110B	150	24	27.3	8	120	130	110	M8x12	5	356.5	418	29/29/36
C41 2/3	SK130A	188	24	27.3	8	142	165	130	M10x20	5	356.5	—	31/31
C41 2/3	SK130B	189	32	35.3	10	160	165	130	M10x20	5	403	—	33/33
C41 2/3	SK180A	240	32	35.3	10	192	215	180	M12x19	5	403	—	33/33
C41 2/3	SK180B	240	38	41.3	10	192	215	180	M12x19	5	403	—	38/38

			Mt [Nm]	D	E	F	G	M	N	N1	N2	N4	X	P 2/3x	P 4x	Kg
C41 4	SC60A	M6	15	102	7	12.5	12.5	11	82	75	60	M5x10	4	—	397	32
C41 4	SC60B	M6	15	102	7	12.5	12.5	14	82	75	60	M5x10	4	—	397	33
C41 4	SC80A	M6	15	115	6	12.5	12.5	14	90	100	80	M6x12	4	—	397	33
C41 2/3	SC80B	M6	15	120	15.5	14.5	17.75	14	96	100	80	M6x12	4	380	—	30/30
C41 2/3/4	SC80C	M6	15	120	15.5	14.5	17.75	19	96	100	80	M6x12	4	380	441.5	30/30/33
C41 2/3/4	SC95A	M6	15	130	16.5	15	17.75	14	102	115	95	M8x16	4	380	441.5	30/30/34
C41 2/3/4	SC95B	M6	15	130	16.5	15	17.75	19	102	115	95	M8x16	4	380	441.5	30/30/34
C41 2/3/4	SC95C	M6	15	130	16.5	15	17.75	24	102	115	95	M8x16	4	380	441.5	30/30/35
C41 2/3/4	SC110A	M6	15	150	16.5	16	17.75	19	120	130	110	M8x16	5	380	441.5	31/31/39
C41 2/3/4	SC110B	M6	15	150	16.5	16	17.75	24	120	130	110	M8x16	5	380	441.5	31/31/39
C41 2/3	SC130A	M6	15	188	19	16	17.75	24	142	165	130	M10x20	5	380	—	32/32
C41 2/3	SC130B	M8	36	189	20	17	17.75	32	160	165	130	M10x20	5	426	—	36/36
C41 2/3	SC180A	M8	36	240	20	17.5	17.75	32	192	215	180	M12x24	5	430	—	36/36
C41 2/3	SC180B	M8	36	240	20	17.5	17.75	38	192	215	180	M12x24	5	430	—	35/35

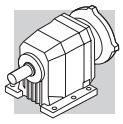

C 41...HS

P

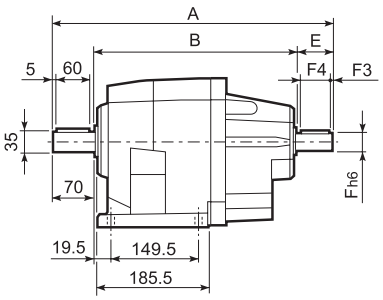

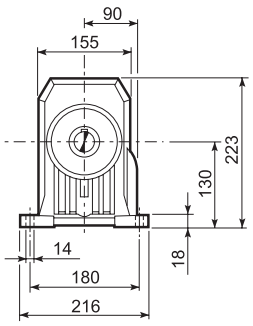

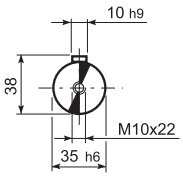

OUTPUT

U

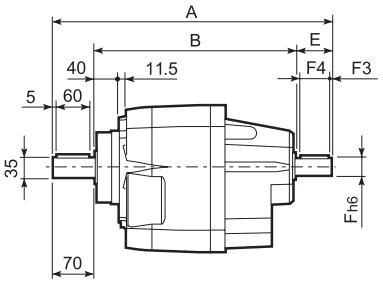

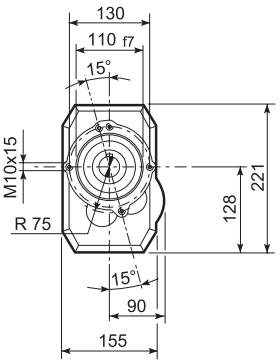

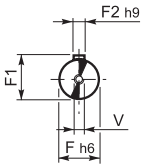

INPUT

UF

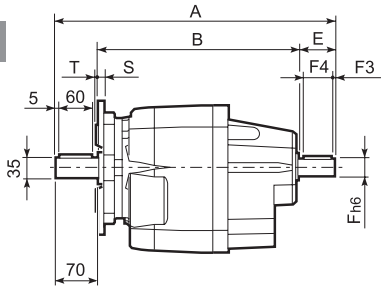

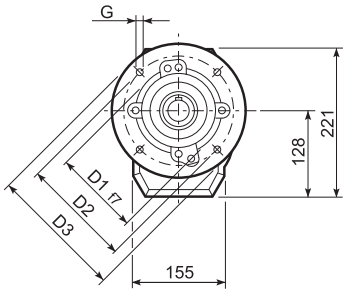

C 41_U						
	D1	D2	D3	G	T	S
FA	130	165	200	11	3.5	11
FB	180	215	250	14	4	13

		A	B	E	F	F1	F2	F3	F4	V	Kg
C 41 2	HS	425.5	305.5	50	24	27	8	2.5	45	M8x19	30
C 41 3		425.5	305.5	50	24	27	8	2.5	45	M8x19	30
C 41 4		448	338	40	19	21.5	6	2.5	35	M6x16	33

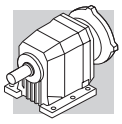

C 51...M/ME/MX

P

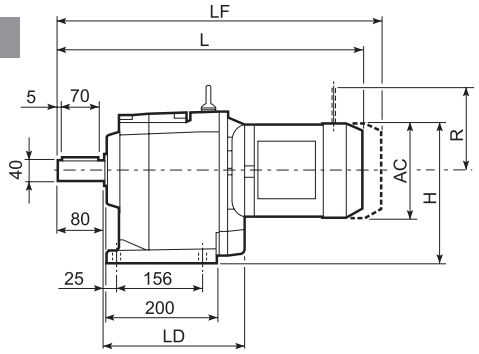

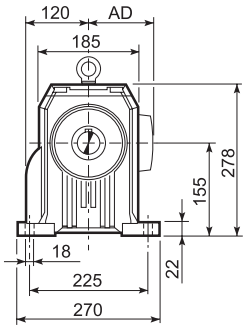

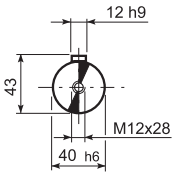

OUTPUT

U

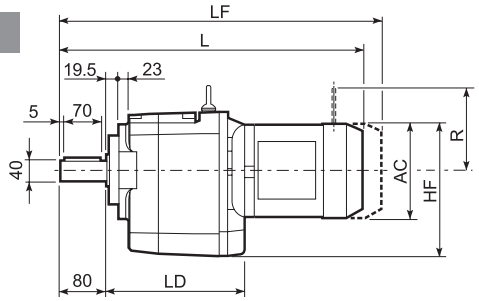

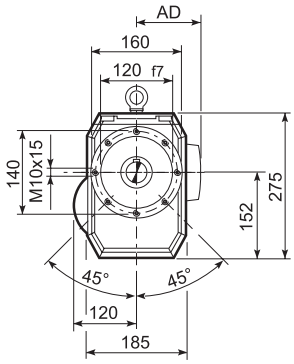

UF

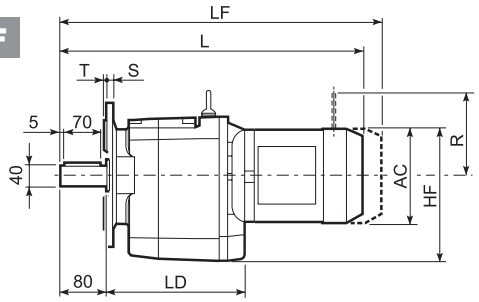

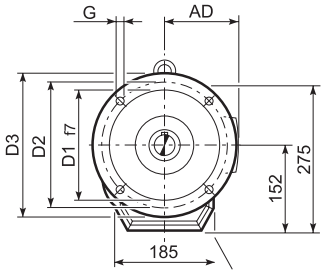

C 51_U						
	D1	D2	D3	G	T	S
FA	180	215	250	14	4	13
FB	230	265	300	14	4	16

											M...FD M...FA		M...FD		M...FA	
				AC	H	HF	L	LD	AD	Kg	LF	Kg	R	AD	R	AD
C 51 2/3	S1	M1		138	224	221	517.5	—	108	49	578.5	52	103	135	124	108
C 51 2/3	S2	ME2S		156	233	230	545.5	252.5	119	53	—	—	—	—	—	—
C 51 2/3	S3	ME3S		195	252.5	249.5	589.5	267.5	142	59.5	—	—	—	—	—	—
C 51 2/3	S3	ME3L		195	252.5	249.5	621.5	267.5	142	65	—	—	—	—	—	—
C 51 2/3	S4	ME4	MX4	258	284	281	729.5	—	193	99	—	—	—	—	—	—
C 51 2/3	S4	ME4LB	MX4LA	258	284	281	764.5	—	193	107	—	—	—	—	—	—
C 51 2/3	S5	ME5S	MX5S	310	310	307	816	—	245	127	—	—	—	—	—	—
C 51 2/3	S5	ME5L	MX5L	310	310	307	860	—	245	143	—	—	—	—	—	—
C 51 4	S1	M1		138	224	221	589	—	108	52	650	55	103	135	124	108
C 51 4	S2	ME2S		156	233	230	617	—	119	56	—	—	—	—	—	—
C 51 4	S3	ME3S		195	252.5	249.5	661	—	142	62.5	—	—	—	—	—	—
C 51 4	S3	ME3L		195	252.5	249.5	693	—	142	68	—	—	—	—	—	—
C 51 4	S4	ME4	MX4	258	284	281	801	—	193	98	—	—	—	—	—	—
C 51 4	S4	ME4LB	MX4LA	258	284	281	836	—	193	112	—	—	—	—	—	—

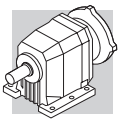

C 51...P(IEC)

P

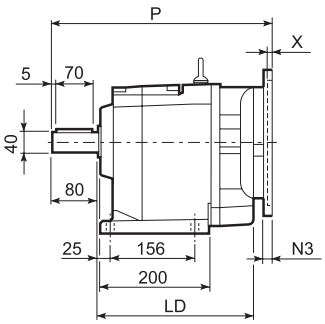

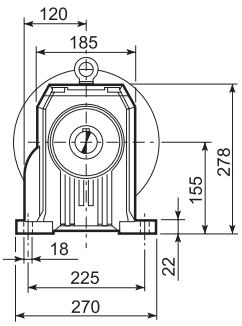

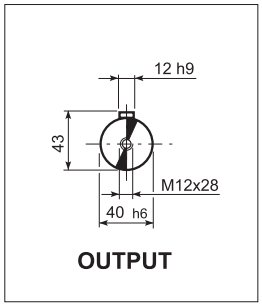

U

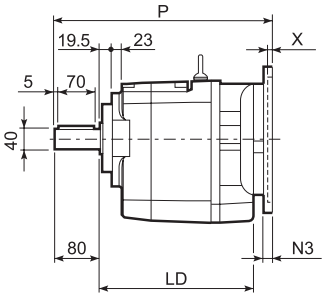

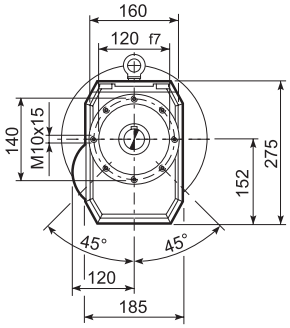

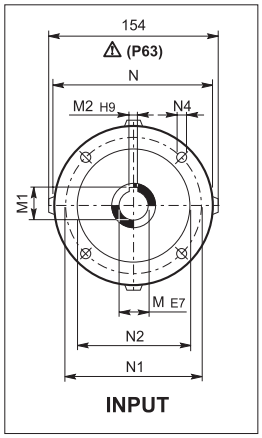

UF

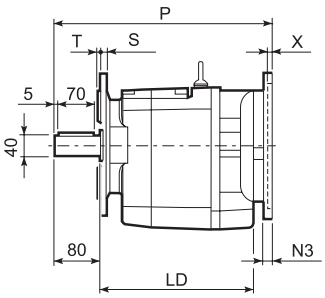

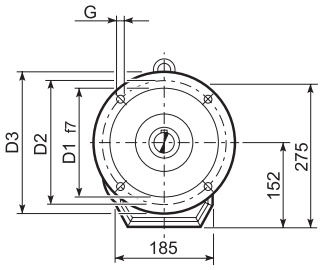

C 51_U						
	D1	D2	D3	G	T	S
FA	180	215	250	14	4	13
FB	230	265	300	14	4	16

		LD	M	M1	M2	N	N1	N2	N3	N4	X	P	Kg
C 51 2/3	P63	252.5	11	12.8	4	140	115	95	—	M8x19	4	362.5	45
C 51 2/3	P71	252.5	14	16.3	5	160	130	110	—	M8x16	4.5	362.5	45
C 51 2/3	P80	267.5	19	21.8	6	200	165	130	—	M10x12	4	382	47
C 51 2/3	P90	267.5	24	27.3	8	200	165	130	—	M10x12	4	382	47
C 51 2/3	P100	252.5	28	31.3	8	250	215	180	—	M12x16	4.5	392	51
C 51 2/3	P112	252.5	28	31.3	8	250	215	180	—	M12x16	4.5	392	51
C 51 2/3	P132	252.5	38	41.3	10	300	265	230	16	14	5	428.5	54
C 51 2/3	P160	—	42	45.3	12	350	300	250	23	18	5.5	479	58
C 51 2/3	P180	—	48	51.8	14	350	300	250	23	18	5.5	479	58
C 51 4	P63	—	11	12.8	4	140	115	95	—	M8x19	4	434	47
C 51 4	P71	—	14	16.3	5	160	130	110	—	M8x16	4.5	434	47
C 51 4	P80	—	19	21.8	6	200	165	130	—	M10x12	4	453.5	49
C 51 4	P90	—	24	27.3	8	200	165	130	—	M10x12	4	463.5	49
C 51 4	P100	—	28	31.3	8	250	215	180	—	M12x16	4.5	463.5	53
C 51 4	P112	—	28	31.3	8	250	215	180	—	M12x16	4.5	463.5	53
C 51 4	P132	—	38	41.3	10	300	265	230	16	14	5	500	62

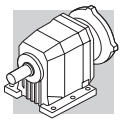

C 51...SK / SC

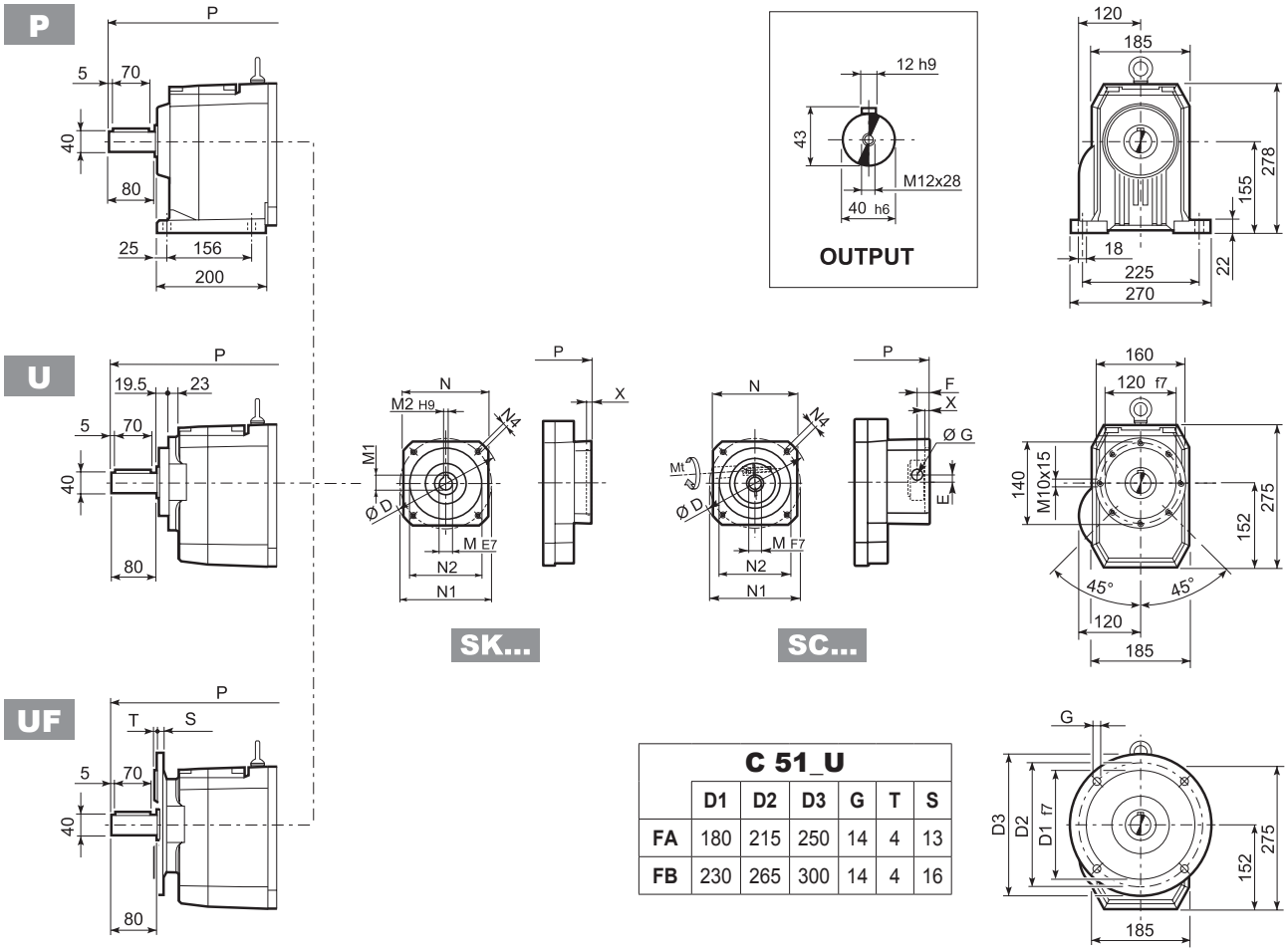

C 51_U						
	D1	D2	D3	G	T	S
FA	180	215	250	14	4	13
FB	230	265	300	14	4	16

		D	M	M1	M2	N	N1	N2	N4	X	P 2/3x	P 4x	Kg
C 51 2/3	SK80B	120	14	16.3	5	96	100	80	M6x12	4	382	—	46/46
C 51 2/3/4	SK80C	120	19	21.8	6	96	100	80	M6x12	4	382	453.5	47/47/49
C 51 2/3/4	SK95A	130	14	16.3	5	102	115	95	M8x12	4	382	453.5	46/46/48
C 51 2/3/4	SK95B	130	19	21.8	6	102	115	95	M8x12	4	382	453.5	47/47/49
C 51 2/3/4	SK95C	130	24	27.3	8	102	115	95	M8x12	4	382	453.5	47/47/49
C 51 2/3/4	SK110A	150	19	21.8	6	120	130	110	M8x12	5	382	453.5	47/47/51
C 51 2/3/4	SK110B	150	24	27.3	8	120	130	110	M8x12	5	382	453.5	47/47/51
C 51 2/3/4	SK130A	188	24	27.3	8	142	165	130	M10x20	5	382	453.5	49/49/52
C 51 2/3	SK130B	189	32	35.3	10	160	165	130	M10x20	5	428.5	—	55/55
C 51 2/3	SK180A	240	32	35.3	10	192	215	180	M12x19	5	428.5	—	55/55
C 51 2/3	SK180B	240	38	41.3	10	192	215	180	M12x19	5	428.5	—	55/55

			Mt [Nm]	D	E	F	G	M	N	N1	N2	N4	X	P 2/3x	P 4x	Kg
C 51 2/3	SC80B	M6	15	120	15.5	14.5	17.75	14	96	100	80	M6x12	4	405.5	—	47/47
C 51 2/3/4	SC80C	M6	15	120	15.5	14.5	17.75	19	96	100	80	M6x12	4	405.5	477	48/48/50
C 51 2/3/4	SC95A	M6	15	130	16.5	15	17.75	14	102	115	95	M8x16	4	405.5	477	47/47/49
C 51 2/3/4	SC95B	M6	15	130	16.5	15	17.75	19	102	115	95	M8x16	4	405.5	477	48/48/50
C 51 2/3/4	SC95C	M6	15	130	16.5	15	17.75	24	102	115	95	M8x16	4	405.5	477	48/48/50
C 51 2/3/4	SC110A	M6	15	150	16.5	16	17.75	19	120	130	110	M8x16	5	405.5	477	49/49/52
C 51 2/3/4	SC110B	M6	15	150	16.5	16	17.75	24	120	130	110	M8x16	5	405.5	477	49/49/52
C 51 2/3/4	SC130A	M6	15	188	19	16	17.75	24	142	165	130	M10x20	5	405.5	477	50/50/53
C 51 2/3	SC130B	M8	36	189	20	17	17.75	32	160	165	130	M10x20	5	451.5	—	54/54
C 51 2/3	SC180A	M8	36	240	20	17.5	17.75	32	192	215	180	M12x24	5	455.5	—	54/54
C 51 2/3	SC180B	M8	36	240	20	17.5	17.75	38	192	215	180	M12x24	5	455.5	—	54/54

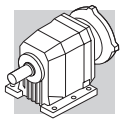

C 51...HS

P

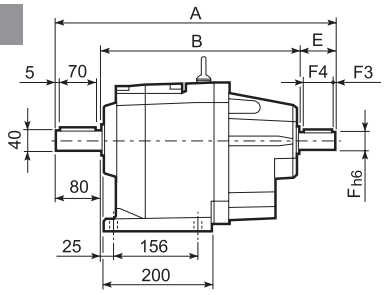

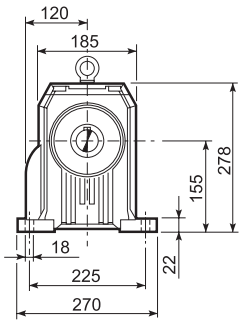

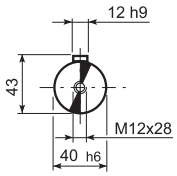

OUTPUT

U

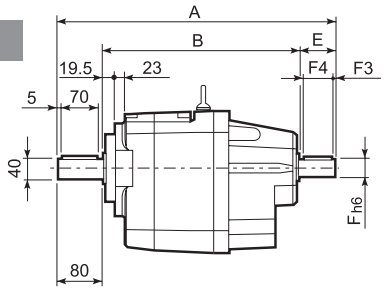

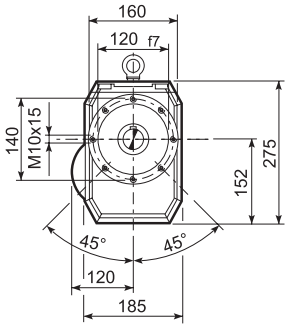

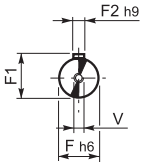

INPUT

UF

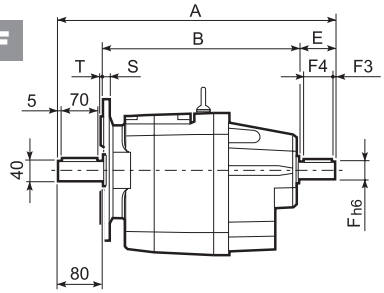

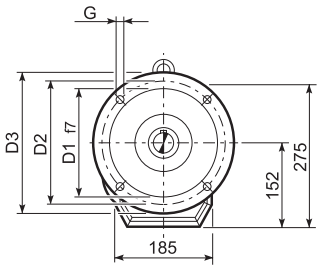

C 51_U						
	D1	D2	D3	G	T	S
FA	180	215	250	14	4	13
FB	230	265	300	14	4	16

		A	B	E	F	F1	F2	F3	F4	V	Kg
C 51 2	HS	451.5	322	50	24	24	8	2.5	45	M8x19	45
C 51 3		451.5	322	50	24	24	8	2.5	45	M8x19	45
C 51 4		484	364	40	19	21.5	6	2.5	35	M6x16	48

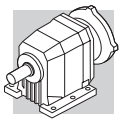

C 61...M/ME/MX

P

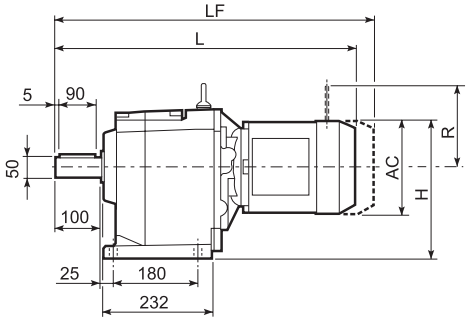

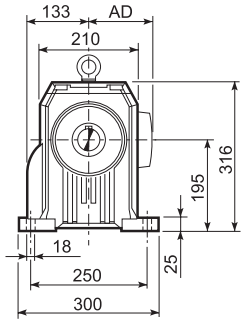

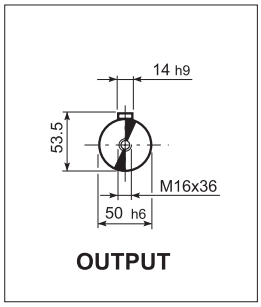

U

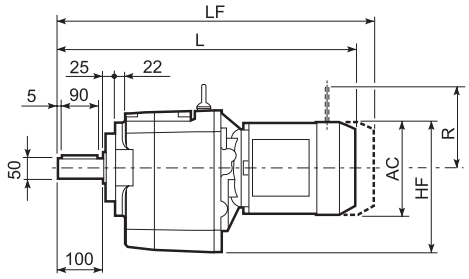

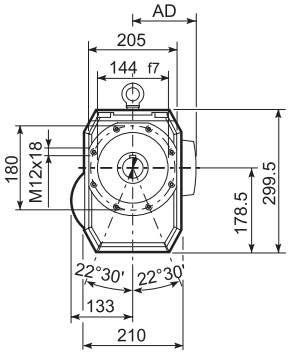

UF

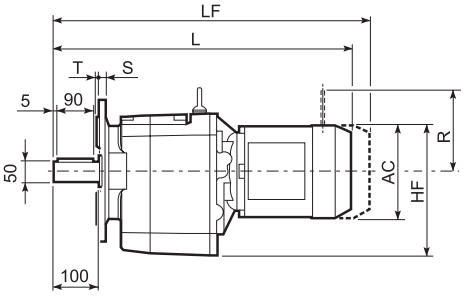

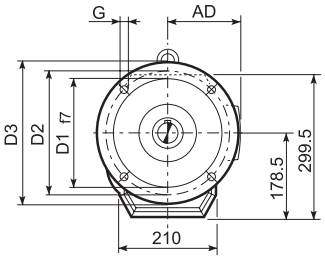

C 61_U						
	D1	D2	D3	G	T	S
FA	230	265	300	14	4	16
FB	250	300	350	18	5	18

										M...FD M...FA		M...FD		M...FA	
				AC	H	HF	L	AD	Kg	LF	Kg	R	AD	R	AD
C 61 2/3	S2	ME2S		156	273	256.5	598.5	119	61	—	—	—	—	—	—
C 61 2/3	S3	ME3S		195	292.5	276	642.5	142	67.5	—	—	—	—	—	—
C 61 2/3	S3	ME3L		195	292.5	276	674.5	142	74	—	—	—	—	—	—
C 61 2/3	S4	ME4	MX4	258	324	307.5	782.5	193	108	—	—	—	—	—	—
C 61 2/3	S4	ME4LB	MX4LA	258	324	307.5	817.5	193	116	—	—	—	—	—	—
C 61 2/3	S5	ME5S	MX5S	310	350	333.5	869	245	136	—	—	—	—	—	—
C 61 2/3	S5	ME5L	MX5L	310	350	333.5	913	245	152	—	—	—	—	—	—
C 61 4	S1	M1		138	264	247.5	641	108	71	702	74	103	135	124	108
C 61 4	S2	ME2S		156	273	256.5	669	119	75	—	—	—	—	—	—
C 61 4	S3	ME3S		195	292.5	276	713	142	80.5	—	—	—	—	—	—
C 61 4	S3	ME3L		195	292.5	276	745	142	87	—	—	—	—	—	—

C 61...P(IEC)

P

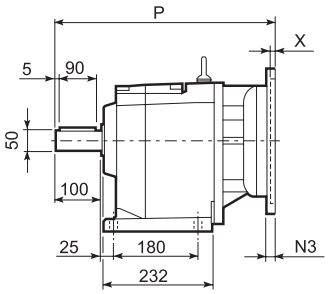

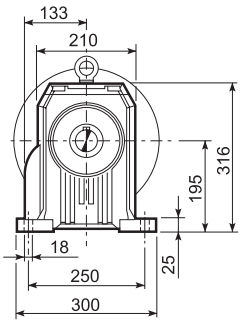

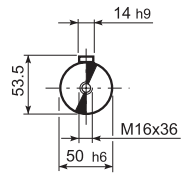

OUTPUT

U

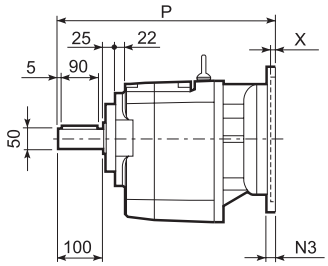

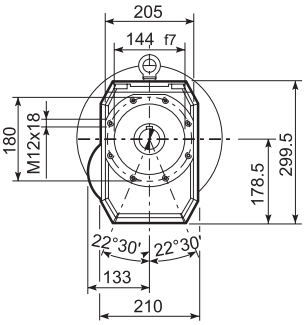

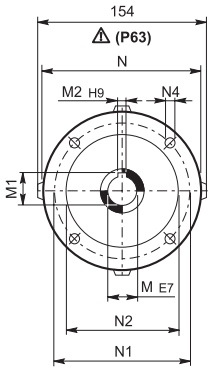

INPUT

UF

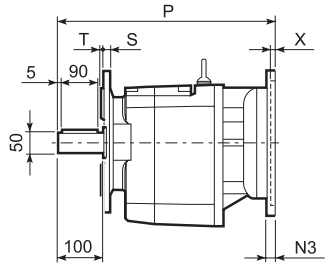

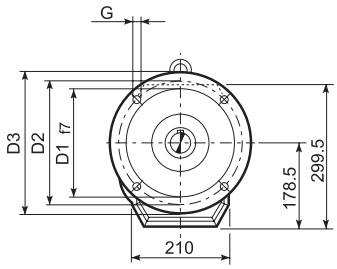

C 61_U						
	D1	D2	D3	G	T	S
FA	230	265	300	14	4	16
FB	250	300	350	18	5	18

		M	M1	M2	N	N1	N2	N3	N4	X	P	Kg
C 61 2/3	**P63**	11	12.8	4	140	115	95	—	M8x19	4	415.5	55
C 61 2/3	**P71**	14	16.3	5	160	130	110	—	M8x16	4.5	415.5	57
C 61 2/3	**P80**	19	21.8	6	200	165	130	—	M10x12	4	435	61
C 61 2/3	**P90**	24	27.3	8	200	165	130	—	M10x12	4	435	61
C 61 2/3	**P100**	28	31.3	8	250	215	180	—	M12x16	4.5	444	65
C 61 2/3	**P112**	28	31.3	8	250	215	180	—	M12x16	4.5	444	65
C 61 2/3	**P132**	38	41.3	10	300	265	230	16	14	5	481.5	68
C 61 2/3	**P160**	42	45.3	12	350	300	250	23	18	5.5	532	73
C 61 2/3	**P180**	48	51.8	14	350	300	250	23	18	5.5	532	73
C 61 4	**P63**	11	12.8	4	140	115	95	—	M8x19	4	486	61
C 61 4	**P71**	14	16.3	5	160	130	110	—	M8x16	4.5	489	63
C 61 4	**P80**	19	21.8	6	200	165	130	—	M10x12	4	505.5	67
C 61 4	**P90**	24	27.3	8	200	165	130	—	M10x12	4	505.5	67
C 61 4	**P100**	28	31.3	8	250	215	180	—	M12x16	4.5	515.5	71
C 61 4	**P112**	28	31.3	8	250	215	180	—	M12x16	4.5	515.5	71

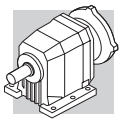

C 61...SK / SC

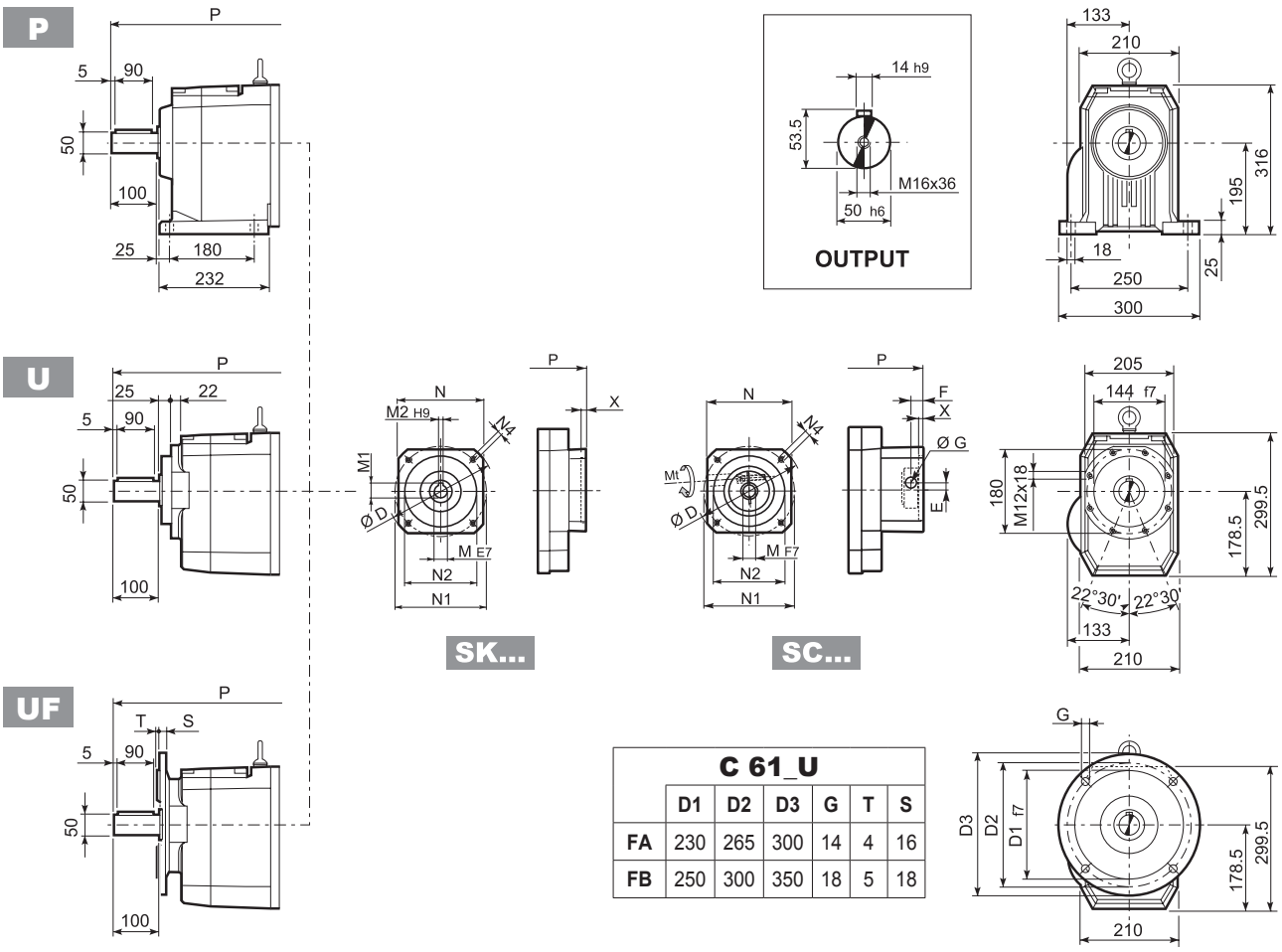

C 61_U	D1	D2	D3	G	T	S
FA	230	265	300	14	4	16
FB	250	300	350	18	5	18

		D	M	M1	M2	N	N1	N2	N4	X	P 2/3x	P 4x	Kg
C 61 4	SK80B	120	14	16.3	5	96	100	80	M6x12	4	—	505.5	62
C 61 2/3/4	SK80C	120	19	21.8	6	96	100	80	M6x12	4	435	505.5	63/63/69
C 61 2/3/4	SK95A	130	14	16.3	5	102	115	95	M8x12	4	435	505.5	60/60/67
C 61 2/3/4	SK95B	130	19	21.8	6	102	115	95	M8x12	4	435	505.5	63/63/69
C 61 2/3/4	SK95C	130	24	27.3	8	102	115	95	M8x12	4	435	505.5	63/63/69
C 61 2/3/4	SK110A	140	19	21.8	6	120	130	110	M8x12	5	435	505.5	63/63/69
C 61 2/3/4	SK110B	140	24	27.3	8	120	130	110	M8x12	5	435	505.5	63/63/69
C 61 2/3/4	SK130A	188	24	27.3	8	142	165	130	M10x20	5	435	505.5	67/67/80
C 61 2/3	SK130B	189	32	35.3	10	160	165	130	M10x20	5	481.5	—	72/72
C 61 2/3	SK180A	240	32	35.3	10	192	215	180	M12x19	5	481.5	—	72/72
C 61 2/3	SK180B	240	38	41.3	10	192	215	180	M12x19	5	481.5	—	66/66

			Mt [Nm]	D	E	F	G	M	N	N1	N2	N4	X	P 2/3x	P 4x	Kg
C 61 4	SC80B	M6	15	120	15.5	14.5	17.75	14	96	100	80	M6x12	4	—	529	63
C 61 2/3/4	SC80C	M6	15	120	15.5	14.5	17.75	19	96	100	80	M6x12	4	458.5	529	64/64/70
C 61 2/3/4	SC95A	M6	15	130	16.5	15	17.75	14	102	115	95	M8x16	4	458.5	529	61/61/68
C 61 2/3/4	SC95B	M6	15	130	16.5	15	17.75	19	102	115	95	M8x16	4	458.5	529	64/64/70
C 61 2/3/4	SC95C	M6	15	130	16.5	15	17.75	24	102	115	95	M8x16	4	458.5	529	64/64/70
C 61 2/3/4	SC110A	M6	15	140	16.5	16	17.75	19	120	130	110	M8x16	5	458.5	529	65/65/70
C 61 2/3/4	SC110B	M6	15	140	16.5	16	17.75	24	120	130	110	M8x16	5	458.5	529	65/65/70
C 61 2/3/4	SC130A	M6	15	188	19	16	17.75	24	142	165	130	M10x20	5	458.5	529	66/66/81
C 61 2/3	SC130B	M8	36	189	20	17	17.75	32	160	165	130	M10x20	5	504.5	—	75/75
C 61 2/3	SC180A	M8	36	240	20	17.5	17.75	32	192	215	180	M12x24	5	508.5	—	75/75
C 61 2/3	SC180B	M8	36	240	20	17.5	17.75	38	192	215	180	M12x24	5	508.5	—	69/69

C 61...HS

P

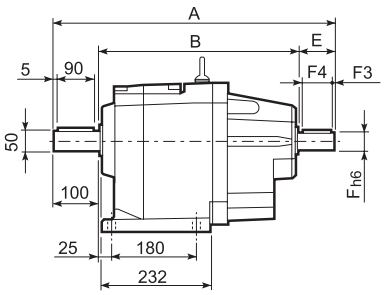

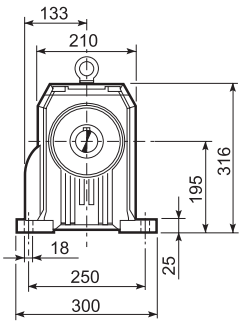

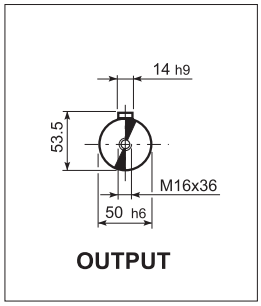

U

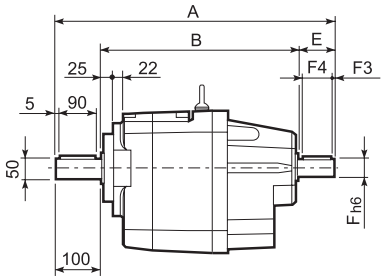

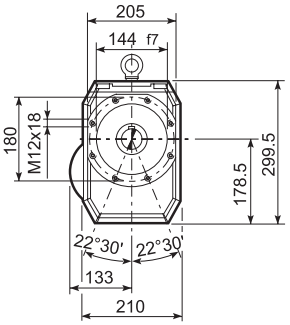

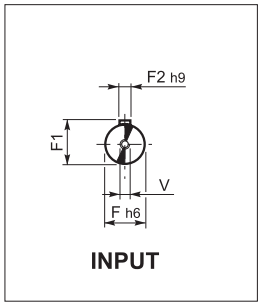

UF

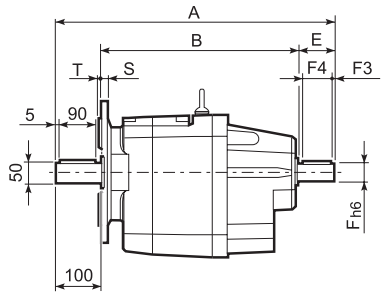

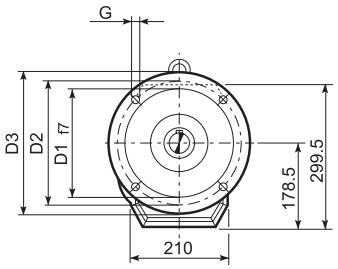

C 61_U						
	D1	D2	D3	G	T	S
FA	230	265	300	14	4	16
FB	250	300	350	18	5	18

		A	B	E	F	F1	F2	F3	F4	V	Kg
C 61 2	HS	532	372	60	28	31	8	5	50	M10x22	66
C 61 3		532	372	60	28	31	8	5	50	M10x22	66
C 61 4		575	425	50	24	27	8	2.5	45	M8x19	72

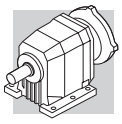

C 70...M/ME/MX

P

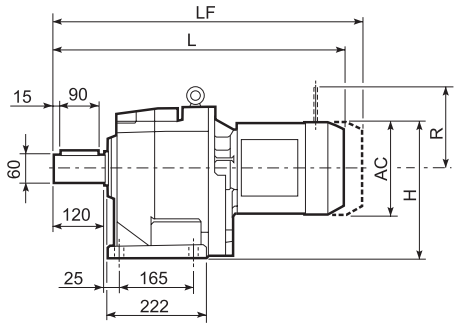

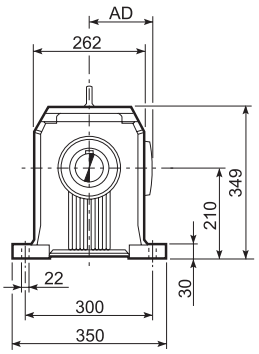

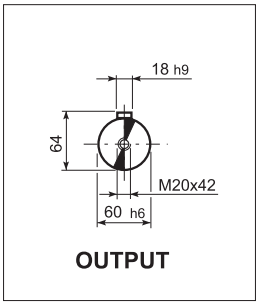

F

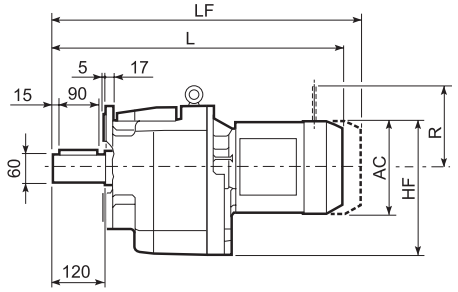

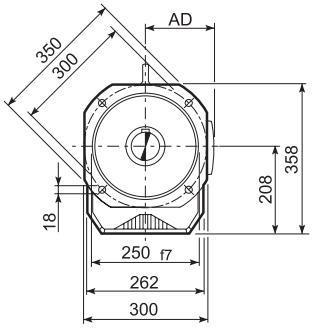

										M...FD M...FA		M...FD		M...FA	
				AC	H	HF	L	AD	Kg	LF	Kg	R	AD	R	AD
C 70 2/3	**S2**	**ME2S**		156	288	286	636.5	119	88	—	—	—	—	—	—
C 70 2/3	**S3**	**ME3S**		195	307.5	305.5	680.5	142	94.5	—	—	—	—	—	—
C 70 2/3	**S3**	**ME3L**		195	307.5	305.5	712.5	142	101	—	—	—	—	—	—
C 70 2/3	**S4**	**ME4**	**MX4**	258	339	337	820.5	193	135	—	—	—	—	—	—
C 70 2/3	**S4**	**ME4LB**	**MX4LA**	258	339	337	855.5	193	143	—	—	—	—	—	—
C 70 2/3	**S5**	**ME5S**	**MX5S**	310	365	363	907	245	163	—	—	—	—	—	—
C 70 2/3	**S5**	**ME5L**	**MX5L**	310	365	363	951	245	179	—	—	—	—	—	—
C 70 4	**S1**	**M1**		138	279	277	659.5	108	88	720.5	91	103	135	124	108
C 70 4	**S2**	**ME2S**		156	288	286	687.5	119	92	—	—	—	—	—	—
C 70 4	**S3**	**ME3S**		195	307.5	305.5	731.5	142	98.5	—	—	—	—	—	—
C 70 4	**S3**	**ME3L**		195	307.5	305.5	763.5	142	104	—	—	—	—	—	—
C 70 4	**S4**	**ME4**	**MX4**	258	339	337	871.5	193	138	—	—	—	—	—	—
C 70 4	**S4**	**ME4LB**	**MX4LA**	258	339	337	906.5	193	146	—	—	—	—	—	—

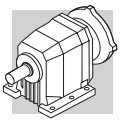

C 70...P(IEC)

P

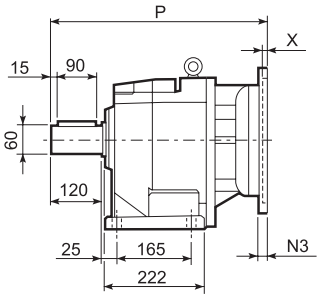

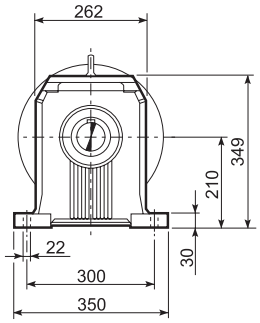

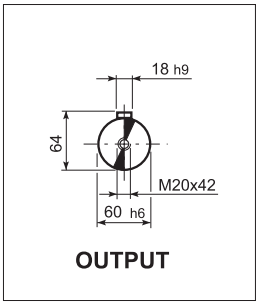

F

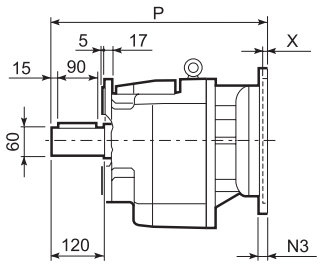

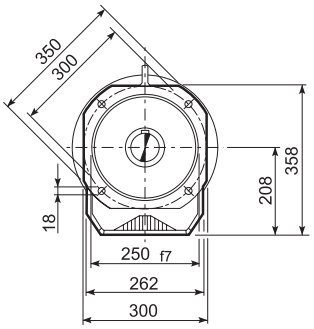

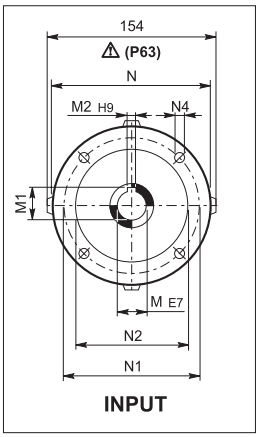

		M	M1	M2	N	N1	N2	N3	N4	X	P	Kg
C 70 2/3	**P80**	19	21.8	6	200	165	130	—	M10x12	4	473	88
C 70 2/3	**P90**	24	27.3	8	200	165	130	—	M10x12	4	473	88
C 70 2/3	**P100**	28	31.3	8	250	215	180	—	M12x16	4.5	483	92
C 70 2/3	**P112**	28	31.3	8	250	215	180	—	M12x16	4.5	483	92
C 70 2/3	**P132**	38	41.3	10	300	265	230	16	14	5	519.5	95
C 70 2/3	**P160**	42	45.3	12	350	300	250	23	18	6	575	107
C 70 2/3	**P180**	48	51.8	14	350	300	250	23	18	6	575	107
C 70 2	**P200**	55	59.3	16	400	350	300	—	M16x25	7	600	129
C 70 4	**P63**	11	12.8	4	140	115	95	—	M8x19	4	504.5	91
C 70 4	**P71**	14	16.3	5	160	130	110	—	M8x16	4.5	504.5	91
C 70 4	**P80**	19	21.8	6	200	165	130	—	M10x12	4	524	92
C 70 4	**P90**	24	27.3	8	200	165	130	—	M10x12	4	524	92
C 70 4	**P100**	28	31.3	8	250	215	180	—	M12x16	4.5	534	96
C 70 4	**P112**	28	31.3	8	250	215	180	—	M12x16	4.5	534	96
C 70 4	**P132**	38	41.3	10	300	265	230	16	14	5	570.5	98

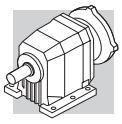

C 70...HS

P

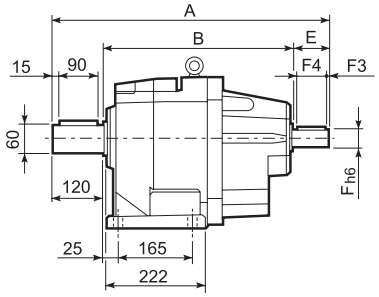

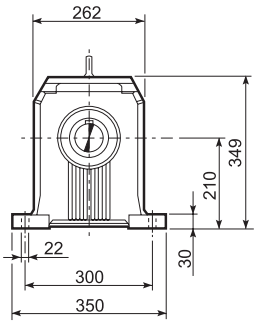

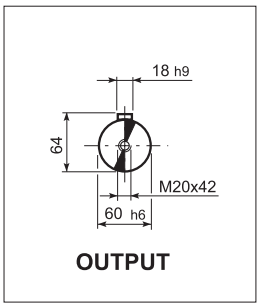

F

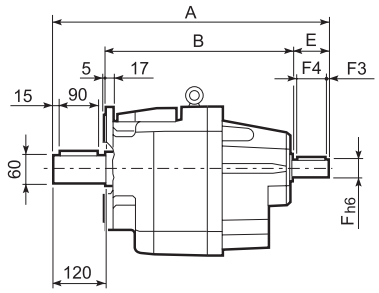

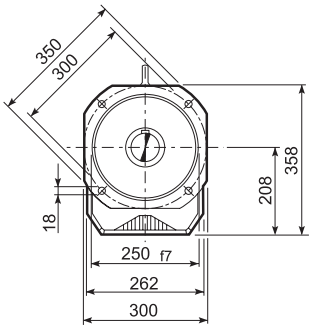

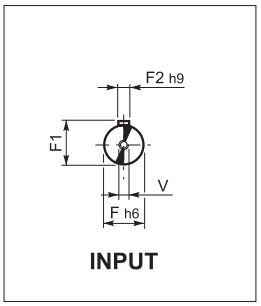

		A	B	E	F	F1	F2	F3	F4	V	Kg
C 70 2	**HS**	657.5	427.5	110	42	45	12	10	90	M12x28	108
C 70 3		657.5	427.5	110	42	45	12	10	90	M12x28	108
C 70 4		593.5	423.5	50	24	27	8	2.5	45	M8x19	94

C 80...M/ME/MX

P

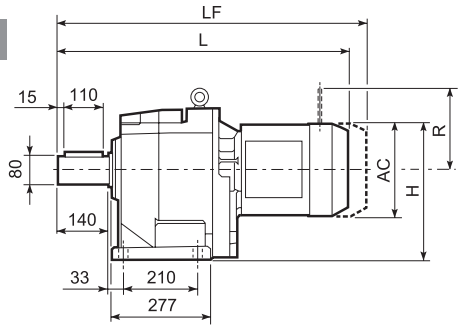

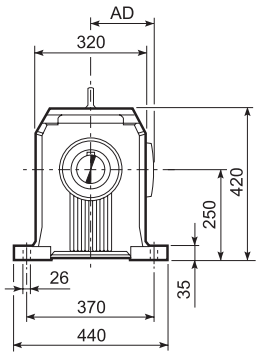

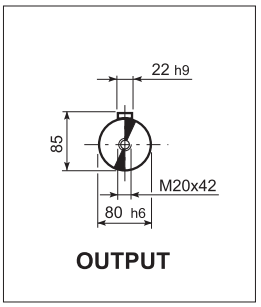

F

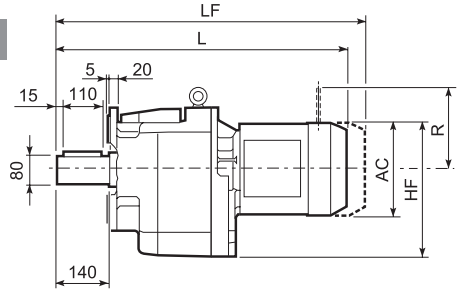

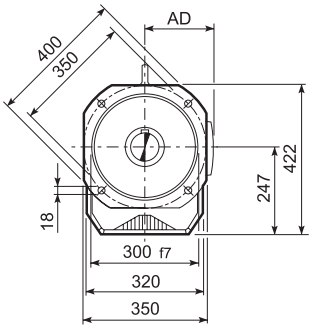

										M...FD M...FA		M...FD		M...FA	
				AC	H	HF	L	AD	Kg	LF	Kg	R	AD	R	AD
C 80 2/3	**S3**	**ME3S**		195	347.5	344.5	742.5	142	140.5	—	—	—	—	—	—
C 80 2/3	**S3**	**ME3L**		195	347.5	344.5	774.5	142	146	—	—	—	—	—	—
C 80 2/3	**S4**	**ME4**	**MX4**	258	379	376	882.5	193	180	—	—	—	—	—	—
C 80 2/3	**S4**	**ME4LB**	**MX4LA**	258	379	376	917.5	193	188	—	—	—	—	—	—
C 80 2/3	**S5**	**ME5S**	**MX5S**	310	405	402	969	245	208	—	—	—	—	—	—
C 80 2/3	**S5**	**ME5L**	**MX5L**	310	405	402	1013	245	224	—	—	—	—	—	—
C 80 4	**S1**	**M1**		138	319	316	733.5	108	133	794.5	136	103	135	124	108
C 80 4	**S2**	**ME2S**		156	328	325	761.5	119	137	—	—	—	—	—	—
C 80 4	**S3**	**ME3S**		195	347.5	344.5	805.5	142	143.5	—	—	—	—	—	—
C 80 4	**S3**	**ME3L**		195	347.5	344.5	837.5	142	149	—	—	—	—	—	—
C 80 4	**S4**	**ME4**	**MX4**	258	379	376	945.5	193	183	—	—	—	—	—	—
C 80 4	**S4**	**ME4LB**	**MX4LA**	258	379	376	980.5	193	191	—	—	—	—	—	—

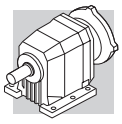

C 80...P(IEC)

P

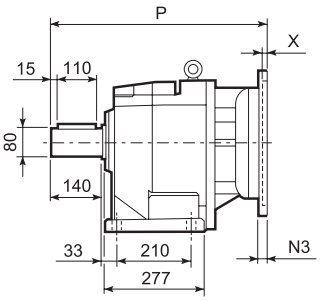

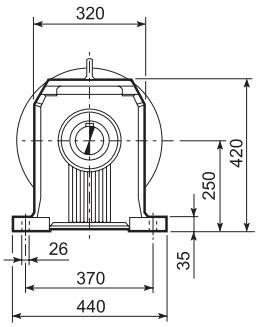

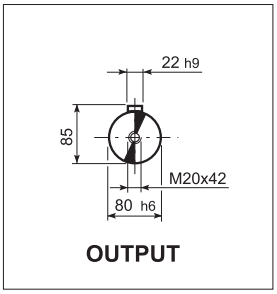

F

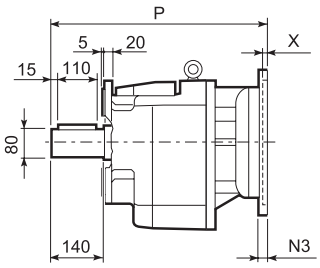

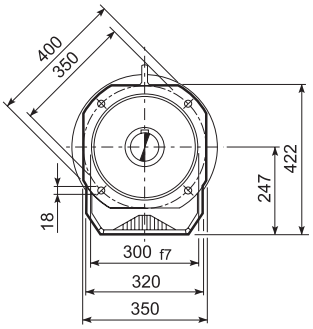

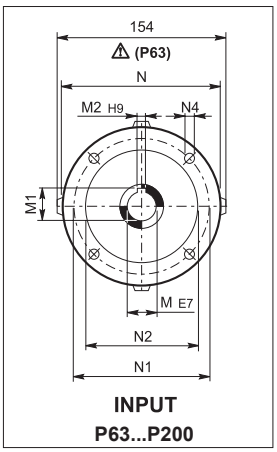

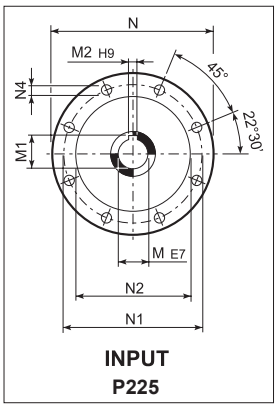

		M	M1	M2	N	N1	N2	N3	N4	X	P	Kg
C 80 2/3	**P80**	19	21.8	6	200	165	130	—	M10x12	4	533	135
C 80 2/3	**P90**	24	27.3	8	200	165	130	—	M10x12	4	533	135
C 80 2/3	**P100**	28	31.3	8	250	215	180	—	M12x16	4.5	543	139
C 80 2/3	**P112**	28	31.3	8	250	215	180	—	M12x16	4.5	543	139
C 80 2/3	**P132**	38	41.3	10	300	265	230	16	14	5	579.5	141
C 80 2/3	**P160**	42	45.3	12	350	300	250	23	18	6	635	154
C 80 2/3	**P180**	48	51.8	14	350	300	250	23	18	6	635	154
C 80 2	**P200**	55	59.3	16	400	350	300	—	M16x25	7	660	176
C 80 2	**P225**	60	64.4	18	450	400	350	25	18	6	705.5	178
C 80 4	**P63**	11	12.8	4	140	115	95	—	M8x19	4	576.5	138
C 80 4	**P71**	14	16.3	5	160	130	110	—	M8x16	4.5	576.5	138
C 80 4	**P80**	19	21.8	6	200	165	130	—	M10x12	4	596	140
C 80 4	**P90**	24	27.3	8	200	165	130	—	M10x12	4	596	140
C 80 4	**P100**	28	31.3	8	250	215	180	—	M12x16	4.5	606	144
C 80 4	**P112**	28	31.3	8	250	215	180	—	M12x16	4.5	606	144
C 80 4	**P132**	38	41.3	10	300	265	230	16	M12x16	5	642.5	146

C 80...HS

P

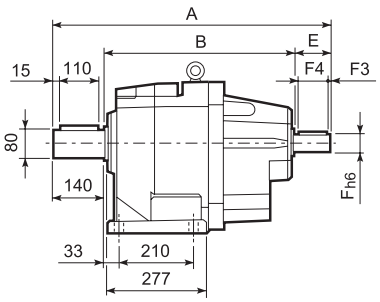

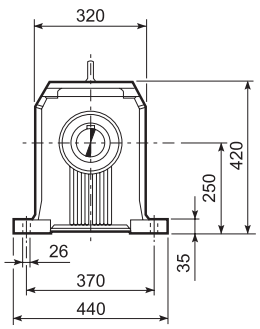

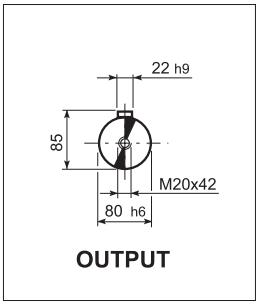

F

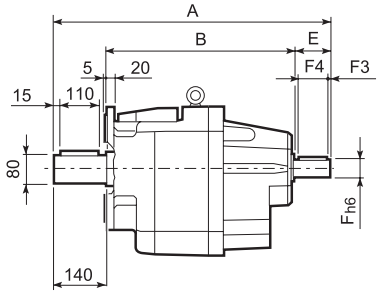

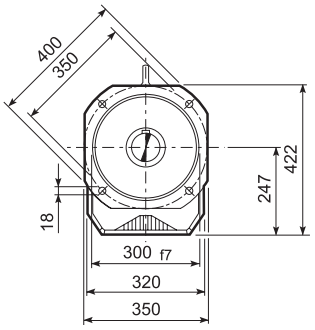

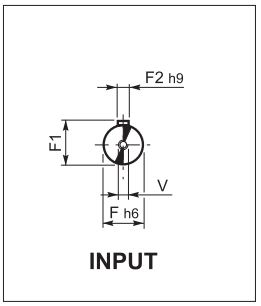

		A	B	E	F	F1	F2	F3	F4	V	Kg
C 80 2		718.5	468.5	110	42	45	12	10	90	M12x28	154
C 80 3	**HS**	718.5	468.5	110	42	45	12	10	90	M12x28	154
C 80 4		666.5	476.5	50	24	27	8	2.5	45	M8x19	141

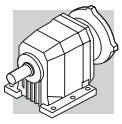

C 90...M/ME/MX

P

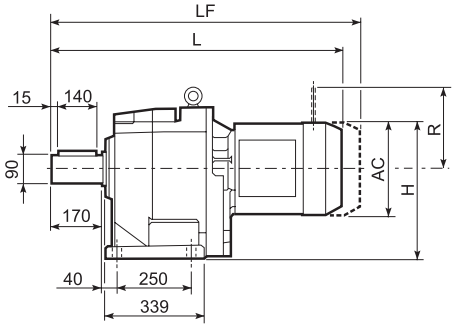

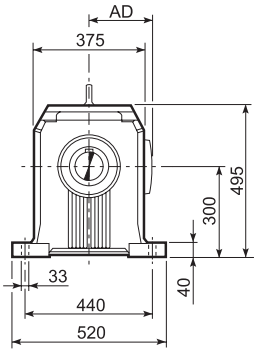

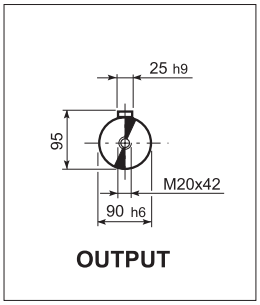

F

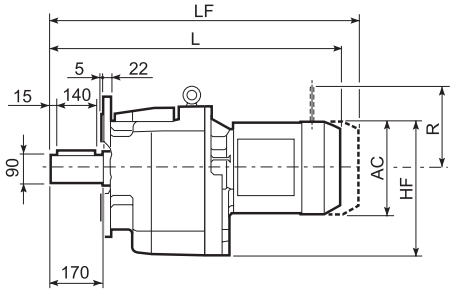

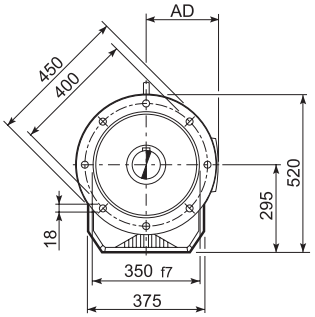

										M...FD M...FA		M...FD		M...FA	
				AC	H	HF	L	AD	Kg	LF	Kg	R	AD	R	AD
C 90 2/3	**S3**	**ME3S**		195	397.5	392.5	852	142	229.5	—	—	—	—	—	—
C 90 2/3	**S3**	**ME3L**		195	397.5	392.5	884	142	236	—	—	—	—	—	—
C 90 2/3	**S4**	**ME4**	**MX4**	258	429	424	992	193	270	—	—	—	—	—	—
C 90 2/3	**S4**	**ME4LB**	**MX4LA**	258	429	424	1027	193	278	—	—	—	—	—	—
C 90 2/3	**S5**	**ME5S**	**MX5S**	310	455	450	1078.5	245	298	—	—	—	—	—	—
C 90 2/3	**S5**	**ME5L**	**MX5L**	310	455	450	1122.5	245	314	—	—	—	—	—	—
C 90 4	**S1**	**M1**		138	369	364	862	108	226	923	228	103	135	124	108
C 90 4	**S2**	**M2S**		156	378	373	891	119	234	962	238	129	146	134	119
C 90 4	**S2**	**ME2S**		156	378	373	891	119	234	—	—	—	—	—	—
C 90 4	**S3**	**ME3S**		195	397.5	392.5	935	142	240.5	—	—	—	—	—	—
C 90 4	**S3**	**ME3L**		195	397.5	392.5	967	142	246	—	—	—	—	—	—
C 90 4	**S4**	**ME4**	**MX4**	258	429	424	1075	193	280	—	—	—	—	—	—
C 90 4	**S4**	**ME4LB**	**MX4LA**	258	429	424	1126.5	193	288	—	—	—	—	—	—

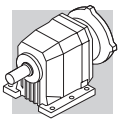

C 90...P(IEC)

P

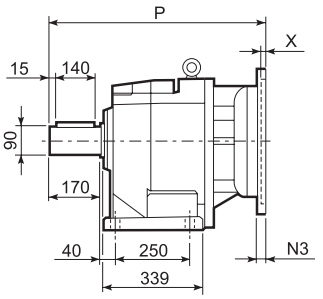

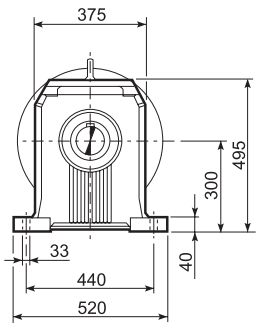

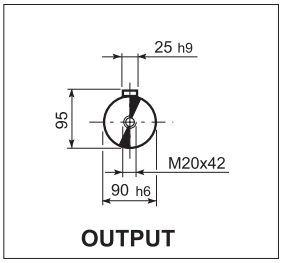

F

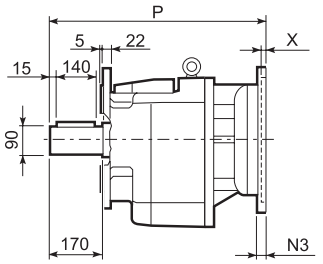

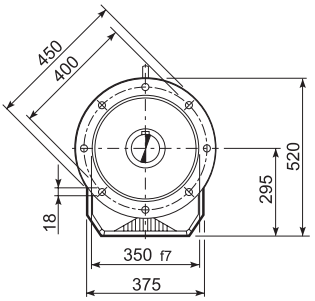

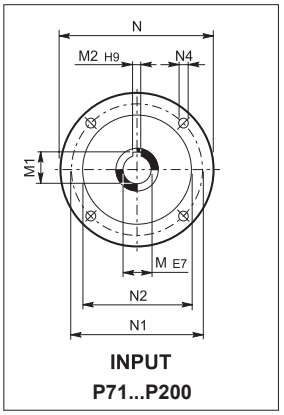

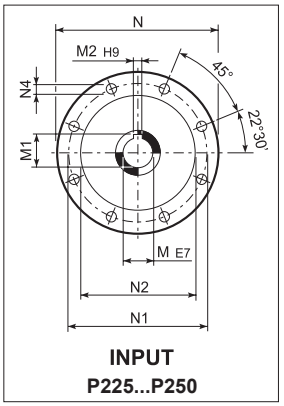

		M	M1	M2	N	N1	N2	N3	N4	X	P	Kg
C 90 2/3	**P80**	19	21.8	6	200	165	130	—	M10x12	4	644.5	229
C 90 2/3	**P90**	24	27.3	8	200	165	130	—	M10x12	4	644.5	229
C 90 2/3	**P100**	28	31.3	8	250	215	180	—	M12x16	4.5	654.5	234
C 90 2/3	**P112**	28	31.3	8	250	215	180	—	M12x16	4.5	654.5	234
C 90 2/3	**P132**	38	41.3	10	300	265	230	16	14	5	691	236
C 90 2/3	**P160**	42	45.3	12	350	300	250	23	18	6	746.5	251
C 90 2/3	**P180**	48	51.8	14	350	300	250	23	18	6	746.5	251
C 90 2/3	**P200**	55	59.3	16	400	350	300	—	M16x25	7	771.5	272
C 90 2/3	**P225**	60	64.4	18	450	400	350	30	18	6	817	273
C 90 2/3	**P250**	65	69.4	18	550	500	450	30	18	6	847	295
C 90 4	**P63**	11	12.8	4	140	115	95	—	M8x19	4	707.5	236
C 90 4	**P71**	14	16.3	5	160	130	110	—	M8x16	4.5	707.5	236
C 90 4	**P80**	19	21.8	6	200	165	130	—	M10x12	4	727	238
C 90 4	**P90**	24	27.3	8	200	165	130	—	M10x12	4	727	238
C 90 4	**P100**	28	31.3	8	250	215	180	—	M12x16	4.5	737	242
C 90 4	**P112**	28	31.3	8	250	215	180	—	M12x16	4.5	737	242
C 90 4	**P132**	38	41.3	10	300	265	230	16	14	5	773.5	244
C 90 4	**P160**	42	45.3	12	350	300	250	23	18	5.5	824	248
C 90 4	**P180**	48	51.8	14	350	300	250	23	18	5.5	824	248

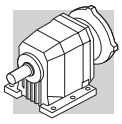

C 90...HS

P

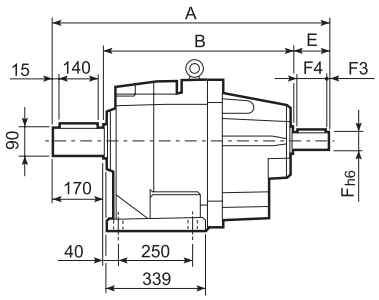

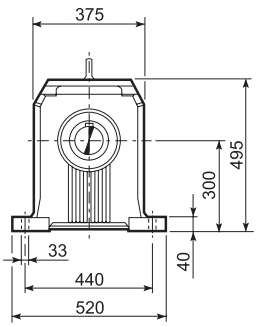

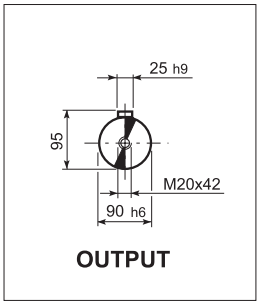

F

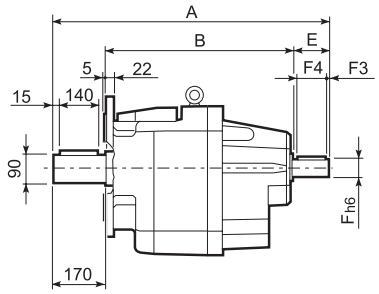

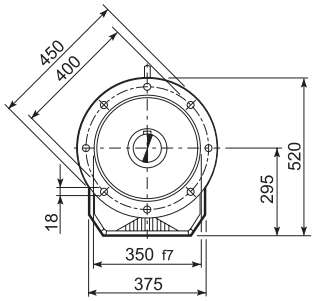

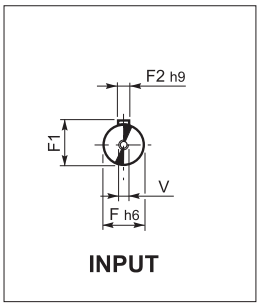

		A	B	E	F	F1	F2	F3	F4	V	Kg
C 90 2		930.5	620.5	140	60	64	18	10	120	M16x36	273
C 90 3	**HS**	930.5	620.5	140	60	64	18	10	120	M16x36	273
C 90 4		797	577	50	24	27	8	2.5	45	M8x19	240

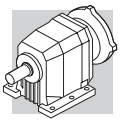

C 100...M/ME/MX

P

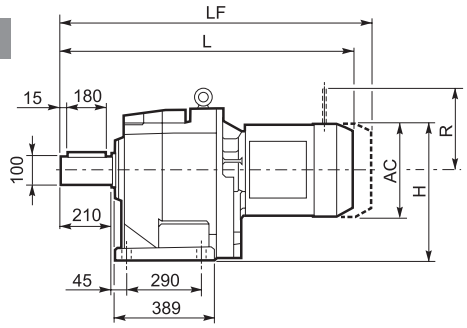

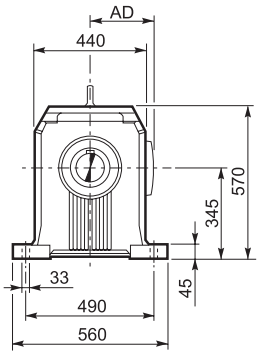

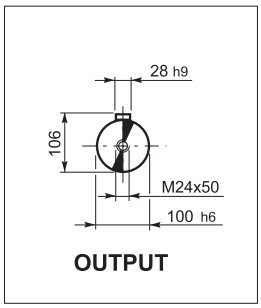

F

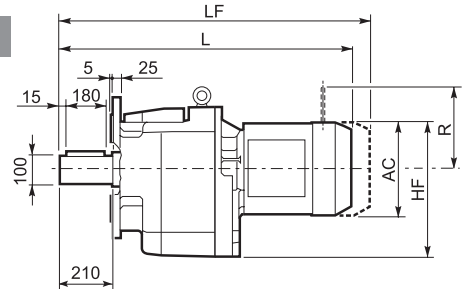

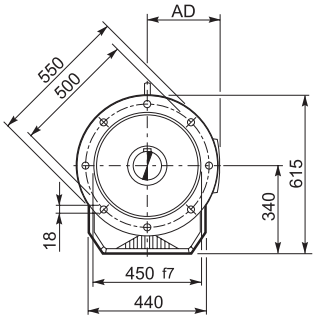

										M...FD M...FA		M...FD		M...FA	
				AC	H	HF	L	AD	Kg	LF	Kg	R	AD	R	AD
C 100 2/3	**S4**	**ME4**	**MX4**	258	474	469	1087	193	392	—	—	—	—	—	—
C 100 2/3	**S4**	**ME4LB**	**MX4LA**	258	474	469	1122	193	400	—	—	—	—	—	—
C 100 2/3	**S5**	**ME5S**	**MX5S**	310	500	495	1173.5	245	420	—	—	—	—	—	—
C 100 2/3	**S5**	**ME5L**	**MX5L**	310	500	495	1217.5	245	436	—	—	—	—	—	—
C 100 4	**S1**	**M1**		138	414	409	956.5	108	346	1027.5	348	103	135	124	108
C 100 4	**S2**	**M2S**		156	423	418	985.5	119	354	1056.5	357	129	146	134	119
C 100 4	**S2**	**ME2S**		156	423	418	985.5	119	354	—	—	—	—	—	—
C 100 4	**S3**	**ME3S**		195	442.5	437.5	1029.5	142	359.5	—	—	—	—	—	—
C 100 4	**S3**	**ME3L**		195	442.5	437.5	1061.5	142	366	—	—	—	—	—	—
C 100 4	**S4**	**ME4**	**MX4**	258	474	469	1169.5	193	400	—	—	—	—	—	—
C 100 4	**S4**	**ME4LB**	**MX4LA**	258	474	469	1204.5	245	408	—	—	—	—	—	—

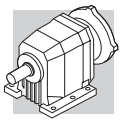

C 100...P(IEC)

P

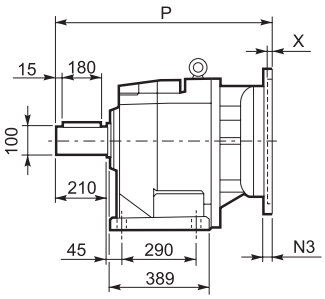

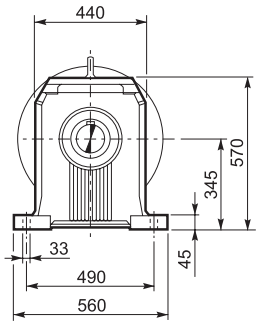

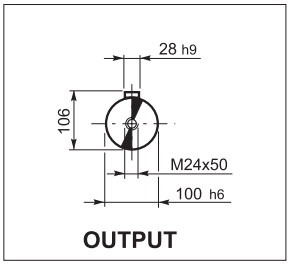

F

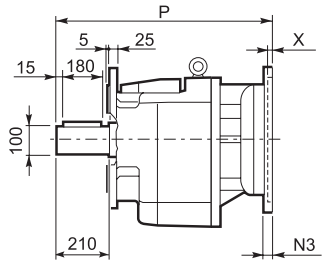

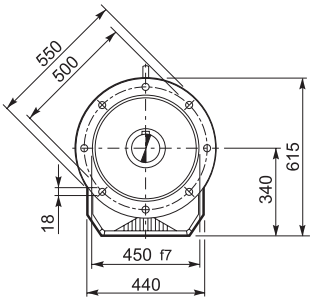

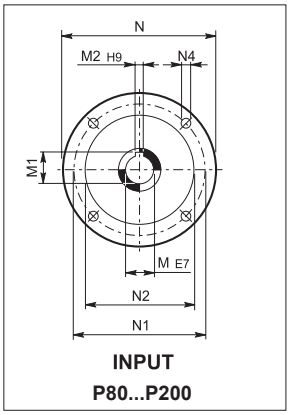

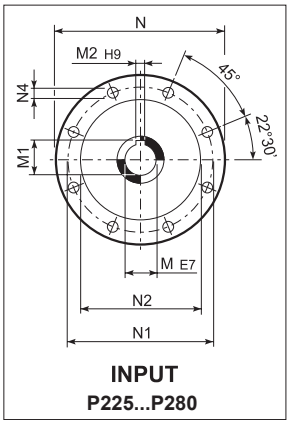

		M	M1	M2	N	N1	N2	N3	N4	X	P	kg
C 100 2/3	**P100**	28	31.3	8	250	215	180	—	M12x16	4.5	749.5	364
C 100 2/3	**P112**	28	31.3	8	250	215	180	—	M12x16	4.5	749.5	364
C 100 2/3	**P132**	38	41.3	10	300	265	230	16	14	5	786	367
C 100 2/3	**P160**	42	45.3	12	350	300	250	23	18	6	841.5	382
C 100 2/3	**P180**	48	51.8	14	350	300	250	23	18	6	841.5	382
C 100 2/3	**P200**	55	59.3	16	400	350	300	—	M16x25	7	866.5	403
C 100 2/3	**P225**	60	64.4	18	450	400	350	30	18	7	912	403
C 100 2/3	**P250**	65	69.4	18	550	500	450	30	18	7	942	426
C 100 2/3	**P280**	75	79.9	20	550	500	450	30	18	6	942	426
C 100 4	**P63**	11	12.8	4	140	115	95	—	M8x19	4	803	369
C 100 4	**P71**	14	16.3	5	160	130	110	—	M8x16	4.5	803	369
C 100 4	**P80**	19	21.8	6	200	165	130	—	M10x12	4	822.5	371
C 100 4	**P90**	24	27.3	8	200	165	130	—	M10x12	4	822.5	371
C 100 4	**P100**	28	31.3	8	250	215	180	—	M12x16	4.5	832.5	375
C 100 4	**P112**	28	31.3	8	250	215	180	—	M12x16	4.5	832.5	375
C 100 4	**P132**	38	41.3	10	300	265	230	16	14	5	869	377
C 100 4	**P160**	42	45.3	12	350	300	250	23	18	5.5	919.5	381
C 100 4	**P180**	48	51.8	14	350	300	250	23	18	5.5	919.5	381

C 100...HS

P

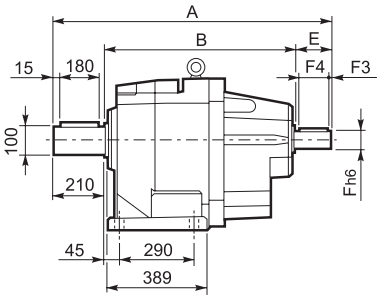

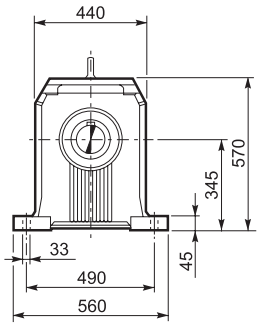

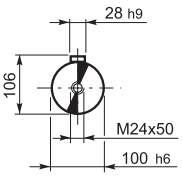

OUTPUT

F

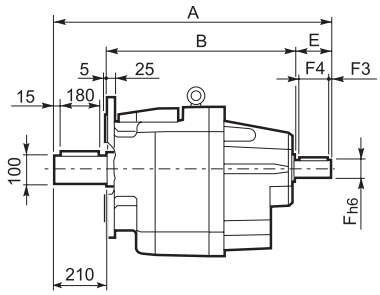

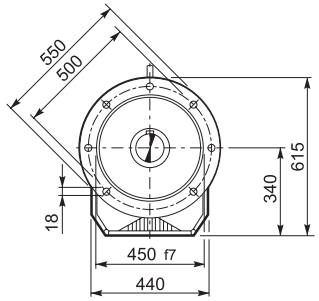

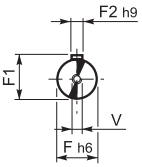

INPUT

		A	B	E	F	F1	F2	F3	F4	V	Kg
C 100 2		1025.5	676	140	60	64	18	10	120	M16x36	409
C 100 3	**HS**	1025.5	676	140	60	64	18	10	120	M16x36	409
C 100 4		892	632	50	24	27	8	2.5	45	M8x19	372

31 KONSTRUKTIVE EIGENSCHAFTEN

Die wichtigsten konstruktiven Eigenschaften sind:
- Baueinheitensystem
- Kompaktheit
- universelle Montage
- hohe Wirkungsgrade
- niedriger Geräuschpegel
- einsatzgehärtete und gehärtete Zahnräder aus legiertem Stahl
- Nicht lackierte Aluminiumgehäuse bei den Größen 05, 10, 20 und 30; hochwiderstandsfähige und lackierte Gußgehäuse bei den anderen Größen
- Antriebs- und Abtriebswellen aus hochwiderstandsfähigem Stahl.

(C 25)

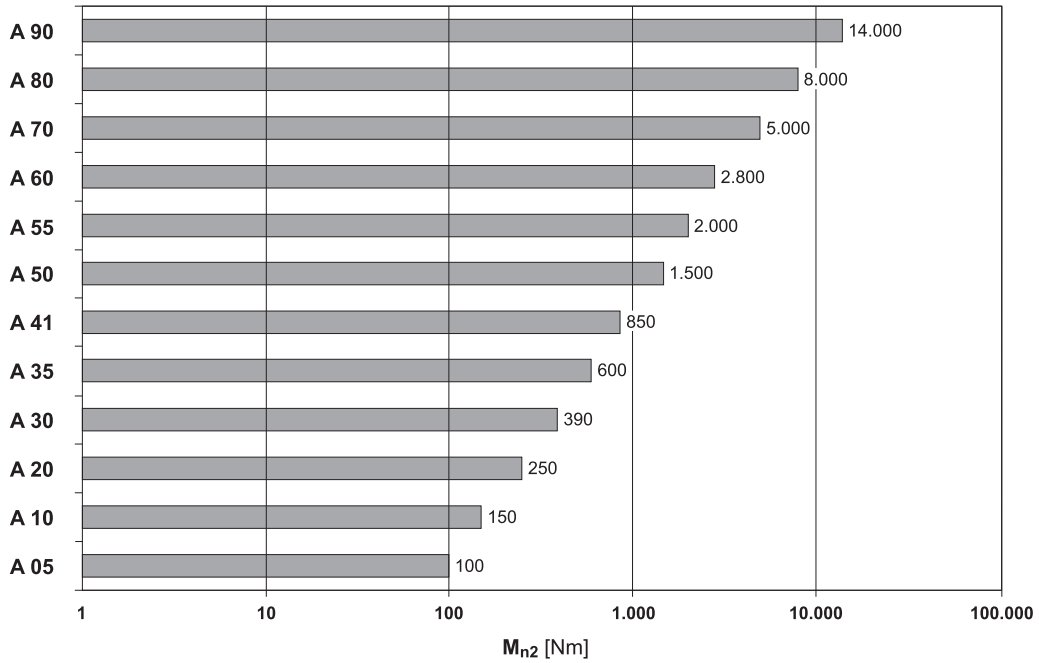

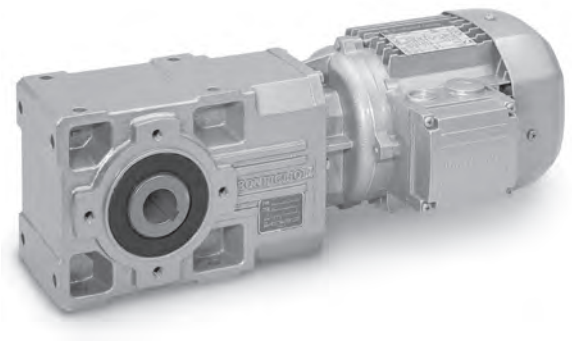

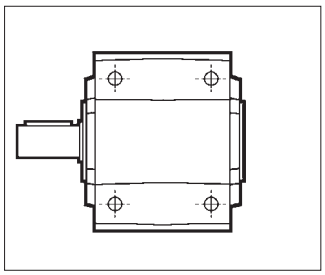

UR

Einzelwellenende-Abtriebswelle

A 10 ... A 90

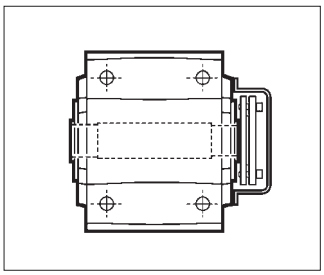

US

Abtriebshohlwelle und Schrumpfscheibe

A 05 ... A 90

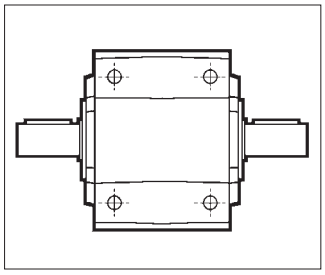

UD

Zweiwellenenden-Abtriebswelle

A 10 ... A 90

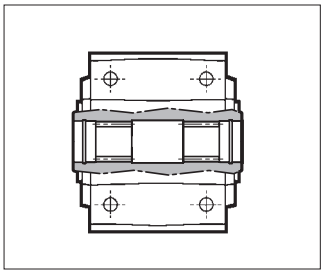

UV

Hohlwelle mit Vielkeilverzahnung DIN 5480

A 20 ... A 60

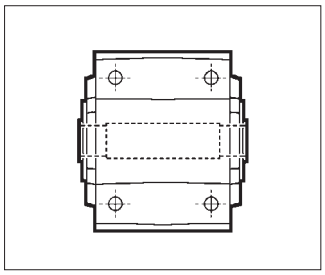

UH

Federnut-Abtriebshohlwelle

A 05 ... A 90

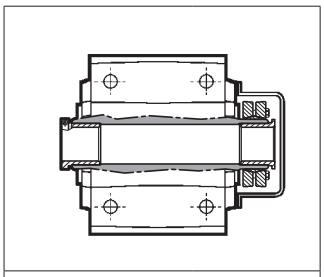

$M_{n2\ max}$ [Nm]	
A 35 QF35	550
A 55 QF55	1900

QF (Quick-fit)

Hohlwelle mit Adapterbuchsen und Schrumpfscheibe

A 10 ... A 60

Bauformen mit aufgesetztem Flansc

Die angegebenen Bilder zeigen die den Grundbauformen anbaubaren Flansche und ihre Positionerung (①,②).

UR F1... UR F2...

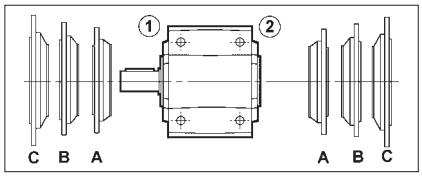

UD F1... UD F2...

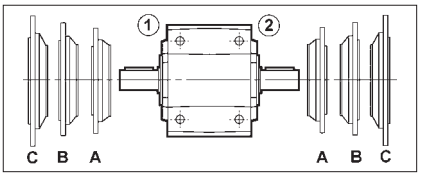

UH... F1... UH... F2...

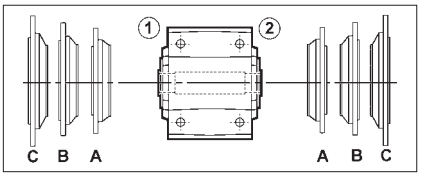

US F1... US F2...

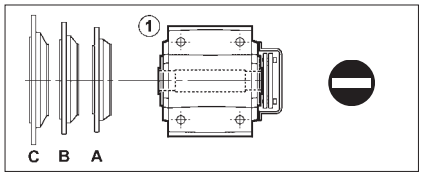

UV F1... UV F2...

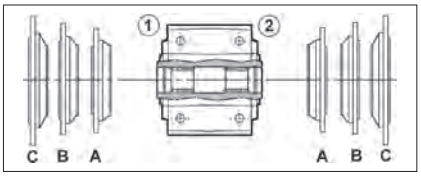

QF...

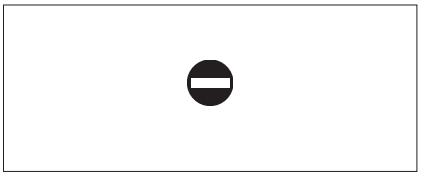

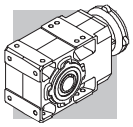

33 BEZEICHNUNG

GETRIEBE

A 35 2 UH40 F1A 49.1 S1 VA .....

OPTIONEN

EINBAULAGEN
B3 (Standard), **B6**, **B7**, **B8**, **VA**, **VB**

BEZEICHNUNG DER ANTRIEBSSEITE

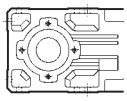

S05 ... S5

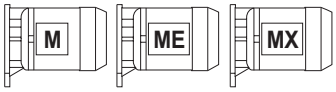

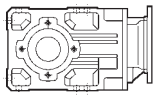

IEC_ **P63 ... P180**

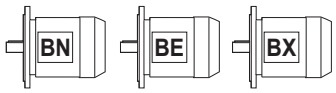

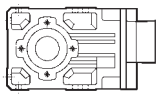

SK_
SC_

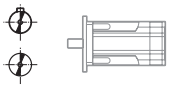

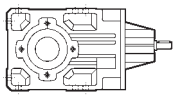

HS

ÜBERSETZUNG

BAUGRÖSSE UND LAGE DER ANTRIEBSFLANSCH
(angeben nur wenn angefragt)

F = Ausführung mit Flansch
1, **2** = Flanschlage
A, **B**, **C** = Flanschgröße

BAUFORM

UH_

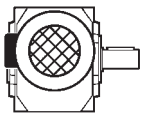

UR
(A 10...A 90)

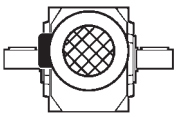

UD
(A 10...A 90)

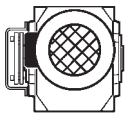

US
(A 05...A 90)

UV
(A 20...A 60)

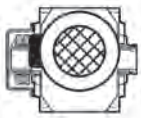

QF
(A 10...A 60)

A 05	A 10	A 20	A 30	A 35	A 41	A 50	A 55	A 60	A 70	A 80	A 90
UH25	**UH25**	**UH30**	**UH35**	**UH40**	**UH45**	**UH50**	**UH60**	**UH60**	**UH70**	**UH80**	**UH90**
—	UH30	UH35	UH40	UH35	UH40	UH55	UH50	UH70	UH80	UH90	UH100

GETRIEBESTUFEN
2 (A 05...A 60), **3** (A 20...A 90), **4** (A 50...A 90)

GETRIEBEBAUGRÖSSE
05, **10**, **20**, **30**, **35**, **41**, **50**, **55**, **60**, **70**, **80**, **90**

TYP: **A** = Kegelradgetriebe

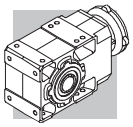

MOTOR | BREMSE

M 1LA 4 230/400-50 IP54 CLF ..... **W FD** 7.5 R SB 220 SA .....

OPTIONEN

BREMSVERSOR-
GUNG

GLEICHRICHTERTYP
AC/DC
NB, **SB**, **NBR**, **SBR**

BREMSENTHANDLÜFTUNG
R, **RM**

BREMSMOMENT

BREMSENTYP
FD (G.S. Bremse)
FA (W.S. Bremse)

KLEMMENKASTENLAGE
W (default), **N**, **E**, **S**

BAUFORM
— (kompaktes Motor)
B5 (IEC Motor)

ISOLIERUNGSKLASSE
CL F standard
CL H option

SCHUTZART
IP55 standard (IP54 - Bremssmotor)

SPANNUNG - FREQUENZ

POLZAHL
2, **4**, **6**, **2/4**, **2/6**, **2/8**, **2/12**, **4/6**, **4/8**

MOTOR-BAUGRÖSSE
0B ... 5LA (kompaktes Motor)
63A ... 280M (IEC - motor)

MOTORTYP
MX = Dreiphasen Kompaktmotor, Klasse IE3 **ME** = Dreiphasen Kompaktmotor, Klasse IE2 **M** = Dreiphasen Kompaktmotor
BX = Dreiphasen IEC Motor, Klasse IE3 **BE** = Dreiphasen IEC Motor, Klasse IE2 **BN** = Dreiphasen IEC Motor

33.1 Getriebe Optionen

AL, AR

Auf Anfrage kann das Getriebe mit einer Rücklaufsperre ausgerüstet werden, um die Drehung der Abtriebswelle in nur einer Richtung zu ermöglichen. In der folgende Tabelle werden die Getriebe angegeben, die mit einer Rücklaufsperre geliefert werden können. Das Rücklaufsperre Gerät RB Option ausschließen.

(C 26)

A 30 2*	A 35 2* ⛔ (5.4_11.8)	A 41 2 ⛔ (5.2; 10.1)	A 50 3	A 55 3	A 60 3	A 70 3	A 80 3	A 90 3
			A 50 4	A 55 4	A 60 4	A 70 4	A 80 4	A 90 4

* Mit dem Rücklaufsperre sind die Servoflanschen Typ S_60A, S_60B und S_80A unmöglich.

Bei Bestellung bitte die gewünschte freie Drehrichtung durch die Option AL oder AR (Tabelle C27) in der Getriebe- oder Motorbezeichnung angeben.

⚠ HINWEIS: Sollte ein Auslösen der Rücklaufsperre wiederholt erforderlich sein, muss kontrolliert werden, dass das Drehmoment am Abtrieb, das sich aus der Applikation ergibt, 70% des Nenndrehmoments M_{n2} für dieses spezifische Getriebe nicht übersteigt.

(C 27)

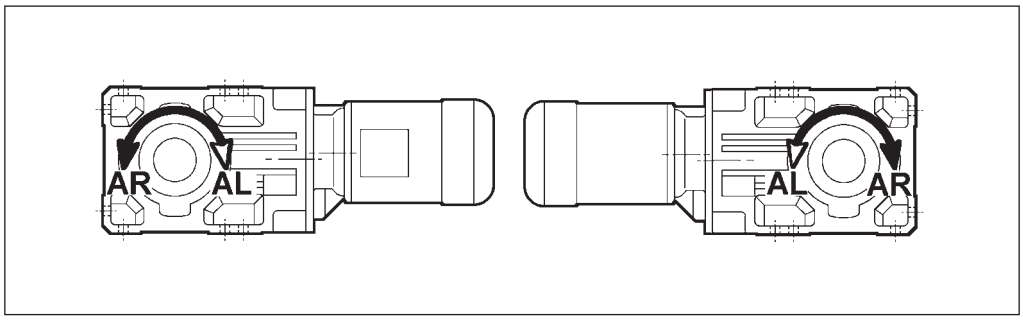

SO

Die Getriebetypen A05, A10, A20, A30, A35 und A41, die normalerweise inklusiv Schmiermittel geliefert werden, werden ohne Öl geliefert.

LO

Die Getriebe A50, A55, A60, A70, A80 und A90, die gewöhnlich ohne Schmiermittel geliefert werden, werden in Übereinstimmung mit der Einbaulage mit dem standardmäßigen von BONFIGLIOLI RIDUTTORI verwendeten synthetischen Schmierstoff gefüllt.

DV

2 Wellendichtringe auf der eintreibenden Welle.(Nur für Kompaktgetriebemotoren).

VV

Wellendichtringe aus Fluor-Elastomer auf der eintreibenden Welle.

PV

Alle Wellendichtringe aus Fluor-Elastomer.

TKL
Für die Getriebe der Größen A70...A90 stehen Taconite Dichtung an der Abtriebswelle, die in Umgebungen mit hohem Aufkommen an abrasiven Stäuben eingesetzt werden können, zur Verfügung.
Diese bestehen aus einer Kombination von Dichtringen, Labyrinthdichtungen und Fettkammern.
Das Fett muss durch regelmäßige Wartung geprüft werden.
Bei dieser Option kommen nur Wellendichtringe aus Fluor-Elastomer zum Einsatz.
Für die Einbaulagen B6 wenden Sie sich bitte an den technischen Service von Bonfiglioli Riduttori.

HDB
Für Anwendungen, die durch besonders hohe Radialkräfte gekennzeichnet sind und für die die zulässigen Radiallasten der Getriebe in Standardausführung nicht ausreichen, können einige Getriebe mit erhöhter zulässiger Radiallast durch Angabe der Option HDB bestellt werden. Die Option ist für die Getriebe der Größen A10 bis A50, mit einseitiger oder zweiseitiger Abtriebswelle verfügbar. Die zulässigen Radiallasten der Getriebe in verstärkter Ausführung sind in der nachfolgenden Tabelle angegeben. Die Werte beziehen sich auf Lasten die in der Mitte der Abtriebswelle angreifen.

(C 28)

HDB	R_{N2}					
	A 10	A 20	A 30	A 35	A 41	A 50
n_1 = 2800	**5500 N**	**6200 N**	**9600 N**	**12000 N**	**15000 N**	**20000 N**
⚠			8970 N @ i=5.4	10200 N @ i=5.4 10600 N @ i=6.4 11000 N @ i=7.0	11500 N @ i=5.2 12700 N @ i=7.1 13300 N @ i=8.3 13700 N @ i=9.2	19000 N @ i=7.7
n_1 = 1400	**5500 N**	**6200 N**	**9600 N**	**12000 N**	**15000 N**	**20000 N**
n_1 = 900	**5500 N**	**6200 N**	**9600 N**	**12000 N**	**15000 N**	**20000 N**
n_1 = 500	**5500 N**	**6200 N**	**9600 N**	**12000 N**	**15000 N**	**20000 N**

Durch die verstärkte Lagerung sind auch höhere Axiallasten zulässig, und zwar:

$$A_{N2} = 0.35 \times R_{n2} \quad (24)$$

Bei Applikationen ohne Radiallasten beträgt die Axialkraft:

$$A_{N2} = 0.70 \times R_{n2} \quad (25)$$

Treten gleichzeitig an beiden Wellenenden der Abtriebswelle Kräfte auf, dann empfiehlt sich zur Prüfung des jeweiligen Falls die Kontaktaufnahme mit dem technischen Kundendienst von Bonfiglioli.

RB
Die Getriebe der Bauarten A10, A20, A30, A35, A41, A50, A55 und A60, deren Lieferung in der Regel mit Winkelspiel-Standardwerten erfolgt, werden in diesem Fall mit reduzierten Winkelspielwerten geliefert (ausschließt Getriebe Optionen AL und AR in diesem Absatz beschriebenen). Die entsprechenden Winkelspielwerte sind in der nachstehenden Tabelle aufgeführt.

(C 29)

		standard		RB	
A05	i =	5.5_12.3 - ⊖(10.6)	10.6_91.6 - ⊖(12.3)	—	
	φ [’]	**28**	**18**		
A10	i =	5.5_12.3 - ⊖(10.6)	10.6_91.6 - ⊖(12.3)	5.5_12.3 - ⊖(10.6)	10.6_91.6 - ⊖(12.3)
	φ [’]	**27**	**17**	**12**	**8**
A20	i =	5.4_12 - ⊖(10.3)	10.3_380.9 - ⊖(12)	5.4_12 - ⊖(10.3)	10.3_380.9 - ⊖(12)
	φ [’]	**23**	**15**	**11**	**7**
A30	i =	5.4_11.8 - ⊖(10.5)	10.5_400.8 - ⊖(11.8)	5.4_11.8 - ⊖(10.5)	10.5_400.8 - ⊖(11.8)
	φ [’]	**22**	**15**	**10**	**7**
A35	i =	5.4_11.8	13.1_393.2	5.4_11.8	13.1_393.2
	φ [’]	**20**	**11**	**9**	**6**
A41	i =	5.2_11.7 - ⊖(10.1)	10.1_376.8 - ⊖(11.7)	5.2-11.7 - ⊖(10.1)	10.1_376.8 - ⊖(11.7)
	φ [’]	**19**	**13**	**9**	**6**
A50	i =	7.7_778.2		7.7_778.2	
	φ [’]	**16**		**7**	
A55	i =	4.9_19.2	23.8_793	4.9_19.2	23.8_793
	φ [’]	**17**	**11**	**8**	**6**
A60	i =	7.9_20.6	25.7_755.4	7.9_20.6	25.7_755.4
	φ [’]	**12**	**9**	**5**	**4**
A70	i =	9.4_21.3	23.5_1715	—	
	φ [’]	**14**	**12**		
A80	i =	9.8_20.9	22.6_1558	—	
	φ [’]	**13**	**11**		
A90	i =	9.7_21	22.3_1632	—	
	φ [’]	**12**	**10**		

Für die Lieferzeiten, wenden Sie sich, bitte, an das Vertriebsnetz Bonfiglioli

OBERFLÄCHENSCHUTZ

Wenn keine besondere Korrosionsschutzklasse gefordert ist, ist die lackierte Oberfläche des Getriebes mindestens mit einem Schutz gegen Korrosion der Klasse C2 nach UNI EN ISO 12944-2 geschützt
Für eine bessere Witterungsbeständigkeit können die Getriebe, durch eine Lackierung des ganzen Getriebes, mit einem Oberflächenschutz der Klassen **C3** und **C4** geliefert werden.

(C 30)

OBERFLÄ-CHENSCHUTZ	Typische Umgebungen	Maximale Ober-flächen-temperatu	Korrosionsschutzklasse nach UNI EN ISO 12944-2
C3	Stadt- und Industrieumgebung mit bis zu 100% relativer Luftfeuchtig-keit (mittlere Luftverschmutzung)	120°C	C3
C4	Industrie- und Küstengebiete und Chemieanlagen mit bis zu 100% relativer Luftfeuchtigkeit (hohe Luftverschmutzung)	120°C	C4

Getriebe mit einem optionalen Korrosionsschutz der Klassen **C3** oder **C4** sind in einer Auswahl von Farben verfügbar. Wenn keine spezielle Farbe gefordert ist, (siehe Option „Lackierung“) ist der Decklack in RAL 7042. Unsere Getriebe können auch mit Oberflächenschutz der Klasse **C5** nach UNI EN ISO 12944-2 versehen werden. Für weitere technische Informationen wenden Sie bitte an unseren Technischen Service.

LACKIERUNG

Getriebe mit Oberflächenschutz der Klasse C3 oder C4, sind in den, in der folgenden Liste aufgelisteten Farben, verfügbar.

(C 31)

LACKIERUNG	Farbe	RAL Nummer
RAL7042*	Traffic Grey A	7042
RAL5010	Gentian Blue	5010
RAL9005	Jet Black	9005
RAL9006	White Aluminium	9006
RAL9010	Pure White	9010

* Die Getriebe werden in dieser Standardfarbe geliefert, wenn keine andere Farbe angegeben ist.

Hinweis – Die Option “Lackierung” kann nur im Zusammenhang mit dem Oberflächenschutz spezifiziert werden.

NACHWEISE

AC - Konformitätsbescheinigung Dokument mit dessen Ausstellung die Konformität des Produkts mit dem Auftrag, und dessen Konstruktion in Konformität mit den vom Qualitätsmanagementsystem von Bonfiglioli Riduttori vorgesehenen Standardfertigungs- und -kontrollverfahren bescheinigt wird.

CC – Prüfzeugnis
Die Bestellung führt zur Durchführung von Kontrollen der Konformität mit dem Auftrag, allgemeinen Sichtkontrollen und instrumentalen Prüfungen der Passmaße. Des Weiteren werden allgemeine Betriebskontrollen bei Leerlauf sowie Prüfungen der Funktionalität der Dichtungen bei Stillstand und während des Betriebs durchgeführt. Die Prüfung wird anhand einer Stichprobe des Versandloses durchgeführt.

33.2 Zubehör

siehe Abschnitt 45 des Kataloges.

33.3 Optionen Motoren

AA, AC, AD
Geben die Lage des Bremslüfterhebels zum Klemmenkasten an. Standard is 90° im Uhrzeigersinn beim Ansehen der Lüfterradseite.
AA = 0°, AC = 180°, AD = 90° entgegen dem Uhrzeigersinn.

AL, AR
Für Getriebemotoren mit Kompaktmotor der Baureihe M oder ME steht die Option Rücklaufsperre zur Verfügung, welche direkt am Motor installiert ist und im Abschnitt über die Elektromotoren in diesem Katalog beschrieben wird. Die folgende Tabelle zeigt die freie Drehrichtung des Getriebemotors, anhand welcher die Option entsprechend gewählt werden muss.

(C 32)

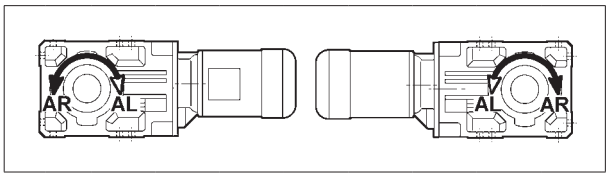

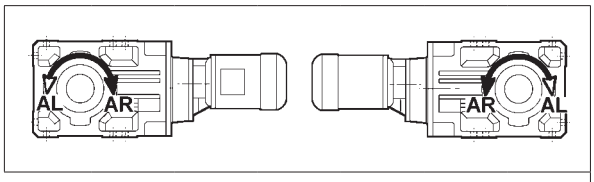

2x	A 05	A 10	A 20	A 30	A 35	A 41	A 50	A 60
3x	A 60	A 70	A 80	A 90				
4x	A 50	A 55						

2x	A 55					
3x	A 20	A 30	A 35	A 41	A 50	A 55
4x	A 60	A 70	A 80	A 90		

CF
Kapazitive Filter.

D3
3 Bimetallfühler in den Wicklungen mit Temperatur von 150°C.

E3
3 Kaltleiterthermistoren in den Wicklungen mit Temperatur von 150°C.

F1
Schwungrad zum sanften Anfahren.

H1
Wicklungsheizung Standardspannung 1~ 230 V ±10%

PN
Die 60 Hz-Leistung entspricht der Normalleistung bei 50 Hz.

PS
Zweites Wellenende (schließt die Optionen RC und U1 aus).

RC
Schutzdach (schließt Option PS aus).

RV
Läufer in Vibrationsgrad B ausgewuchtet.

TC
Bei dieser Option handelt es sich um ein Schutzdach mit einem Textilnetz, dessen Einsatz empfohlen wird wenn der Motor in Bereichen der Textilindustrie installiert wird. Diese Option schließt die Möglichkeit der Optionen EN_ .

TP
Tropenfestigkeit.

U1
Fremdbelüftung (Nicht anwendbar zusammen mit den Optionen PS und CUS).

U2
Fremdlüfter ohne Klemmenkasten, bereits intern verkabelt. Nicht anwendbar zusammen mit den Optionen PS und CUS. Verfügbar für folgende Motoren: BN 71, BE 80 ... BE 132, M1, ME2 ... ME4.

Weitere Informationen zu Optionen, finden Sie im Abschnitt “Elektromotoren”.

34 SCHMIERUNG

Die Schmierung der Getriebe von Bonfiglioli erfolgt durch eine Kombination aus Ölbad- und Spritzschmierung.
Die Getriebegrößen A 05, A 10, A 20, A 30, A 35 und A 41 sind ab Werk mit einer Lebensdauerschmierung versehen.
Die Getriebe ab der Größe A 50 werden ohne Ölfüllung ausgeliefert. Vor der Inbetriebnahme muss deshalb auf das Einfüllen der richtigen Ölfüllmenge geachtet werden !
In beiden Fällen, abhängig von der Ausführung, ist es notwendig vor der Inbetriebnahme des Getriebes den Verschlußstopfen durch den Entlüftungsstopfen, der mitgeliefert wird, zu ersetzen.
Hinweise zu der Position der Serviceschrauben/Stopfen und Angaben zu den Schmierstoffmengen finden Sie in der Betriebs- und Wartungsanleitung (auf www.bonfiglioli.com verfügbar).
Die mit Lebensdauerschmierung gelieferten Größen sind mit synthetischem Öl auf Polyglykolbasis gefüllt. Falls dieses Öl nicht verunreinigt wird, ist während der Lebensdauer des Getriebes kein Ölwechsel nötig.
Die Getriebe dürfen bei einer Umgebungstemperatur von -20°C bis +40°C betrieben werden.
Allerdings darf ein Start unter Last bei -20°C bis -10°C erst nach stufenweiser und gleichmäßiger Vorwärmung erfolgen. Anderfalls muss das Anfahren ohne Last erfolgen.
Die Last darf erst zugeschaltet werden, wenn die Getriebeeinheit eine Temperatur von mindestens -10° oder höher erreicht hat.

35 EINBAULAGEN UND LAGE DES KLEMMENKASTENS

Die Angaben zur Lage des Klemmenkastens beziehen sich auf das von der Lüfterseite her betrachtete Getriebe. Die Standardorientierung ist schwarz hervorgehoben (W).

Winkellage des Handlüfterhebels.
Bei Bremsmotoren wird der Handlüfterhebel (auf Anfrage) standardmäßig auf 90° gegenüber des Klemmkastens (AB- Anordnung) geliefert; wird eine andere Anordnung verlangt, muß dies bei der Bestellung durch die geeignete Option angegeben werden.

(C 33)

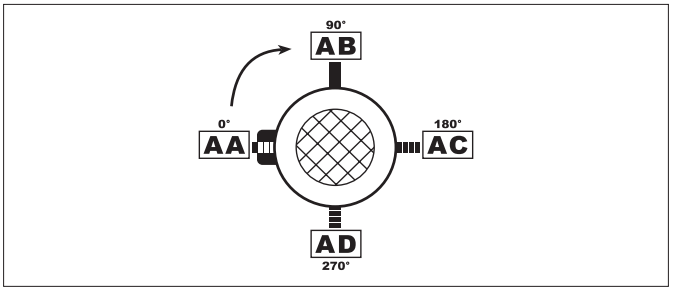

A ...

B3

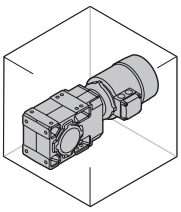
_S

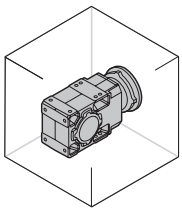
_P(IEC) _SK / _SC

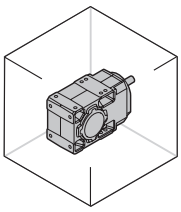
_HS

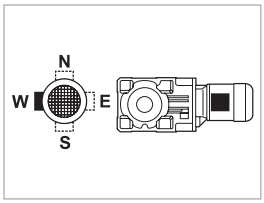

B6

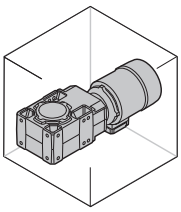
_S

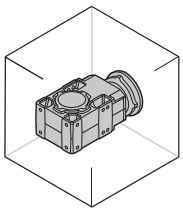
_P(IEC) _SK / _SC

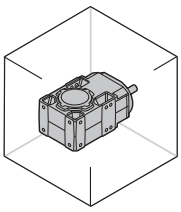
_HS

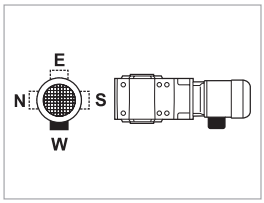

B7

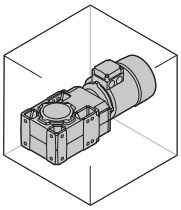
_S

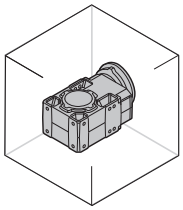
_P(IEC) _SK / _SC

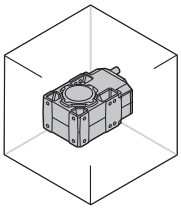
_HS

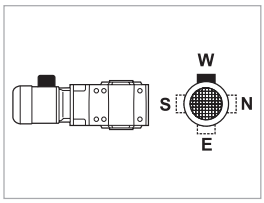

B8

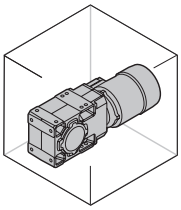
_S

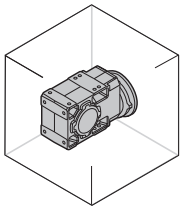
_P(IEC) _SK / _SC

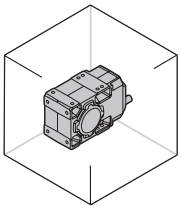
_HS

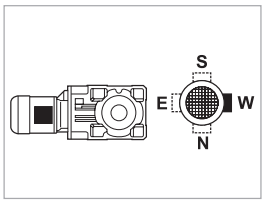

VA

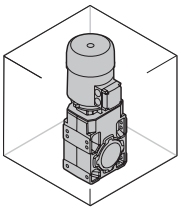
_S

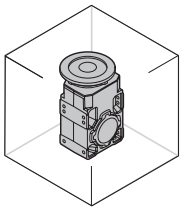
_P(IEC) _SK / _SC

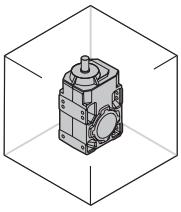
_HS

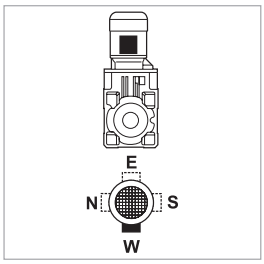

VB

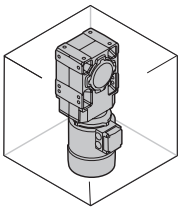
_S

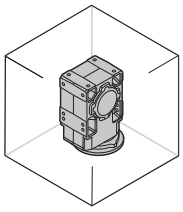
_P(IEC) _SK / _SC

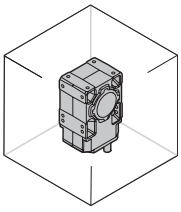
_HS

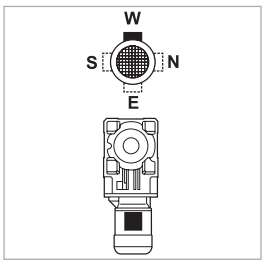

W = Default

36 RADIALKRÄFTE

Die mit den Antriebs- und/oder Abtriebswellen des Getriebes verbundenen Antriebsorgane bilden Kräfte, die in radiale Richtung auf die Welle selbst wirken.
Das Ausmaß dieser Kräfte muß mit der Festigkeit des Systems aus Getriebewelle/-lager kompatibel sein, insbesondere muß der absolute Wert der auftretenden Belastung (R_{c1} für Antriebswelle und R_{c2} für Abtriebswelle) unter dem in den Tabellen der Technischen Daten angegebenen Nennwert (R_{n1} für Antriebswelle und R_{n2} für Abtriebswelle) liegen.
In den nachstehenden Formeln bezieht sich die Angabe (1) auf die Maße der Antriebswelle, die Angabe (2) auf die Abtriebswelle.
Die von einem externen Antrieb erzeugte Kraft kann, recht genau, anhand der nachstehenden Formel berechnet werden:

$$R_{c1}[N] = \frac{2000 \cdot M_1[Nm] \cdot K_r}{d\,[mm]} \quad ; \quad R_{c2}[N] = \frac{2000 \cdot M_2[Nm] \cdot K_r}{d\,[mm]} \qquad (26)$$

(C 34)

M_1 [Nm]	Drehmoment auf die Antriebswelle
M_2 [Nm]	Drehmoment auf die Abtriebswelle
d [mm]	Teilkreisdurchmesser von Bewegungselement, der auf der Abtriebswelle aufgeschrumpft ist
K_r = 1	Kettenantrieb

K_r = 1,25	Zahnradantrieb
K_r = 1,5	Antrieb über Keilriemen
K_r = 2,0	Antrieb über Flachriemen

In Abhängigkeit zum Kraftanangriffspunkt an der Welle erfolgt die Kontrolle hinsichtlich der Kompatibilität in unterschiedlicher Weise und insbesondere:

(C 35)

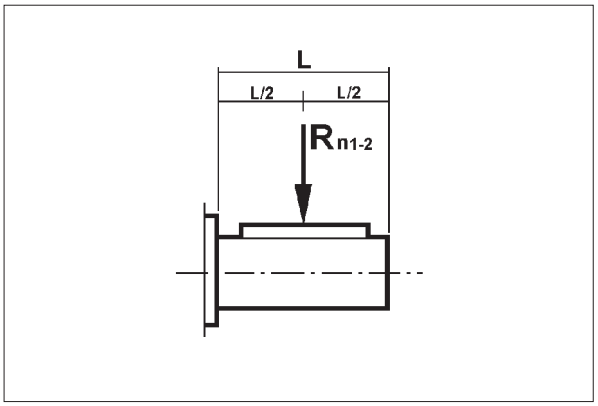

(C 36)

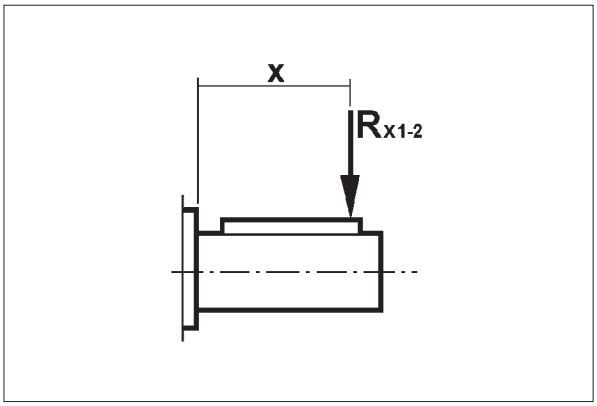

a) Kraftangriffspunkt in der Mitte, Tab. (C35)

Der zuvor errechnete Wert muß mit dem im Katalog angegebenen Nennwert verglichen werden. Es muß sich folgendes ergeben:

$R_{c1} \leq R_{n1}$ [Antriebswelle]

oder

$R_{c2} \leq R_{n2}$ [Abtriebswelle]

b) Von der Mitte versetzter Kraftangriffspunkt Tab. (C36)

Der auf einer Distanz “x” vom Wellenansatz liegende Kraftangriffspunkt erfordert eine erneute Berechnung des für diesen Abstand zulässigen Werts.
Der neue Wert wird mit den Symbolen R_{x1} (Antrieb) und R_{x2} (Abtrieb) gekennzeichnet und unter Anwendung der nachstehenden Faktorenberechnung aus den Katalog- werten R_{n1} und R_{n2}:

$$\frac{a}{b+x} \qquad (27)$$

(C 37)

	Getriebekonstanten					
	Abtriebswelle			Antriebswelle		
	a	**b**	**c**	**a**	**b**	**c**
A 05 2	116	86	450	—	—	—
A 10 2	123	101	600	21	1	300
A 20 2	150	120	750	40	20	350
A 20 3	150	120	750	21	1	300
A 30 2	168	138	900	38.5	18.5	350
A 30 3	168	138	900	21	1	300
A 35 2	182.5	147.5	950	38.5	18.5	350
A 35 3	182.5	147.5	950	21	1	300
A 41 2	198	158	1050	49.5	24.5	450
A 41 3	198	158	1050	40	20	350
A 50 2 - A 50 3	242.5	201.5	1300	49.5	24.5	450
A 50 4	242.5	201.5	1300	38.5	18.5	350
A 55 2 - A 55 3	231.5	179	1300	49.5	24.5	450
A 55 4	231.5	179	1300	38.5	18.5	350
A 60 2 - A 60 3	242.5	190	1550	55.5	25.5	600
A 60 4	242.5	190	1550	49.5	24.5	450
A 70 3	295.5	230.5	1900	86	31	1000
A 70 4	295.5	230.5	1900	49.5	24.5	450
A 80 3	345	280	2400	86	31	1000
A 80 4	345	280	2400	49.5	24.5	450
A 90 3	432	327	3000	116	46	1400
A 90 4	432	327	3000	49.5	24.5	450

Das Kontrollverfahren zieht die nachstehend beschriebenen Schritte nach sich.

ANTRIESBWELLE

1. Berechnung von:

$$R_{x1} = R_{n1} \cdot \frac{a}{b + x} \qquad (28)$$

HINWEIS unter der Bedingung, daß:

$$\frac{L}{2} \leq x \leq c \qquad (29)$$

Dies als Voraussetzung, muß sich folgendes ergeben:

$$R_{c1} \leq R_{x1} \qquad (30)$$

ABTRIEBSWELLE

1. Berechnung von:

$$R_{x2} = R_{n2} \cdot \frac{a}{b + x} \qquad (31)$$

HINWEIS unter der Bedingung, daß:

$$\frac{L}{2} \leq x \leq c \qquad (32)$$

Dies als Voraussetzung, muß sich folgendes ergeben:

$$R_{c2} \leq R_{x2} \qquad (33)$$

37 AXIALKRÄFTE, A_{n1}, A_{n2}

Die Werte der zulässigen, auf die Antriebswelle [A_{n1}] und auf die Abtriebswelle [A_{n2}] einwirkenden Axialkräfte können unter Bezugnahme auf den jeweiligen Wert der Radialkraft [R_{n1}] und [R_{n2}] anhand der nachstehenden Angaben berechnet werden:

$$A_{n1} = R_{n1} \cdot 0.2$$
$$A_{n2} = R_{n2} \cdot 0.2 \qquad (34)$$

Die so errechneten Werte der zulässigen Axialkräfte beziehen sich auf den Fall, in dem die Axialkräfte gleichzeitig mit den Nennradialkräften auftreten.
Nur im Fall, dass keine Radialbelastung auf die Getriebewelle wirkt, ist der Wert der zulässigen Axialbelastung [A_n] gleich 50% der zulässigen Radialbelastung [R_n] bezogen auf die gleiche Welle.
Bei sehr hohen Axialkräften oder stark erhöhten Radialkräften, wird im Hinblick auf eine genaue Kontrolle empfohlen, sich mit dem Technischen Kundendienst der Bonfiglioli Riduttori in Verbindung zu setzen.

38 WELLENDREHRICHTUNG

Die in der folgende Tabelle gezeigten Bilder zeigen die Standarddrehrichtungen der 2-, 3- und 4-stufigen Kegelstirnradgetrieben.

(C 38)

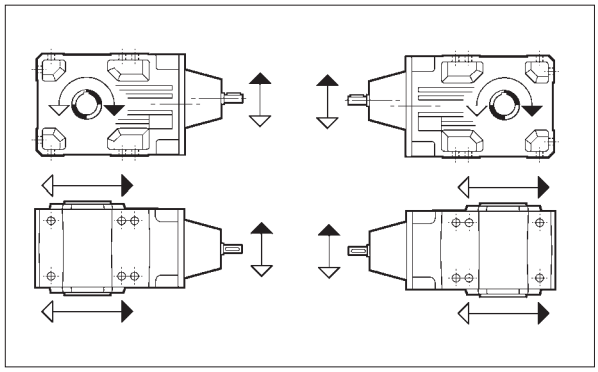

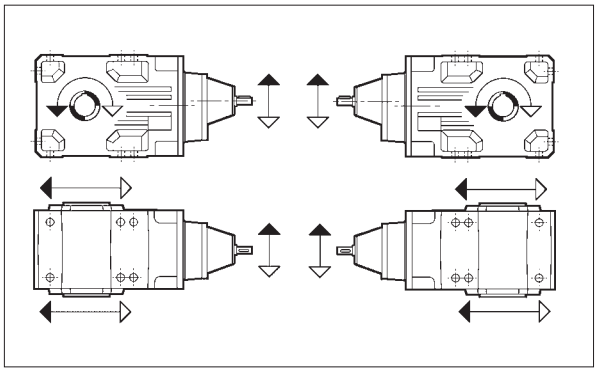

2x	A 05	A 10	A 20	A 30	A 35	A 41	A 50	A 60
3x	A 60	A 70	A 80	A 90				
4x	A 50	A 55						

2x	A 55					
3x	A 20	A 30	A 35	A 41	A 50	A 55
4x	A 60	A 70	A 80	A 90		

Die Auswahl der Motoren ohne Bremse erfolgt nach den Vorgaben der Verordnung EG 640/2009 (siehe abschnitt **M** dieses Katalogs). Für Nennleistungen unter 0,75 kW können die BN/M-Motoren vorgesehen werden.
Die Verordnung EG 640/2009 gilt nicht für die Bremsmotoren, d.h., bei der Auswahl der Bremsmotoren sind die BN/M-Motoren in Betracht zu ziehen, ohne den Wert der Nennleistung zu berücksichtigen.
Die BX, BE, MX und ME-Bremsmotoren sind auf Anfrage verfügbar.

0.09 kW

n_2 min-1	M_2 Nm	S	i	R_{n2} N	IE1		IEC IE1	
0.51	1492	3.4	1715	50000			**A704_1715 P63 BN63A6**	299
1.1	677	2.2	778.2	20000			**A504_778.2 P63 BN63A6**	287
1.2	616	2.4	707.9	20000			**A504_707.9 P63 BN63A6**	287
1.4	549	2.7	631.2	20000			**A504_631.2 P63 BN63A6**	287
1.5	499	3.0	574.2	20000			**A504_574.2 P63 BN63A6**	287
1.7	461	3.3	529.5	20000			**A504_529.5 P63 BN63A6**	287
2.2	356	1.0	400.8	9600	**A303_400.8 S05 M05A6**	274	**A303_400.8 P63 BN63A6**	275
2.6	302	1.7	339.3	12000	**A353_339.3 S05 M05A6**	278	**A353_339.3 P63 BN63A6**	279
3.0	259	3.3	291.7	15000	**A413_291.7 S05 M05A6**	282	**A413_291.7 P63 BN63A6**	283
3.5	221	2.7	248.1	12000	**A353_248.1 S05 M05A6**	278	**A353_248.1 P63 BN63A6**	279
4.1	193	2.1	216.6	9600	**A303_216.6 S05 M05A6**	274	**A303_216.6 P63 BN63A6**	275
4.9	159	1.6	178.3	6200	**A203_178.3 S05 M05A6**	270	**A203_178.3 P63 BN63A6**	271
5.8	134	2.8	150.7	9600	**A303_150.7 S05 M05A6**	274	**A303_150.7 P63 BN63A6**	275
6.8	115	2.2	129.1	6200	**A203_129.1 S05 M05A6**	270	**A203_129.1 P63 BN63A6**	271
8.1	97	2.5	109.2	6200	**A203_109.2 S05 M05A6**	270	**A203_109.2 P63 BN63A6**	271
9.6	84	1.5	91.6	5500	**A102_91.6 S05 M05A6**	266	**A102_91.6 P63 BN63A6**	267
11.5	70	2.1	76.4	5500	**A102_76.4 S05 M05A6**	266	**A102_76.4 P63 BN63A6**	267
13.3	61	2.5	65.9	5500	**A102_65.9 S05 M05A6**	266	**A102_65.9 P63 BN63A6**	267
15.0	54	2.8	58.6	5500	**A102_58.6 S05 M05A6**	266	**A102_58.6 P63 BN63A6**	267
17.2	47	3.2	51.3	5500	**A102_51.3 S05 M05A6**	266	**A102_51.3 P63 BN63A6**	267
19.4	42	2.4	45.4	4250	**A052_45.4 S05 M05A6**	263	**A052_45.4 P63 BN63A6**	263
21.5	38	2.7	40.9	4120	**A052_40.9 S05 M05A6**	263	**A052_40.9 P63 BN63A6**	263
25.1	32	3.1	35.1	3950	**A052_35.1 S05 M05A6**	263	**A052_35.1 P63 BN63A6**	263
27.3	30	3.4	32.2	3850	**A052_32.2 S05 M05A6**	263	**A052_32.2 P63 BN63A6**	263
31	26	3.8	28.6	3720	**A052_28.6 S05 M05A6**	263	**A052_28.6 P63 BN63A6**	263
35	23	4.4	25.5	3590	**A052_25.5 S05 M05A6**	263	**A052_25.5 P63 BN63A6**	263
37	22	4.6	23.8	3520	**A052_23.8 S05 M05A6**	263	**A052_23.8 P63 BN63A6**	263
41	19.6	5.3	21.4	3410	**A052_21.4 S05 M05A6**	263	**A052_21.4 P63 BN63A6**	263
47	17.1	5.9	18.6	3270	**A052_18.6 S05 M05A6**	263	**A052_18.6 P63 BN63A6**	263
53	15.1	6.8	16.4	3150	**A052_16.4 S05 M05A6**	263	**A052_16.4 P63 BN63A6**	263
63	12.8	7.8	13.9	2990	**A052_13.9 S05 M05A6**	263	**A052_13.9 P63 BN63A6**	263
72	11.3	8.8	12.3	2880	**A052_12.3 S05 M05A6**	263	**A052_12.3 P63 BN63A6**	263
83	9.7	10.3	10.6	2740	**A052_10.6 S05 M05A6**	263	**A052_10.6 P63 BN63A6**	263
92	8.8	11.3	9.6	2670	**A052_9.6 S05 M05A6**	263	**A052_9.6 P63 BN63A6**	263
103	7.8	13.2	8.5	2570	**A052_8.5 S05 M05A6**	263	**A052_8.5 P63 BN63A6**	263
122	6.6	15.1	7.2	2440	**A052_7.2 S05 M05A6**	263	**A052_7.2 P63 BN63A6**	263
139	5.8	17.8	6.3	2340	**A052_6.3 S05 M05A6**	263	**A052_6.3 P63 BN63A6**	263
161	5.0	19.9	5.5	2230	**A052_5.5 S05 M05A6**	263	**A052_5.5 P63 BN63A6**	263

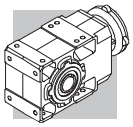

0.12 kW

n_2 min-1	M_2 Nm	S	i	R_{n2} N	IE1		IEC IE1	
0.51	2012	2.5	1715	50000			**A704_1715 P63 BN63B6**	299
0.55	1857	2.7	1583	50000			**A704_1583 P63 BN63B6**	299
0.65	1579	3.2	1346	50000			**A704_1346 P63 BN63B6**	299
0.70	1457	3.4	1242	50000			**A704_1242 P63 BN63B6**	299
1.1	913	1.6	778.2	20000			**A504_778.2 P63 BN63B6**	287
1.2	818	3.4	697.3	30000			**A604_697.3 P63 BN63B6**	295
1.4	740	2.0	631.2	20000			**A504_631.2 P63 BN63B6**	287
1.6	621	2.4	529.5	20000			**A504_529.5 P63 BN63B6**	287
1.7	588	2.5	778.2	20000			**A504_778.2 P63 BN63A4**	287
1.9	535	2.8	707.9	20000			**A504_707.9 P63 BN63A4**	287
2.1	477	3.1	631.2	20000			**A504_631.2 P63 BN63A4**	287
2.4	434	3.5	574.2	20000			**A504_574.2 P63 BN63A4**	287
3.4	310	1.2	400.8	9600	**A303_400.8 S05 M05A4**	274	**A303_400.8 P63 BN63A4**	275
3.4	304	1.5	393.2	12000	**A353_393.2 S05 M05A4**	278	**A353_393.2 P63 BN63A4**	279
3.6	291	2.9	376.8	15000	**A413_376.8 S05 M05A4**	282	**A413_376.8 P63 BN63A4**	283
3.8	275	1.3	356.3	9600	**A303_356.3 S05 M05A4**	274	**A303_356.3 P63 BN63A4**	275
4.0	262	2.0	339.3	12000	**A353_339.3 S05 M05A4**	278	**A353_339.3 P63 BN63A4**	279
4.1	255	1.0	329.4	6200	**A203_329.4 S05 M05A4**	270	**A203_329.4 P63 BN63A4**	271
4.2	251	3.4	324.2	15000	**A413_324.2 S05 M05A4**	282	**A413_324.2 P63 BN63A4**	283
4.3	243	1.6	314.5	9600	**A303_314.5 S05 M05A4**	274	**A303_314.5 P63 BN63A4**	275
4.4	236	2.5	305.4	12000	**A353_305.4 S05 M05A4**	278	**A353_305.4 P63 BN63A4**	279
4.6	226	1.1	292.8	6200	**A203_292.8 S05 M05A4**	270	**A203_292.8 P63 BN63A4**	271
5.0	210	1.8	271.5	9600	**A303_271.5 S05 M05A4**	274	**A303_271.5 P63 BN63A4**	275
5.0	209	2.9	270.7	12000	**A353_270.7 S05 M05A4**	278	**A353_270.7 P63 BN63A4**	279
5.2	201	1.2	260.5	6200	**A203_260.5 S05 M05A4**	270	**A203_260.5 P63 BN63A4**	271
5.4	192	3.1	248.1	12000	**A353_248.1 S05 M05A4**	278	**A353_248.1 P63 BN63A4**	279
5.5	189	2.0	244.3	9600	**A303_244.3 S05 M05A4**	274	**A303_244.3 P63 BN63A4**	275
6.0	172	3.5	223.2	12000	**A353_223.2 S05 M05A4**	278	**A353_223.2 P63 BN63A4**	279
6.1	171	1.5	221.3	6200	**A203_221.3 S05 M05A4**	270	**A203_221.3 P63 BN63A4**	271
6.2	167	2.2	216.6	9600	**A303_216.6 S05 M05A4**	274	**A303_216.6 P63 BN63A4**	275
6.8	154	1.6	199.2	6200	**A203_199.2 S05 M05A4**	270	**A203_199.2 P63 BN63A4**	271
6.8	153	2.3	198.5	9600	**A303_198.5 S05 M05A4**	274	**A303_198.5 P63 BN63A4**	275
7.6	138	2.5	178.5	9600	**A303_178.5 S05 M05A4**	274	**A303_178.5 P63 BN63A4**	275
7.6	138	1.8	178.3	6200	**A203_178.3 S05 M05A4**	270	**A203_178.3 P63 BN63A4**	271
8.3	126	1.9	163.4	6200	**A203_163.4 S05 M05A4**	270	**A203_163.4 P63 BN63A4**	271
8.4	125	2.7	161.4	9600	**A303_161.4 S05 M05A4**	274	**A303_161.4 P63 BN63A4**	275
9.0	116	2.8	150.7	9600	**A303_150.7 S05 M05A4**	274	**A303_150.7 P63 BN63A4**	275
9.2	113	2.0	146.1	6200	**A203_146.1 S05 M05A4**	270	**A203_146.1 P63 BN63A4**	271
9.8	106	3.0	137.4	9600	**A303_137.4 S05 M05A4**	274	**A303_137.4 P63 BN63A4**	275
10.5	100	2.2	129.1	6200	**A203_129.1 S05 M05A4**	270	**A203_129.1 P63 BN63A4**	271
11.2	93	2.3	120.5	6200	**A203_120.5 S05 M05A4**	270	**A203_120.5 P63 BN63A4**	271
11.2	93	3.2	120.5	9600	**A303_120.5 S05 M05A4**	274	**A303_120.5 P63 BN63A4**	275
12.4	84	2.4	109.2	6200	**A203_109.2 S05 M05A4**	270	**A203_109.2 P63 BN63A4**	271
14.6	74	2.7	92.3	6200	**A202_92.3 S05 M05A4**	270	**A202_92.3 P63 BN63A4**	271
14.7	73	1.4	91.6	4420	**A052_91.6 S05 M05A4**	263	**A052_91.6 P63 BN63A4**	263
14.7	73	1.8	91.6	5500	**A102_91.6 S05 M05A4**	266	**A102_91.6 P63 BN63A4**	267
16.9	64	3.3	79.9	6200	**A202_79.9 S05 M05A4**	270	**A202_79.9 P63 BN63A4**	271
17.7	61	1.6	76.4	4230	**A052_76.4 S05 M05A4**	263	**A052_76.4 P63 BN63A4**	263
17.7	61	2.5	76.4	5500	**A102_76.4 S05 M05A4**	266	**A102_76.4 P63 BN63A4**	267
20.5	53	1.9	65.9	4070	**A052_65.9 S05 M05A4**	263	**A052_65.9 P63 BN63A4**	263
20.5	53	2.8	65.9	5500	**A102_65.9 S05 M05A4**	266	**A102_65.9 P63 BN63A4**	267
23.0	47	2.1	58.6	3950	**A052_58.6 S05 M05A4**	263	**A052_58.6 P63 BN63A4**	263
23.0	47	3.2	58.6	5500	**A102_58.6 S05 M05A4**	266	**A102_58.6 P63 BN63A4**	267
26.3	41	2.4	51.3	3810	**A052_51.3 S05 M05A4**	263	**A052_51.3 P63 BN63A4**	263
29.7	36	2.8	45.4	3680	**A052_45.4 S05 M05A4**	263	**A052_45.4 P63 BN63A4**	263
33	33	3.1	40.9	3570	**A052_40.9 S05 M05A4**	263	**A052_40.9 P63 BN63A4**	263
38	28	3.6	35.1	3420	**A052_35.1 S05 M05A4**	263	**A052_35.1 P63 BN63A4**	263
42	26	3.9	32.2	3340	**A052_32.2 S05 M05A4**	263	**A052_32.2 P63 BN63A4**	263
47	23	4.4	28.6	3220	**A052_28.6 S05 M05A4**	263	**A052_28.6 P63 BN63A4**	263
53	20	4.9	25.5	3110	**A052_25.5 S05 M05A4**	263	**A052_25.5 P63 BN63A4**	263
57	19	5.3	23.8	3050	**A052_23.8 S05 M05A4**	263	**A052_23.8 P63 BN63A4**	263
62	17.3	5.8	13.9	2960	**A052_13.9 S05 M05B6**	263	**A052_13.9 P63 BN63B6**	263
63	17.1	5.9	21.4	2950	**A052_21.4 S05 M05A4**	263	**A052_21.4 P63 BN63A4**	263
73	14.8	6.7	18.6	2830	**A052_18.6 S05 M05A4**	263	**A052_18.6 P63 BN63A4**	263
82	13.1	7.6	16.4	2730	**A052_16.4 S05 M05A4**	263	**A052_16.4 P63 BN63A4**	263

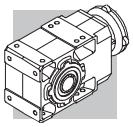

0.12 kW

n_2 min-1	M_2 Nm	S	i	R_{n2} N	IE1		IEC IE1	
90	11.9	8.4	9.6	2640	**A052_9.6 S05 M05B6**	263	**A052_9.6 P63 BN63B6**	263
97	11.1	9.0	13.9	2590	**A052_13.9 S05 M05A4**	263	**A052_13.9 P63 BN63A4**	263
110	9.8	10.2	12.3	2500	**A052_12.3 S05 M05A4**	263	**A052_12.3 P63 BN63A4**	263
121	8.9	11.2	7.2	2420	**A052_7.2 S05 M05B6**	263	**A052_7.2 P63 BN63B6**	263
128	8.4	11.9	10.6	2380	**A052_10.6 S05 M05A4**	263	**A052_10.6 P63 BN63A4**	263
140	7.7	13.0	9.6	2310	**A052_9.6 S05 M05A4**	263	**A052_9.6 P63 BN63A4**	263
159	6.8	14.7	8.5	2220	**A052_8.5 S05 M05A4**	263	**A052_8.5 P63 BN63A4**	263
187	5.8	17.4	7.2	2110	**A052_7.2 S05 M05A4**	263	**A052_7.2 P63 BN63A4**	263
213	5.1	19.8	6.3	2020	**A052_6.3 S05 M05A4**	263	**A052_6.3 P63 BN63A4**	263
247	4.4	21.8	5.5	1930	**A052_5.5 S05 M05A4**	263	**A052_5.5 P63 BN63A4**	263

0.18 kW

n_2 min-1	M_2 Nm	S	i	R_{n2} N	IE1		IEC IE1	
0.52	2917	1.7	1715	50000	**A704_1715 S1 M1SC6**	298	**A704_1715 P71 BN71A6**	299
0.58	2649	3.0	1558	65000	**A804_1558 S1 M1SC6**	301	**A804_1558 P71 BN71A6**	302
0.67	2279	3.5	1340	65000	**A804_1340 S1 M1SC6**	301	**A804_1340 P71 BN71A6**	302
0.77	1989	2.5	1715	50000			**A704_1715 P63 BN63B4**	299
0.83	1836	2.7	1583	50000			**A704_1583 P63 BN63B4**	299
0.98	1561	3.2	1346	50000			**A704_1346 P63 BN63B4**	299
1.1	1441	3.5	1242	50000			**A704_1242 P63 BN63B4**	299
1.3	1186	2.4	697.3	30000	**A604_697.3 S1 M1SC6**	294	**A604_697.3 P71 BN71A6**	295
1.5	996	2.8	585.8	30000	**A604_585.8 S1 M1SC6**	294	**A604_585.8 P71 BN71A6**	295
1.7	902	1.7	778.2	20000			**A504_778.2 P63 BN63B4**	287
1.7	876	3.2	755.4	30000			**A604_755.4 P63 BN63B4**	295
1.9	821	1.8	707.9	20000			**A504_707.9 P63 BN63B4**	287
1.9	809	3.5	697.3	30000			**A604_697.3 P63 BN63B4**	295
2.1	732	2.0	631.2	20000			**A504_631.2 P63 BN63B4**	287
2.3	666	2.3	574.2	20000			**A504_574.2 P63 BN63B4**	287
2.5	614	2.4	529.5	20000			**A504_529.5 P63 BN63B4**	287
2.7	559	2.7	481.6	20000			**A504_481.6 P63 BN63B4**	287
3.0	518	2.9	446.8	20000			**A504_446.8 P63 BN63B4**	287
3.2	471	3.2	406.4	20000			**A504_406.4 P63 BN63B4**	287
3.4	466	1.0	393.2	12000	**A353_393.2 S05 M05B4**	278	**A353_393.2 P63 BN63B4**	279
3.5	447	1.9	376.8	15000	**A413_376.8 S05 M05B4**	282	**A413_376.8 P63 BN63B4**	283
3.6	424	3.5	365.6	20000			**A504_365.6 P63 BN63B4**	287
3.7	422	0.9	356.3	9600	**A303_356.3 S05 M05B4**	274	**A303_356.3 P63 BN63B4**	275
3.9	402	1.3	339.3	12000	**A353_339.3 S05 M05B4**	278	**A353_339.3 P63 BN63B4**	279
4.1	384	2.2	324.2	15000	**A413_324.2 S05 M05B4**	282	**A413_324.2 P63 BN63B4**	283
4.2	373	1.0	314.5	9600	**A303_314.5 S05 M05B4**	274	**A303_314.5 P63 BN63B4**	275
4.3	362	1.7	305.4	12000	**A353_305.4 S05 M05B4**	278	**A353_305.4 P63 BN63B4**	279
4.5	346	2.5	291.7	15000	**A413_291.7 S05 M05B4**	282	**A413_291.7 P63 BN63B4**	283
4.9	322	1.2	271.5	9600	**A303_271.5 S05 M05B4**	274	**A303_271.5 P63 BN63B4**	275
4.9	321	1.9	270.7	12000	**A353_270.7 S05 M05B4**	278	**A353_270.7 P63 BN63B4**	279
5.0	311	2.7	262.5	15000	**A413_262.5 S05 M05B4**	282	**A413_262.5 P63 BN63B4**	283
5.3	294	2.0	248.1	12000	**A353_248.1 S05 M05B4**	278	**A353_248.1 P63 BN63B4**	279
5.4	290	1.3	244.3	9600	**A303_244.3 S05 M05B4**	274	**A303_244.3 P63 BN63B4**	275
5.5	285	3.0	240.6	15000	**A413_240.6 S05 M05B4**	282	**A413_240.6 P63 BN63B4**	283
5.9	265	2.3	223.2	12000	**A353_223.2 S05 M05B4**	278	**A353_223.2 P63 BN63B4**	279
6.0	262	1.0	221.3	6200	**A203_221.3 S05 M05B4**	270	**A203_221.3 P63 BN63B4**	271
6.1	258	3.3	217.4	15000	**A413_217.4 S05 M05B4**	282	**A413_217.4 P63 BN63B4**	283
6.1	257	1.4	216.6	9600	**A303_216.6 S05 M05B4**	274	**A303_216.6 P63 BN63B4**	275
6.5	239	2.5	201.8	12000	**A353_201.8 S05 M05B4**	278	**A353_201.8 P63 BN63B4**	279
6.6	236	1.1	199.2	6200	**A203_199.2 S05 M05B4**	270	**A203_199.2 P63 BN63B4**	271
6.6	235	1.5	198.5	9600	**A303_198.5 S05 M05B4**	274	**A303_198.5 P63 BN63B4**	275
7.0	223	2.7	188.3	12000	**A353_188.3 S05 M05B4**	278	**A353_188.3 P63 BN63B4**	279
7.4	212	1.6	178.5	9600	**A303_178.5 S05 M05B4**	274	**A303_178.5 P63 BN63B4**	275
7.4	211	1.2	178.3	6200	**A203_178.3 S05 M05B4**	270	**A203_178.3 P63 BN63B4**	271
7.7	204	2.9	171.8	12000	**A353_171.8 S05 M05B4**	278	**A353_171.8 P63 BN63B4**	279
8.1	194	1.2	163.4	6200	**A203_163.4 S05 M05B4**	270	**A203_163.4 P63 BN63B4**	271
8.2	191	1.8	161.4	9600	**A303_161.4 S05 M05B4**	274	**A303_161.4 P63 BN63B4**	275

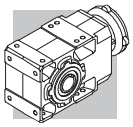

0.18 kW

n_2 min-1	M_2 Nm	S	i	R_{n2} N	IE1		IEC IE1	
8.8	179	1.8	150.7	9600	**A303_150.7 S05 M05B4**	274	**A303_150.7 P63 BN63B4**	275
8.8	179	3.4	150.6	12000	**A353_150.6 S05 M05B4**	278	**A353_150.6 P63 BN63B4**	279
9.0	173	1.3	146.1	6200	**A203_146.1 S05 M05B4**	270	**A203_146.1 P63 BN63B4**	271
9.6	163	1.9	137.4	9600	**A303_137.4 S05 M05B4**	274	**A303_137.4 P63 BN63B4**	275
10.2	153	1.4	129.1	6200	**A203_129.1 S05 M05B4**	270	**A203_129.1 P63 BN63B4**	271
11.0	143	1.5	120.5	6200	**A203_120.5 S05 M05B4**	270	**A203_120.5 P63 BN63B4**	271
11.0	143	2.1	120.5	9600	**A303_120.5 S05 M05B4**	274	**A303_120.5 P63 BN63B4**	275
12.1	129	1.6	109.2	6200	**A203_109.2 S05 M05B4**	270	**A203_109.2 P63 BN63B4**	271
12.1	129	2.3	109.1	9600	**A303_109.1 S05 M05B4**	274	**A303_109.1 P63 BN63B4**	275
13.5	119	2.5	97.5	9600			**A302_97.5 P63 BN63B4**	275
14.3	113	1.8	92.3	6200	**A202_92.3 S05 M05B4**	270	**A202_92.3 P63 BN63B4**	271
14.4	112	0.9	91.6	4120	**A052_91.6 S05 M05B4**	263	**A052_91.6 P63 BN63B4**	263
14.4	112	1.2	91.6	5500	**A102_91.6 S05 M05B4**	266	**A102_91.6 P63 BN63B4**	267
15.2	106	3.0	86.7	9600			**A302_86.7 P63 BN63B4**	275
16.5	98	2.1	79.9	6200	**A202_79.9 S05 M05B4**	270	**A202_79.9 P63 BN63B4**	271
17.3	94	1.1	76.4	3980	**A052_76.4 S05 M05B4**	263	**A052_76.4 P63 BN63B4**	263
17.3	94	1.6	76.4	5500	**A102_76.4 S05 M05B4**	266	**A102_76.4 P63 BN63B4**	267
18.6	87	2.4	71.0	6200	**A202_71.0 S05 M05B4**	270	**A202_71.0 P63 BN63B4**	271
20.0	81	1.2	65.9	3860	**A052_65.9 S05 M05B4**	263	**A052_65.9 P63 BN63B4**	263
20.0	81	1.9	65.9	5500	**A102_65.9 S05 M05B4**	266	**A102_65.9 P63 BN63B4**	267
20.9	77	3.2	63.1	6200	**A202_63.1 S05 M05B4**	270	**A202_63.1 P63 BN63B4**	271
22.5	72	1.4	58.6	3760	**A052_58.6 S05 M05B4**	263	**A052_58.6 P63 BN63B4**	263
22.5	72	2.1	58.6	5500	**A102_58.6 S05 M05B4**	266	**A102_58.6 P63 BN63B4**	267
25.8	63	1.6	51.3	3640	**A052_51.3 S05 M05B4**	263	**A052_51.3 P63 BN63B4**	263
25.8	63	2.4	51.3	5500	**A102_51.3 S05 M05B4**	266	**A102_51.3 P63 BN63B4**	267
29.1	56	1.8	45.4	3540	**A052_45.4 S05 M05B4**	263	**A052_45.4 P63 BN63B4**	263
29.1	56	2.7	45.4	5500	**A102_45.4 S05 M05B4**	266	**A102_45.4 P63 BN63B4**	267
32	50	2.0	40.9	3440	**A052_40.9 S05 M05B4**	263	**A052_40.9 P63 BN63B4**	263
32	50	3.0	40.9	5500	**A102_40.9 S05 M05B4**	266	**A102_40.9 P63 BN63B4**	267
38	43	2.3	35.1	3310	**A052_35.1 S05 M05B4**	263	**A052_35.1 P63 BN63B4**	263
38	43	3.5	35.1	5380	**A102_35.1 S05 M05B4**	266	**A102_35.1 P63 BN63B4**	267
41	39	2.5	32.2	3240	**A052_32.2 S05 M05B4**	263	**A052_32.2 P63 BN63B4**	263
46	35	2.9	28.6	3130	**A052_28.6 S05 M05B4**	263	**A052_28.6 P63 BN63B4**	263
52	31	3.2	25.5	3040	**A052_25.5 S05 M05B4**	263	**A052_25.5 P63 BN63B4**	263
56	29	3.4	23.8	2980	**A052_23.8 S05 M05B4**	263	**A052_23.8 P63 BN63B4**	263
62	26	3.8	21.4	2890	**A052_21.4 S05 M05B4**	263	**A052_21.4 P63 BN63B4**	263
71	23	4.4	18.6	2780	**A052_18.6 S05 M05B4**	263	**A052_18.6 P63 BN63B4**	263
80	20	5.0	16.4	2680	**A052_16.4 S05 M05B4**	263	**A052_16.4 P63 BN63B4**	263
95	17.1	5.9	13.9	2550	**A052_13.9 S05 M05B4**	263	**A052_13.9 P63 BN63B4**	263
107	15.1	6.6	12.3	2460	**A052_12.3 S05 M05B4**	263	**A052_12.3 P63 BN63B4**	263
125	12.9	7.7	10.6	2350	**A052_10.6 S05 M05B4**	263	**A052_10.6 P63 BN63B4**	263
137	11.8	8.5	9.6	2280	**A052_9.6 S05 M05B4**	263	**A052_9.6 P63 BN63B4**	263
142	11.4	8.8	6.3	2300	**A052_6.3 S1 M1SC6**	263	**A052_6.3 P71 BN71A6**	263
155	10.4	9.6	8.5	2200	**A052_8.5 S05 M05B4**	263	**A052_8.5 P63 BN63B4**	263
183	8.8	11.3	7.2	2090	**A052_7.2 S05 M05B4**	263	**A052_7.2 P63 BN63B4**	263
208	7.8	12.9	6.3	2010	**A052_6.3 S05 M05B4**	263	**A052_6.3 P63 BN63B4**	263
242	6.7	14.2	5.5	1920	**A052_5.5 S05 M05B4**	263	**A052_5.5 P63 BN63B4**	263
284	5.7	16.7	9.6	1830	**A052_9.6 S05 M05A2**	263	**A052_9.6 P63 BN63A2**	263
321	5.0	17.8	8.5	1770	**A052_8.5 S05 M05A2**	263	**A052_8.5 P63 BN63A2**	263
379	4.3	19.9	7.2	1670	**A052_7.2 S05 M05A2**	263	**A052_7.2 P63 BN63A2**	263
431	3.8	21.3	6.3	1610	**A052_6.3 S05 M05A2**	263	**A052_6.3 P63 BN63A2**	263
499	3.2	23.2	5.5	1530	**A052_5.5 S05 M05A2**	263	**A052_5.5 P63 BN63A2**	263

0.25 kW

n_2 min-1	M_2 Nm	S	i	R_{n2} N	IE1		IEC IE1	
0.52	4051	1.2	1715	50000	**A704_1715 S1 M1SD6**	298	**A704_1715 P71 BN71B6**	299
0.58	3680	2.2	1558	65000	**A804_1558 S1 M1SD6**	301	**A804_1558 P71 BN71B6**	302
0.67	3165	2.5	1340	65000	**A804_1340 S1 M1SD6**	301	**A804_1340 P71 BN71B6**	302
0.80	2642	1.9	1715	50000			**A704_1715 P71 BN71A4**	299

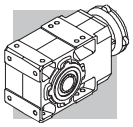

0.25 kW

n_2 min-1	M_2 Nm	S	i	R_{n2} N	IE1		IEC IE1	
0.87	2439	2.1	1583	50000			**A704_1583 P71 BN71A4**	299
0.89	2400	3.3	1558	65000			**A804_1558 P71 BN71A4**	302
1.0	2073	2.4	1346	50000			**A704_1346 P71 BN71A4**	299
1.1	1914	2.6	1242	50000			**A704_1242 P71 BN71A4**	299
1.2	1789	2.8	1161	50000			**A704_1161 P71 BN71A4**	299
1.3	1652	3.0	1072	50000			**A704_1072 P71 BN71A4**	299
1.5	1427	3.5	926.5	50000			**A704_926.5 P71 BN71A4**	299
1.8	1199	1.3	778.2	20000			**A504_778.2 P71 BN71A4**	287
1.8	1164	2.4	755.4	30000			**A604_755.4 P71 BN71A4**	295
1.9	1091	1.4	707.9	20000			**A504_707.9 P71 BN71A4**	287
2.0	1074	2.6	697.3	30000			**A604_697.3 P71 BN71A4**	295
2.2	978	2.9	634.6	30000			**A604_634.6 P71 BN71A4**	295
2.2	972	1.5	631.2	20000			**A504_631.2 P71 BN71A4**	287
2.4	902	3.1	585.8	30000			**A604_585.8 P71 BN71A4**	295
2.4	885	1.7	574.2	20000			**A504_574.2 P71 BN71A4**	287
2.5	835	3.4	542.0	30000			**A604_542.0 P71 BN71A4**	295
2.6	816	1.8	529.5	20000			**A504_529.5 P71 BN71A4**	287
2.9	742	2.0	481.6	20000			**A504_481.6 P71 BN71A4**	287
3.1	688	2.2	446.8	20000			**A504_446.8 P71 BN71A4**	287
3.4	626	2.4	406.4	20000			**A504_406.4 P71 BN71A4**	287
3.6	611	1.4	376.8	15000	**A413_376.8 S05 M05C4**	282	**A413_376.8 P71 BN71A4**	283
3.8	563	2.7	365.6	20000			**A504_365.6 P71 BN71A4**	287
3.9	550	0.9	339.3	12000	**A353_339.3 S05 M05C4**	278	**A353_339.3 P71 BN71A4**	279
4.1	526	1.6	324.2	15000	**A413_324.2 S05 M05C4**	282	**A413_324.2 P71 BN71A4**	283
4.1	512	2.9	332.6	20000			**A504_332.6 P71 BN71A4**	287
4.4	495	1.2	305.4	12000	**A353_305.4 S05 M05C4**	278	**A353_305.4 P71 BN71A4**	279
4.7	460	1.8	291.7	15000	**A413_291.7 S05 M05C4**	282	**A413_291.7 P71 BN71A4**	283
4.8	442	3.4	286.8	20000			**A504_286.8 P71 BN71A4**	287
4.9	440	0.9	271.5	9600	**A303_271.5 S05 M05C4**	274	**A303_271.5 P71 BN71A4**	275
5.0	439	1.4	270.7	12000	**A353_270.7 S05 M05C4**	278	**A353_270.7 P71 BN71A4**	279
5.1	426	2.0	262.5	15000	**A413_262.5 S05 M05C4**	282	**A413_262.5 P71 BN71A4**	283
5.4	403	1.5	248.1	12000	**A353_248.1 S05 M05C4**	278	**A353_248.1 P71 BN71A4**	279
5.6	385	1.0	244.3	9600	**A303_244.3 S05 M05C4**	274	**A303_244.3 P71 BN71A4**	275
5.7	379	2.2	240.6	15000	**A413_240.6 S05 M05C4**	282	**A413_240.6 P71 BN71A4**	283
6.0	362	1.7	223.2	12000	**A353_223.2 S05 M05C4**	278	**A353_223.2 P71 BN71A4**	279
6.2	353	2.4	217.4	15000	**A413_217.4 S05 M05C4**	282	**A413_217.4 P71 BN71A4**	283
6.2	351	1.0	216.6	9600	**A303_216.6 S05 M05C4**	274	**A303_216.6 P71 BN71A4**	275
6.6	327	1.8	201.8	12000	**A353_201.8 S05 M05C4**	278	**A353_201.8 P71 BN71A4**	279
7.0	313	1.1	198.5	9600	**A303_198.5 S05 M05C4**	274	**A303_198.5 P71 BN71A4**	275
7.0	311	2.7	197.5	15000	**A413_197.5 S05 M05C4**	282	**A413_197.5 P71 BN71A4**	283
7.1	306	2.0	188.3	12000	**A353_188.3 S05 M05C4**	278	**A353_188.3 P71 BN71A4**	279
7.3	299	2.8	184.4	15000	**A413_184.4 S05 M05C4**	282	**A413_184.4 P71 BN71A4**	283
7.5	290	1.2	178.5	9600	**A303_178.5 S05 M05C4**	274	**A303_178.5 P71 BN71A4**	275
7.8	279	2.2	171.8	12000	**A353_171.8 S05 M05C4**	278	**A353_171.8 P71 BN71A4**	279
8.4	257	0.9	163.4	6200	**A203_163.4 S05 M05C4**	270	**A203_163.4 P71 BN71A4**	271
8.5	254	1.3	161.4	9600	**A303_161.4 S05 M05C4**	274	**A303_161.4 P71 BN71A4**	275
8.9	244	1.4	150.7	9600	**A303_150.7 S05 M05C4**	274	**A303_150.7 P71 BN71A4**	275
8.9	244	2.5	150.6	12000	**A353_150.6 S05 M05C4**	278	**A353_150.6 P71 BN71A4**	279
9.2	237	1.0	146.1	6200	**A203_146.1 S05 M05C4**	270	**A203_146.1 P71 BN71A4**	271
9.8	221	2.6	136.3	12000	**A353_136.3 S05 M05C4**	278	**A353_136.3 P71 BN71A4**	279
10.0	216	1.5	137.4	9600	**A303_137.4 S05 M05C4**	274	**A303_137.4 P71 BN71A4**	275
10.7	203	1.1	129.1	6200	**A203_129.1 S05 M05C4**	270	**A203_129.1 P71 BN71A4**	271
11.1	196	1.1	120.5	6200	**A203_120.5 S05 M05C4**	270	**A203_120.5 P71 BN71A4**	271
11.1	195	1.5	120.5	9600	**A303_120.5 S05 M05C4**	274	**A303_120.5 P71 BN71A4**	275
11.5	190	3.0	116.9	12000	**A353_116.9 S05 M05C4**	278	**A353_116.9 P71 BN71A4**	279
12.6	172	1.2	109.2	6200	**A203_109.2 S05 M05C4**	270	**A203_109.2 P71 BN71A4**	271
12.7	172	1.7	109.1	9600	**A303_109.1 S05 M05C4**	274	**A303_109.1 P71 BN71A4**	275
12.7	171	3.1	105.5	12000	**A353_105.5 S05 M05C4**	278	**A353_105.5 P71 BN71A4**	279
14.2	159	1.9	97.5	9600			**A302_97.5 P71 BN71A4**	275
14.4	156	3.5	95.6	12000			**A352_95.6 P71 BN71A4**	279
14.5	155	1.3	92.3	6200	**A202_92.3 S05 M05C4**	270	**A202_92.3 P71 BN71A4**	271
15.9	141	2.3	86.7	9600			**A302_86.7 P71 BN71A4**	275
16.8	134	1.6	79.9	6200	**A202_79.9 S05 M05C4**	270	**A202_79.9 P71 BN71A4**	271
17.5	128	1.2	76.4	5500	**A102_76.4 S05 M05C4**	266	**A102_76.4 P71 BN71A4**	267
18.0	125	2.8	76.5	9600			**A302_76.5 P71 BN71A4**	275

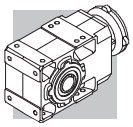

0.25 kW

n_2 min-1	M_2 Nm	S	i	R_{n2} N	IE1		IEC IE1	
19.4	116	1.8	71.0	6200	**A202_71.0 S05 M05C4**	270	**A202_71.0 P71 BN71A4**	271
20.3	110	0.9	65.9	3610	**A052_65.9 S05 M05C4**	263	**A052_65.9 P71 BN71A4**	263
20.3	110	1.4	65.9	5500	**A102_65.9 S05 M05C4**	266	**A102_65.9 P71 BN71A4**	267
21.2	106	2.3	63.1	6200	**A202_63.1 S05 M05C4**	270	**A202_63.1 P71 BN71A4**	271
22.9	98	1.0	58.6	3540	**A052_58.6 S05 M05C4**	263	**A052_58.6 P71 BN71A4**	263
23.5	95	1.6	58.6	5500	**A102_58.6 S05 M05C4**	266	**A102_58.6 P71 BN71A4**	267
25.0	90	2.8	53.7	6200	**A202_53.7 S05 M05C4**	270	**A202_53.7 P71 BN71A4**	271
26.1	86	1.2	51.3	3450	**A052_51.3 S05 M05C4**	263	**A052_51.3 P71 BN71A4**	263
26.1	86	1.7	51.3	5500	**A102_51.3 S05 M05C4**	266	**A102_51.3 P71 BN71A4**	267
28.6	79	3.2	48.3	6180	**A202_48.3 S05 M05C4**	270	**A202_48.3 P71 BN71A4**	271
29.5	76	1.3	45.4	3370	**A052_45.4 S05 M05C4**	263	**A052_45.4 P71 BN71A4**	263
29.5	76	2.0	45.4	5500	**A102_45.4 S05 M05C4**	266	**A102_45.4 P71 BN71A4**	267
33	68	1.5	40.9	3290	**A052_40.9 S05 M05C4**	263	**A052_40.9 P71 BN71A4**	263
34	66	2.3	40.9	5500	**A102_40.9 S05 M05C4**	266	**A102_40.9 P71 BN71A4**	267
38	59	1.7	35.1	3180	**A052_35.1 S05 M05C4**	263	**A052_35.1 P71 BN71A4**	263
38	59	2.5	35.1	5260	**A102_35.1 S05 M05C4**	266	**A102_35.1 P71 BN71A4**	267
42	54	1.9	32.2	3120	**A052_32.2 S05 M05C4**	263	**A052_32.2 P71 BN71A4**	263
43	52	2.9	32.2	5500	**A102_32.2 S05 M05C4**	266	**A102_32.2 P71 BN71A4**	267
47	48	2.1	28.6	3030	**A052_28.6 S05 M05C4**	263	**A052_28.6 P71 BN71A4**	263
47	48	3.1	28.6	4970	**A102_28.6 S05 M05C4**	266	**A102_28.6 P71 BN71A4**	267
53	43	2.3	25.5	2940	**A052_25.5 S05 M05C4**	263	**A052_25.5 P71 BN71A4**	263
56	40	2.5	23.8	2890	**A052_23.8 S05 M05C4**	263	**A052_23.8 P71 BN71A4**	263
63	36	2.8	21.4	2810	**A052_21.4 S05 M05C4**	263	**A052_21.4 P71 BN71A4**	263
72	31	3.2	18.6	2710	**A052_18.6 S05 M05C4**	263	**A052_18.6 P71 BN71A4**	263
84	27	3.7	16.4	2620	**A052_16.4 S05 M05C4**	263	**A052_16.4 P71 BN71A4**	263
99	23	4.4	13.9	2500	**A052_13.9 S05 M05C4**	263	**A052_13.9 P71 BN71A4**	263
112	20	5.0	12.3	2420	**A052_12.3 S05 M05C4**	263	**A052_12.3 P71 BN71A4**	263
131	17.2	5.8	10.6	2310	**A052_10.6 S05 M05C4**	263	**A052_10.6 P71 BN71A4**	263
144	15.7	6.4	9.6	2260	**A052_9.6 S05 M05C4**	263	**A052_9.6 P71 BN71A4**	263
162	13.9	7.2	8.5	2180	**A052_8.5 S05 M05C4**	263	**A052_8.5 P71 BN71A4**	263
191	11.7	8.5	7.2	2070	**A052_7.2 S05 M05C4**	263	**A052_7.2 P71 BN71A4**	263
218	10.3	9.7	6.3	1990	**A052_6.3 S05 M05C4**	263	**A052_6.3 P71 BN71A4**	263
252	8.9	10.7	5.5	1900	**A052_5.5 S05 M05C4**	263	**A052_5.5 P71 BN71A4**	263
285	7.9	12.1	9.6	1820	**A052_9.6 S05 M05B2**	263	**A052_9.6 P63 BN63B2**	263
322	7.0	12.9	8.5	1750	**A052_8.5 S05 M05B2**	263	**A052_8.5 P63 BN63B2**	263
380	5.9	14.4	7.2	1660	**A052_7.2 S05 M05B2**	263	**A052_7.2 P63 BN63B2**	263
433	5.2	15.4	6.3	1590	**A052_6.3 S05 M05B2**	263	**A052_6.3 P63 BN63B2**	263
501	4.5	16.7	5.5	1520	**A052_5.5 S05 M05B2**	263	**A052_5.5 P63 BN63B2**	263

0.37 kW

n_2 min-1	M_2 Nm	S	i	R_{n2} N	IE1		IEC IE1	
0.56	5644	2.5	1632	75000	**A904_1632 S1 M1LA6**	304	**A904_1632 P80 BN80A6**	305
0.63	4972	1.6	1438	65000	**A804_1438 S1 M1LA6**	301	**A804_1438 P80 BN80A6**	302
0.74	4226	3.3	1222	75000	**A904_1222 S1 M1LA6**	304	**A904_1222 P80 BN80A6**	305
0.80	3939	1.3	1715	50000	**A704_1715 S1 M1SD4**	298	**A704_1715 P71 BN71B4**	299
0.87	3636	1.4	1583	50000	**A704_1583 S1 M1SD4**	298	**A704_1583 P71 BN71B4**	299
0.88	3577	2.2	1558	65000	**A804_1558 S1 M1SD4**	301	**A804_1558 P71 BN71B4**	302
0.95	3302	2.4	1438	65000	**A804_1438 S1 M1SD4**	301	**A804_1438 P71 BN71B4**	302
1.0	3091	1.6	1346	50000	**A704_1346 S1 M1SD4**	298	**A704_1346 P71 BN71B4**	299
1.0	3077	2.6	1340	65000	**A804_1340 S1 M1SD4**	301	**A804_1340 P71 BN71B4**	302
1.1	2853	1.8	1242	50000	**A704_1242 S1 M1SD4**	298	**A704_1242 P71 BN71B4**	299
1.1	2841	2.8	1237	65000	**A804_1237 S1 M1SD4**	301	**A804_1237 P71 BN71B4**	302
1.2	2668	1.9	1161	50000	**A704_1161 S1 M1SD4**	298	**A704_1161 P71 BN71B4**	299
1.3	2492	3.2	1085	65000	**A804_1085 S1 M1SD4**	301	**A804_1085 P71 BN71B4**	302
1.3	2462	2.0	1072	50000	**A704_1072 S1 M1SD4**	298	**A704_1072 P71 BN71B4**	299
1.4	2300	3.5	1001	65000	**A804_1001 S1 M1SD4**	301	**A804_1001 P71 BN71B4**	302
1.5	2128	2.3	926.5	50000	**A704_926.5 S1 M1SD4**	298	**A704_926.5 P71 BN71B4**	299
1.6	1964	2.5	855.3	50000	**A704_855.3 S1 M1SD4**	298	**A704_855.3 P71 BN71B4**	299

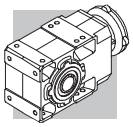

0.37 kW

n_2 min-1	M_2 Nm	S	i	R_{n2} N	IE1		IEC IE1	
1.8	1754	2.8	763.9	50000	**A704_763.9 S1 M1SD4**	298	**A704_763.9 P71 BN71B4**	299
1.8	1735	1.6	755.4	30000	**A604_755.4 S1 M1SD4**	294	**A604_755.4 P71 BN71B4**	295
1.9	1626	0.9	707.9	20000	**A504_707.9 S1 M1SD4**	286	**A504_707.9 P71 BN71B4**	287
1.9	1619	3.1	705.1	50000	**A704_705.1 S1 M1SD4**	298	**A704_705.1 P71 BN71B4**	299
2.0	1601	1.7	697.3	30000	**A604_697.3 S1 M1SD4**	294	**A604_697.3 P71 BN71B4**	295
2.1	1481	3.4	644.6	50000	**A704_644.6 S1 M1SD4**	298	**A704_644.6 P71 BN71B4**	299
2.2	1457	1.9	634.6	30000	**A604_634.6 S1 M1SD4**	294	**A604_634.6 P71 BN71B4**	295
2.2	1450	1.0	631.2	20000	**A504_631.2 S1 M1SD4**	286	**A504_631.2 P71 BN71B4**	287
2.3	1345	2.1	585.8	30000	**A604_585.8 S1 M1SD4**	294	**A604_585.8 P71 BN71B4**	295
2.4	1319	1.1	574.2	20000	**A504_574.2 S1 M1SD4**	286	**A504_574.2 P71 BN71B4**	287
2.5	1245	2.2	542.0	30000	**A604_542.0 S1 M1SD4**	294	**A604_542.0 P71 BN71B4**	295
2.6	1216	1.2	529.5	20000	**A504_529.5 S1 M1SD4**	286	**A504_529.5 P71 BN71B4**	287
2.7	1149	2.4	500.3	30000	**A604_500.3 S1 M1SD4**	294	**A604_500.3 P71 BN71B4**	295
2.8	1106	1.4	481.6	20000	**A504_481.6 S1 M1SD4**	286	**A504_481.6 P71 BN71B4**	287
3.1	1026	1.5	446.8	20000	**A504_446.8 S1 M1SD4**	286	**A504_446.8 P71 BN71B4**	287
3.1	1007	2.8	438.4	30000	**A604_438.4 S1 M1SD4**	294	**A604_438.4 P71 BN71B4**	295
3.4	933	1.6	406.4	20000	**A504_406.4 S1 M1SD4**	286	**A504_406.4 P71 BN71B4**	287
3.4	929	3.0	404.7	30000	**A604_404.7 S1 M1SD4**	294	**A604_404.7 P71 BN71B4**	295
3.6	885	1.0	376.8	15000	**A413_376.8 S1 M1SD4**	282	**A413_376.8 P71 BN71B4**	283
3.7	840	1.8	365.6	20000	**A504_365.6 S1 M1SD4**	286	**A504_365.6 P71 BN71B4**	287
3.9	807	3.5	351.2	30000	**A604_351.2 S1 M1SD4**	294	**A604_351.2 P71 BN71B4**	295
4.1	764	2.0	332.6	20000	**A504_332.6 S1 M1SD4**	286	**A504_332.6 P71 BN71B4**	287
4.2	761	1.1	324.2	15000	**A413_324.2 S1 M1SD4**	282	**A413_324.2 P71 BN71B4**	283
4.7	685	1.2	291.7	15000	**A413_291.7 S1 M1SD4**	282	**A413_291.7 P71 BN71B4**	283
4.8	659	2.3	286.8	20000	**A504_286.8 S1 M1SD4**	286	**A504_286.8 P71 BN71B4**	287
5.1	636	0.9	270.7	12000	**A353_270.7 S1 M1SD4**	278	**A353_270.7 P71 BN71B4**	279
5.2	616	1.4	262.5	15000	**A413_262.5 S1 M1SD4**	282	**A413_262.5 P71 BN71B4**	283
5.3	599	2.5	260.9	20000	**A504_260.9 S1 M1SD4**	286	**A504_260.9 P71 BN71B4**	287
5.5	583	1.0	248.1	12000	**A353_248.1 S1 M1SD4**	278	**A353_248.1 P71 BN71B4**	279
5.7	565	1.5	240.6	15000	**A413_240.6 S1 M1SD4**	282	**A413_240.6 P71 BN71B4**	283
5.9	533	2.8	232.0	20000	**A504_232.0 S1 M1SD4**	286	**A504_232.0 P71 BN71B4**	287
6.1	524	1.1	223.2	12000	**A353_223.2 S1 M1SD4**	278	**A353_223.2 P71 BN71B4**	279
6.3	511	1.7	217.4	15000	**A413_217.4 S1 M1SD4**	282	**A413_217.4 P71 BN71B4**	283
6.5	485	3.1	211.0	20000	**A504_211.0 S1 M1SD4**	286	**A504_211.0 P71 BN71B4**	287
6.8	474	1.3	201.8	12000	**A353_201.8 S1 M1SD4**	278	**A353_201.8 P71 BN71B4**	279
6.9	464	1.8	197.5	15000	**A413_197.5 S1 M1SD4**	282	**A413_197.5 P71 BN71B4**	283
7.2	448	3.4	190.6	20000	**A503_190.6 S1 M1SD4**	286	**A503_190.6 P71 BN71B4**	287
7.3	442	1.4	188.3	12000	**A353_188.3 S1 M1SD4**	278	**A353_188.3 P71 BN71B4**	279
7.4	433	2.0	184.4	15000	**A413_184.4 S1 M1SD4**	282	**A413_184.4 P71 BN71B4**	283
8.0	403	1.5	171.8	12000	**A353_171.8 S1 M1SD4**	278	**A353_171.8 P71 BN71B4**	279
9.1	354	0.9	150.7	9600	**A303_150.7 S1 M1SD4**	274	**A303_150.7 P71 BN71B4**	275
9.1	354	1.7	150.6	12000	**A353_150.6 S1 M1SD4**	278	**A353_150.6 P71 BN71B4**	279
9.3	345	2.5	146.9	15000	**A413_146.9 S1 M1SD4**	282	**A413_146.9 P71 BN71B4**	283
10.0	323	1.0	137.4	9600	**A303_137.4 S1 M1SD4**	274	**A303_137.4 P71 BN71B4**	275
10.0	320	1.8	136.3	12000	**A353_136.3 S1 M1SD4**	278	**A353_136.3 P71 BN71B4**	279
11.4	283	1.1	120.5	9600	**A303_120.5 S1 M1SD4**	274	**A303_120.5 P71 BN71B4**	275
11.7	275	2.0	116.9	12000	**A353_116.9 S1 M1SD4**	278	**A353_116.9 P71 BN71B4**	279
11.8	272	3.1	115.9	15000	**A413_115.9 S1 M1SD4**	282	**A413_115.9 P71 BN71B4**	283
12.6	256	1.2	109.1	9600	**A303_109.1 S1 M1SD4**	274	**A303_109.1 P71 BN71B4**	275
13.0	248	2.1	105.5	12000	**A353_105.5 S1 M1SD4**	278	**A353_105.5 P71 BN71B4**	279
14.1	237	1.3	97.5	9600			**A302_97.5 P71 BN71B4**	275
14.3	232	2.3	95.6	12000	**A352_95.6 S1 M1SD4**	278	**A352_95.6 P71 BN71B4**	279
15.8	210	1.5	86.7	9600			**A302_86.7 P71 BN71B4**	275
16.6	200	3.0	82.5	12000	**A352_82.5 S1 M1SD4**	278	**A352_82.5 P71 BN71B4**	279
17.2	194	1.1	79.9	6200			**A202_79.9 P71 BN71B4**	271
17.9	186	1.9	76.5	9600	**A302_76.5 S1 M1SD4**	274	**A302_76.5 P71 BN71B4**	275
18.4	180	3.3	74.3	12000	**A352_74.3 S1 M1SD4**	278	**A352_74.3 P71 BN71B4**	279
19.3	172	1.2	71.0	6200			**A202_71.0 P71 BN71B4**	271
20.7	160	2.4	66.0	9350	**A302_66.0 S1 M1SD4**	274	**A302_66.0 P71 BN71B4**	275
20.8	160	0.9	65.9	5500			**A102_65.9 P71 BN71B4**	267
21.7	153	1.6	63.1	6200	**A202_63.1 S1 M1SD4**	270	**A202_63.1 P71 BN71B4**	271
23.1	144	2.8	59.4	9080	**A302_59.4 S1 M1SD4**	274	**A302_59.4 P71 BN71B4**	275
23.4	142	1.1	58.6	5500			**A102_58.6 P71 BN71B4**	267
25.5	130	1.9	53.7	6090	**A202_53.7 S1 M1SD4**	270	**A202_53.7 P71 BN71B4**	271
26.0	128	3.2	52.7	8790	**A302_52.7 S1 M1SD4**	274	**A302_52.7 P71 BN71B4**	275

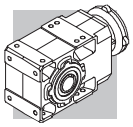

0.37 kW

n_2 min^{-1}	M_2 Nm	S	i	R_{n2} N	IE1		IEC IE1	
26.7	124	1.2	51.3	5490	**A102_51.3 S1 M1SD4**	266	**A102_51.3 P71 BN71B4**	267
28.4	117	2.1	48.3	5940	**A202_48.3 S1 M1SD4**	270	**A202_48.3 P71 BN71B4**	271
28.4	117	3.5	48.3	8580	**A302_48.3 S1 M1SD4**	274	**A302_48.3 P71 BN71B4**	275
30	110	0.9	45.4	3060	**A052_45.4 S1 M1SD4**	263	**A052_45.4 P71 BN71B4**	263
30	110	1.4	45.4	5350	**A102_45.4 S1 M1SD4**	266	**A102_45.4 P71 BN71B4**	267
32	105	2.4	43.2	5780	**A202_43.2 S1 M1SD4**	270	**A202_43.2 P71 BN71B4**	271
34	99	1.0	40.9	3020	**A052_40.9 S1 M1SD4**	263	**A052_40.9 P71 BN71B4**	263
34	99	1.5	40.9	5500	**A102_40.9 S1 M1SD4**	266	**A102_40.9 P71 BN71B4**	267
35	96	2.6	39.6	5650	**A202_39.6 S1 M1SD4**	270	**A202_39.6 P71 BN71B4**	271
39	86	2.9	35.4	5480	**A202_35.4 S1 M1SD4**	270	**A202_35.4 P71 BN71B4**	271
39	85	1.2	35.1	2950	**A052_35.1 S1 M1SD4**	263	**A052_35.1 P71 BN71B4**	263
39	85	1.8	35.1	5040	**A102_35.1 S1 M1SD4**	266	**A102_35.1 P71 BN71B4**	267
43	78	1.3	32.2	2900	**A052_32.2 S1 M1SD4**	263	**A052_32.2 P71 BN71B4**	263
43	78	1.9	32.2	5500	**A102_32.2 S1 M1SD4**	266	**A102_32.2 P71 BN71B4**	267
44	76	3.3	31.3	5310	**A202_31.3 S1 M1SD4**	270	**A202_31.3 P71 BN71B4**	271
47	71	3.5	29.2	5210	**A202_29.2 S1 M1SD4**	270	**A202_29.2 P71 BN71B4**	271
48	69	1.4	28.6	2840	**A052_28.6 S1 M1SD4**	263	**A052_28.6 P71 BN71B4**	263
48	69	2.2	28.6	4790	**A102_28.6 S1 M1SD4**	266	**A102_28.6 P71 BN71B4**	267
54	62	1.6	25.5	2770	**A052_25.5 S1 M1SD4**	263	**A052_25.5 P71 BN71B4**	263
54	62	2.4	25.5	5500	**A102_25.5 S1 M1SD4**	266	**A102_25.5 P71 BN71B4**	267
58	58	1.7	23.8	2730	**A052_23.8 S1 M1SD4**	263	**A052_23.8 P71 BN71B4**	263
58	58	2.6	23.8	4570	**A102_23.8 S1 M1SD4**	266	**A102_23.8 P71 BN71B4**	267
64	52	1.9	21.4	2670	**A052_21.4 S1 M1SD4**	263	**A052_21.4 P71 BN71B4**	263
64	52	2.9	21.4	5270	**A102_21.4 S1 M1SD4**	266	**A102_21.4 P71 BN71B4**	267
74	45	2.2	18.6	2590	**A052_18.6 S1 M1SD4**	263	**A052_18.6 P71 BN71B4**	263
74	45	3.3	18.6	4270	**A102_18.6 S1 M1SD4**	266	**A102_18.6 P71 BN71B4**	267
83	40	2.5	16.4	2510	**A052_16.4 S1 M1SD4**	263	**A052_16.4 P71 BN71B4**	263
98	34	3.0	13.9	2410	**A052_13.9 S1 M1SD4**	263	**A052_13.9 P71 BN71B4**	263
111	30	3.3	12.3	2350	**A052_12.3 S1 M1SD4**	263	**A052_12.3 P71 BN71B4**	263
130	26	3.9	10.6	2240	**A052_10.6 S1 M1SD4**	263	**A052_10.6 P71 BN71B4**	263
142	23	4.3	9.6	2190	**A052_9.6 S1 M1SD4**	263	**A052_9.6 P71 BN71B4**	263
161	21	4.8	8.5	2120	**A052_8.5 S1 M1SD4**	263	**A052_8.5 P71 BN71B4**	263
190	17.5	5.7	7.2	2030	**A052_7.2 S1 M1SD4**	263	**A052_7.2 P71 BN71B4**	263
216	15.4	6.5	6.3	1950	**A052_6.3 S1 M1SD4**	263	**A052_6.3 P71 BN71B4**	263
228	14.6	6.8	12.3	1920	**A052_12.3 S05 M05C2**	263	**A052_12.3 P71 BN71A2**	263
251	13.3	7.2	5.5	1870	**A052_5.5 S1 M1SD4**	263	**A052_5.5 P71 BN71B4**	263
265	12.5	6.4	10.6	1830	**A052_10.6 S05 M05C2**	263	**A052_10.6 P71 BN71A2**	263
291	11.4	8.3	9.6	1790	**A052_9.6 S05 M05C2**	263	**A052_9.6 P71 BN71A2**	263
331	10.0	9.0	8.5	1720	**A052_8.5 S05 M05C2**	263	**A052_8.5 P71 BN71A2**	263
388	8.6	9.9	7.2	1640	**A052_7.2 S05 M05C2**	263	**A052_7.2 P71 BN71A2**	263
445	7.5	10.7	6.3	1570	**A052_6.3 S05 M05C2**	263	**A052_6.3 P71 BN71A2**	263
512	6.5	11.6	5.5	1500	**A052_5.5 S05 M05C2**	263		

0.55 kW

n_2 min^{-1}	M_2 Nm	S	i	R_{n2} N	IE1		IEC IE1	
0.56	8299	1.7	1632	75000	**A904_1632 S2 M2SA6**	304	**A904_1632 P80 BN80B6**	305
0.64	7310	1.1	1438	65000	**A804_1438 S2 M2SA6**	301	**A804_1438 P80 BN80B6**	302
0.75	6213	2.3	1222	75000	**A904_1222 S2 M2SA6**	304	**A904_1222 P80 BN80B6**	305
0.80	5813	0.9	1715	50000	**A704_1715 S1 M1LA4**	298	**A704_1715 P80 BN80A4**	299
0.85	5532	2.5	1632	75000	**A904_1632 S1 M1LA4**	304	**A904_1632 P80 BN80A4**	305
0.87	5365	0.9	1583	50000	**A704_1583 S1 M1LA4**	298	**A704_1583 P80 BN80A4**	299
0.89	5279	1.5	1558	65000	**A804_1558 S1 M1LA4**	301	**A804_1558 P80 BN80A4**	302
0.92	5070	2.8	1507	75000	**A904_1507 S1 M1LA4**	304	**A904_1507 P80 BN80A4**	305
0.96	4873	1.6	1438	65000	**A804_1438 S1 M1LA4**	301	**A804_1438 P80 BN80A4**	302
1.0	4561	1.1	1346	50000	**A704_1346 S1 M1LA4**	298	**A704_1346 P80 BN80A4**	299
1.0	4541	1.8	1340	65000	**A804_1340 S1 M1LA4**	301	**A804_1340 P80 BN80A4**	302
1.0	4455	3.1	1324	75000	**A904_1324 S1 M1LA4**	304	**A904_1324 P80 BN80A4**	305
1.1	4211	1.2	1242	50000	**A704_1242 S1 M1LA4**	298	**A704_1242 P80 BN80A4**	299

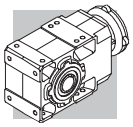

0.55 kW

n_2 min-1	M_2 Nm	S	i	R_{n2} N	IE1		IEC IE1	
1.1	4192	1.9	1237	65000	A804_1237 S1 M1LA4	301	A804_1237 P80 BN80A4	302
1.1	4112	3.4	1222	75000	A904_1222 S1 M1LA4	304	A904_1222 P80 BN80A4	305
1.2	3937	1.3	1161	50000	A704_1161 S1 M1LA4	298	A704_1161 P80 BN80A4	299
1.3	3677	2.2	1085	65000	A804_1085 S1 M1LA4	301	A804_1085 P80 BN80A4	302
1.3	3634	1.4	1072	50000	A704_1072 S1 M1LA4	298	A704_1072 P80 BN80A4	299
1.4	3394	2.4	1001	65000	A804_1001 S1 M1LA4	301	A804_1001 P80 BN80A4	302
1.5	3140	1.6	926.5	50000	A704_926.5 S1 M1LA4	298	A704_926.5 P80 BN80A4	299
1.5	3046	2.6	898.7	65000	A804_898.7 S1 M1LA4	301	A804_898.7 P80 BN80A4	302
1.6	2899	1.7	855.3	50000	A704_855.3 S1 M1LA4	298	A704_855.3 P80 BN80A4	299
1.7	2811	2.8	829.5	65000	A804_829.5 S1 M1LA4	301	A804_829.5 P80 BN80A4	302
1.8	2589	1.9	763.9	50000	A704_763.9 S1 M1LA4	298	A704_763.9 P80 BN80A4	299
1.8	2583	3.1	762.1	65000	A804_762.1 S1 M1LA4	301	A804_762.1 P80 BN80A4	302
1.8	2560	1.1	755.4	30000	A604_755.4 S1 M1LA4	294	A604_755.4 P80 BN80A4	295
2.0	2390	2.1	705.1	50000	A704_705.1 S1 M1LA4	298	A704_705.1 P80 BN80A4	299
2.0	2384	3.4	703.5	65000	A804_703.5 S1 M1LA4	301	A804_703.5 P80 BN80A4	302
2.0	2363	1.2	697.3	30000	A604_697.3 S1 M1LA4	294	A604_697.3 P80 BN80A4	295
2.1	2185	2.3	644.6	50000	A704_644.6 S1 M1LA4	298	A704_644.6 P80 BN80A4	299
2.2	2151	1.3	634.6	30000	A604_634.6 S1 M1LA4	294	A604_634.6 P80 BN80A4	295
2.3	2017	2.5	595.0	50000	A704_595.0 S1 M1LA4	298	A704_595.0 P80 BN80A4	299
2.4	1985	1.4	585.8	30000	A604_585.8 S1 M1LA4	294	A604_585.8 P80 BN80A4	295
2.5	1837	1.5	542.0	30000	A604_542.0 S1 M1LA4	294	A604_542.0 P80 BN80A4	295
2.7	1747	2.9	515.4	50000	A704_515.4 S1 M1LA4	298	A704_515.4 P80 BN80A4	299
2.8	1696	1.7	500.3	30000	A604_500.3 S1 M1LA4	294	A604_500.3 P80 BN80A4	295
2.9	1632	0.9	481.6	20000	A504_481.6 S1 M1LA4	286	A504_481.6 P80 BN80A4	287
2.9	1612	3.1	475.8	50000	A704_475.8 S1 M1LA4	298	A704_475.8 P80 BN80A4	299
3.1	1514	1.0	446.8	20000	A504_446.8 S1 M1LA4	286	A504_446.8 P80 BN80A4	287
3.1	1486	1.9	438.4	30000	A604_438.4 S1 M1LA4	294	A604_438.4 P80 BN80A4	295
3.4	1378	1.1	406.4	20000	A504_406.4 S1 M1LA4	286	A504_406.4 P80 BN80A4	287
3.4	1372	2.0	404.7	30000	A604_404.7 S1 M1LA4	294	A604_404.7 P80 BN80A4	295
3.8	1239	1.2	365.6	20000	A504_365.6 S1 M1LA4	286	A504_365.6 P80 BN80A4	287
3.9	1190	2.4	351.2	30000	A604_351.2 S1 M1LA4	294	A604_351.2 P80 BN80A4	295
4.1	1127	1.3	332.6	20000	A504_332.6 S1 M1LA4	286	A504_332.6 P80 BN80A4	287
4.3	1099	2.5	324.2	30000	A604_324.2 S1 M1LA4	294	A604_324.2 P80 BN80A4	295
4.8	972	1.5	286.8	20000	A504_286.8 S1 M1LA4	286	A504_286.8 P80 BN80A4	287
4.8	970	2.9	286.3	30000	A604_286.3 S1 M1LA4	294	A604_286.3 P80 BN80A4	295
5.2	896	3.1	264.3	30000	A604_264.3 S1 M1LA4	294	A604_264.3 P80 BN80A4	295
5.3	910	0.9	262.5	15000	A413_262.5 S1 M1LA4	282	A413_262.5 P80 BN80A4	283
5.3	884	1.7	260.9	20000	A504_260.9 S1 M1LA4	286	A504_260.9 P80 BN80A4	287
5.7	834	1.0	240.6	15000	A413_240.6 S1 M1LA4	282	A413_240.6 P80 BN80A4	283
5.9	786	1.9	232.0	20000	A504_232.0 S1 M1LA4	286	A504_232.0 P80 BN80A4	287
6.3	753	1.1	217.4	15000	A413_217.4 S1 M1LA4	282	A413_217.4 P80 BN80A4	283
6.5	715	2.1	211.0	20000	A504_211.0 S1 M1LA4	286	A504_211.0 P80 BN80A4	287
7.0	685	1.2	197.5	15000	A413_197.5 S1 M1LA4	282	A413_197.5 P80 BN80A4	283
7.1	673	3.0	194.2	30000	A553_194.2 S1 M1LA4	290	A553_194.2 P80 BN80A4	291
7.2	660	2.3	190.6	20000	A503_190.6 S1 M1LA4	286	A503_190.6 P80 BN80A4	287
7.3	653	0.9	188.3	12000	A353_188.3 S1 M1LA4	278	A353_188.3 P80 BN80A4	279
7.5	639	1.3	184.4	15000	A413_184.4 S1 M1LA4	282	A413_184.4 P80 BN80A4	283
7.9	607	3.3	175.0	30000	A553_175.0 S1 M1LA4	290	A553_175.0 P80 BN80A4	291
8.0	601	2.5	173.4	20000	A503_173.4 S1 M1LA4	286	A503_173.4 P80 BN80A4	287
8.0	595	1.0	171.8	12000	A353_171.8 S1 M1LA4	278	A353_171.8 P80 BN80A4	279
9.0	532	2.8	154.6	20000	A503_154.6 S1 M1LA4	286	A503_154.6 P80 BN80A4	287
9.2	522	1.1	150.6	12000	A353_150.6 S1 M1LA4	278	A353_150.6 P80 BN80A4	279
9.4	509	1.7	146.9	15000	A413_146.9 S1 M1LA4	282	A413_146.9 P80 BN80A4	283
9.9	484	3.1	140.6	20000	A503_140.6 S1 M1LA4	286	A503_140.6 P80 BN80A4	287
10.1	472	1.2	136.3	12000	A353_136.3 S1 M1LA4	278	A353_136.3 P80 BN80A4	279
10.7	446	3.4	129.7	20000	A503_129.7 S1 M1LA4	286	A503_129.7 P80 BN80A4	287
11.8	405	1.4	116.9	12000	A353_116.9 S1 M1LA4	278	A353_116.9 P80 BN80A4	279
11.9	402	2.1	115.9	15000	A413_115.9 S1 M1LA4	282	A413_115.9 P80 BN80A4	283
13.1	366	1.4	105.5	12000	A353_105.5 S1 M1LA4	278	A353_105.5 P80 BN80A4	279
14.2	349	0.9	97.5	9600			A302_97.5 P80 BN80A4	275
14.4	342	1.6	95.6	12000	A352_95.6 S1 M1LA4	278	A352_95.6 P80 BN80A4	279
14.9	321	2.5	92.8	15000	A413_92.8 S1 M1LA4	282	A413_92.8 P80 BN80A4	283
15.9	310	1.0	86.7	9420			A302_86.7 P80 BN80A4	275
16.7	295	2.0	82.5	12000	A352_82.5 S1 M1LA4	278	A352_82.5 P80 BN80A4	279
17.4	284	3.0	79.2	15000	A412_79.2 S1 M1LA4	282	A412_79.2 P80 BN80A4	283

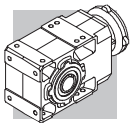

0.55 kW

n_2 min-1	M_2 Nm	S	i	R_{n2} N	IE1		IEC IE1	
18.0	274	1.3	76.5	9180	**A302_76.5 S1 M1LA4**	274	**A302_76.5 P80 BN80A4**	275
18.6	266	2.3	74.3	12000	**A352_74.3 S1 M1LA4**	278	**A352_74.3 P80 BN80A4**	279
19.4	255	3.3	71.3	15000	**A412_71.3 S1 M1LA4**	282	**A412_71.3 P80 BN80A4**	283
20.9	236	1.6	66.0	8880	**A302_66.0 S1 M1LA4**	274	**A302_66.0 P80 BN80A4**	275
21.0	236	2.5	65.8	12000	**A352_65.8 S1 M1LA4**	278	**A352_65.8 P80 BN80A4**	279
21.9	226	1.1	63.1	5840	**A202_63.1 S1 M1LA4**	270	**A202_63.1 P80 BN80A4**	271
22.9	216	2.8	60.4	12000	**A352_60.4 S1 M1LA4**	278	**A352_60.4 P80 BN80A4**	279
23.2	213	1.9	59.4	8660	**A302_59.4 S1 M1LA4**	274	**A302_59.4 P80 BN80A4**	275
25.4	194	3.1	54.3	12000	**A352_54.3 S1 M1LA4**	278	**A352_54.3 P80 BN80A4**	279
25.7	192	1.3	53.7	5670	**A202_53.7 S1 M1LA4**	270	**A202_53.7 P80 BN80A4**	271
26.2	189	2.2	52.7	8410	**A302_52.7 S1 M1LA4**	274	**A302_52.7 P80 BN80A4**	275
28.1	176	3.4	49.1	12000	**A352_49.1 S1 M1LA4**	278	**A352_49.1 P80 BN80A4**	279
28.6	173	1.4	48.3	5560	**A202_48.3 S1 M1LA4**	270	**A202_48.3 P80 BN80A4**	271
28.6	173	2.4	48.3	8230	**A302_48.3 S1 M1LA4**	274	**A302_48.3 P80 BN80A4**	275
30	163	0.9	45.4	4910	**A102_45.4 S1 M1LA4**	266	**A102_45.4 P80 BN80A4**	267
32	155	2.6	43.4	8010	**A302_43.4 S1 M1LA4**	274	**A302_43.4 P80 BN80A4**	275
32	155	1.6	43.2	5440	**A202_43.2 S1 M1LA4**	270	**A202_43.2 P80 BN80A4**	271
34	146	1.0	40.9	5500	**A102_40.9 S1 M1LA4**	266	**A102_40.9 P80 BN80A4**	267
35	142	1.8	39.6	5340	**A202_39.6 S1 M1LA4**	270	**A202_39.6 P80 BN80A4**	271
35	141	2.9	39.3	7800	**A302_39.3 S1 M1LA4**	274	**A302_39.3 P80 BN80A4**	275
38	131	3.1	36.6	7660	**A302_36.6 S1 M1LA4**	274	**A302_36.6 P80 BN80A4**	275
39	127	2.0	35.4	5200	**A202_35.4 S1 M1LA4**	270	**A202_35.4 P80 BN80A4**	271
39	126	1.2	35.1	4700	**A102_35.1 S1 M1LA4**	266	**A102_35.1 P80 BN80A4**	267
41	120	3.4	33.4	7480	**A302_33.4 S1 M1LA4**	274	**A302_33.4 P80 BN80A4**	275
43	115	1.3	32.2	5490	**A102_32.2 S1 M1LA4**	266	**A102_32.2 P80 BN80A4**	267
44	112	2.2	31.3	5060	**A202_31.3 S1 M1LA4**	270	**A202_31.3 P80 BN80A4**	271
47	105	2.4	29.2	4970	**A202_29.2 S1 M1LA4**	270	**A202_29.2 P80 BN80A4**	271
48	102	1.0	28.6	2550	**A052_28.6 S1 M1LA4**	263	**A052_28.6 P80 BN80A4**	263
48	102	1.5	28.6	4510	**A102_28.6 S1 M1LA4**	266	**A102_28.6 P80 BN80A4**	267
52	95	2.6	26.5	4850	**A202_26.5 S1 M1LA4**	270	**A202_26.5 P80 BN80A4**	271
54	91	1.1	25.5	2510	**A052_25.5 S1 M1LA4**	263	**A052_25.5 P80 BN80A4**	263
54	91	1.6	25.5	5230	**A102_25.5 S1 M1LA4**	266	**A102_25.5 P80 BN80A4**	267
58	85	1.2	23.8	2490	**A052_23.8 S1 M1LA4**	263	**A052_23.8 P80 BN80A4**	263
58	85	1.8	23.8	4330	**A102_23.8 S1 M1LA4**	266	**A102_23.8 P80 BN80A4**	267
60	83	3.0	23.1	4690	**A202_23.1 S1 M1LA4**	270	**A202_23.1 P80 BN80A4**	271
65	76	1.3	21.4	2450	**A052_21.4 S1 M1LA4**	263	**A052_21.4 P80 BN80A4**	263
65	76	2.0	21.4	5020	**A102_21.4 S1 M1LA4**	266	**A102_21.4 P80 BN80A4**	267
65	76	3.3	21.2	4590	**A202_21.2 S1 M1LA4**	270	**A202_21.2 P80 BN80A4**	271
74	66	1.5	18.6	2400	**A052_18.6 S1 M1LA4**	263	**A052_18.6 P80 BN80A4**	263
74	66	2.3	18.6	4090	**A102_18.6 S1 M1LA4**	266	**A102_18.6 P80 BN80A4**	267
84	59	1.7	16.4	2340	**A052_16.4 S1 M1LA4**	263	**A052_16.4 P80 BN80A4**	263
84	59	2.5	16.4	4710	**A102_16.4 S1 M1LA4**	266	**A102_16.4 P80 BN80A4**	267
99	50	2.0	13.9	2270	**A052_13.9 S1 M1LA4**	263	**A052_13.9 P80 BN80A4**	263
99	50	3.0	13.9	3800	**A102_13.9 S1 M1LA4**	266	**A102_13.9 P80 BN80A4**	267
112	44	2.3	12.3	2220	**A052_12.3 S1 M1LA4**	263	**A052_12.3 P80 BN80A4**	263
112	44	3.2	12.3	3670	**A102_12.3 S1 M1LA4**	266	**A102_12.3 P80 BN80A4**	267
131	38	2.6	10.6	2130	**A052_10.6 S1 M1LA4**	263	**A052_10.6 P80 BN80A4**	263
144	34	2.9	9.6	2100	**A052_9.6 S1 M1LA4**	263	**A052_9.6 P80 BN80A4**	263
162	30	3.3	8.5	2030	**A052_8.5 S1 M1LA4**	263	**A052_8.5 P80 BN80A4**	263
171	29	3.1	16.4	2000	**A052_16.4 S1 M1SD2**	263	**A052_16.4 P71 BN71B2**	263
191	26	3.9	7.2	1950	**A052_7.2 S1 M1LA4**	263	**A052_7.2 P80 BN80A4**	263
218	23	4.4	6.3	1880	**A052_6.3 S1 M1LA4**	263	**A052_6.3 P80 BN80A4**	263
229	22	4.6	12.3	1860	**A052_12.3 S1 M1SD2**	263	**A052_12.3 P71 BN71B2**	263
252	19.6	4.9	5.5	1810	**A052_5.5 S1 M1LA4**	263	**A052_5.5 P80 BN80A4**	263
267	18.5	4.3	10.6	1780	**A052_10.6 S1 M1SD2**	263	**A052_10.6 P71 BN71B2**	263
293	16.8	5.6	9.6	1740	**A052_9.6 S1 M1SD2**	263	**A052_9.6 P71 BN71B2**	263
331	14.9	6.0	8.5	1680	**A052_8.5 S1 M1SD2**	263	**A052_8.5 P71 BN71B2**	263
391	12.6	6.7	7.2	1600	**A052_7.2 S1 M1SD2**	263	**A052_7.2 P71 BN71B2**	263
445	11.1	7.2	6.3	1540	**A052_6.3 S1 M1SD2**	263	**A052_6.3 P71 BN71B2**	263
516	9.6	7.8	5.5	1480	**A052_5.5 S1 M1SD2**	263	**A052_5.5 P71 BN71B2**	263

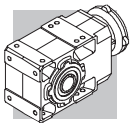

0.75 kW

n_2 min-1	M_2 Nm	S	i	R_{n2} N	IE2		IEC IE2	
0.58	11068	1.3	1632	75000	**A904_1632 S3 ME3SA6**	304	**A904_ 1632 P90 BE90S6**	305
0.62	10220	1.4	1507	75000	**A904_1507 S3 ME3SA6**	304	**A904_ 1507 P90 BE90S6**	305
0.71	8979	1.6	1324	75000	**A904_1324 S3 ME3SA6**	304	**A904_ 1324 P90 BE90S6**	305
0.77	8287	1.7	1222	75000	**A904_1222 S3 ME3SA6**	304	**A904_ 1222 P90 BE90S6**	305
0.88	7264	1.9	1632	75000	**A904_1632 S2 ME2SB4**	304	**A904_1632 P80 BE80B4**	305
0.92	6932	1.2	1558	65000	**A804_1558 S2 ME2SB4**	301	**A804_1558 P80 BE80B4**	302
0.95	6705	2.1	1507	75000	**A904_1507 S2 ME2SB4**	304	**A904_1507 P80 BE80B4**	305
0.99	6398	1.3	1438	65000	**A804_1438 S2 ME2SB4**	301	**A804_1438 P80 BE80B4**	302
1.1	5963	1.3	1340	65000	**A804_1340 S2 ME2SB4**	301	**A804_1340 P80 BE80B4**	302
1.1	5892	2.4	1324	75000	**A904_1324 S2 ME2SB4**	304	**A904_1324 P80 BE80B4**	305
1.2	5528	0.9	1242	50000	**A704_1242 S2 ME2SB4**	298	**A704_1242 P80 BE80B4**	299
1.2	5504	1.5	1237	65000	**A804_1237 S2 ME2SB4**	301	**A804_1237 P80 BE80B4**	302
1.2	5439	2.6	1222	75000	**A904_1222 S2 ME2SB4**	304	**A904_1222 P80 BE80B4**	305
1.2	5169	1.0	1161	50000	**A704_1161 S2 ME2SB4**	298	**A704_1161 P80 BE80B4**	299
1.3	4942	2.8	1111	75000	**A904_1111 S2 ME2SB4**	304	**A904_1111 P80 BE80B4**	305
1.3	4828	1.7	1085	65000	**A804_1085 S2 ME2SB4**	301	**A804_1085 P80 BE80B4**	302
1.3	4771	1.0	1072	50000	**A704_1072 S2 ME2SB4**	298	**A704_1072 P80 BE80B4**	299
1.4	4562	3.1	1025	75000	**A904_1025 S2 ME2SB4**	304	**A904_1025 P80 BE80B4**	305
1.4	4456	1.8	1001	65000	**A804_1001 S2 ME2SB4**	301	**A804_1001 P80 BE80B4**	302
1.5	4170	3.4	937.2	75000	**A904_937.2 S2 ME2SB4**	304	**A904_937.2 P80 BE80B4**	305
1.5	4123	1.2	926.5	50000	**A704_926.5 S2 ME2SB4**	298	**A704_926.5 P80 BE80B4**	299
1.6	3999	2.0	898.7	65000	**A804_898.7 S2 ME2SB4**	301	**A804_898.7 P80 BE80B4**	302
1.7	3806	1.3	855.3	50000	**A704_855.3 S2 ME2SB4**	298	**A704_855.3 P80 BE80B4**	299
1.7	3691	2.2	829.5	65000	**A804_829.5 S2 ME2SB4**	301	**A804_829.5 P80 BE80B4**	302
1.9	3399	1.5	763.9	50000	**A704_763.9 S2 ME2SB4**	298	**A704_763.9 P80 BE80B4**	299
1.9	3391	2.4	762.1	65000	**A804_762.1 S2 ME2SB4**	301	**A804_762.1 P80 BE80B4**	302
2.0	3138	1.6	705.1	50000	**A704_705.1 S2 ME2SB4**	298	**A704_705.1 P80 BE80B4**	299
2.0	3130	2.6	703.5	65000	**A804_703.5 S2 ME2SB4**	301	**A804_703.5 P80 BE80B4**	302
2.1	3103	0.9	697.3	30000	**A604_697.3 S2 ME2SB4**	294	**A604_697.3 P80 BE80B4**	295
2.2	2869	1.7	644.6	50000	**A704_644.6 S2 ME2SB4**	298	**A704_644.6 P80 BE80B4**	299
2.3	2824	1.0	634.6	30000	**A604_634.6 S2 ME2SB4**	294	**A604_634.6 P80 BE80B4**	295
2.4	2702	3.0	607.2	65000	**A804_607.2 S2 ME2SB4**	301	**A804_607.2 P80 BE80B4**	302
2.4	2648	1.9	595.0	50000	**A704_595.0 S2 ME2SB4**	298	**A704_595.0 P80 BE80B4**	299
2.4	2607	1.1	585.8	30000	**A604_585.8 S2 ME2SB4**	294	**A604_585.8 P80 BE80B4**	295
2.6	2494	3.2	560.5	65000	**A804_560.5 S2 ME2SB4**	301	**A804_560.5 P80 BE80B4**	302
2.6	2412	1.2	542.0	30000	**A604_542.0 S2 ME2SB4**	294	**A604_542.0 P80 BE80B4**	295
2.8	2294	2.2	515.4	50000	**A704_515.4 S2 ME2SB4**	298	**A704_515.4 P80 BE80B4**	299
2.9	2226	1.3	500.3	30000	**A604_500.3 S2 ME2SB4**	294	**A604_500.3 P80 BE80B4**	295
3.0	2117	2.4	475.8	50000	**A704_475.8 S2 ME2SB4**	298	**A704_475.8 P80 BE80B4**	299
3.3	1951	1.4	438.4	30000	**A604_438.4 S2 ME2SB4**	294	**A604_438.4 P80 BE80B4**	295
3.5	1842	1.1	414.0	30000	**A554_414.0 S2 ME2SB4**	290	**A554_414.0 P80 BE80B4**	291
3.5	1801	1.6	404.7	30000	**A604_404.7 S2 ME2SB4**	294	**A604_404.7 P80 BE80B4**	295
3.6	1781	2.8	400.2	50000	**A704_400.2 S2 ME2SB4**	298	**A704_400.2 P80 BE80B4**	299
3.9	1644	3.0	369.4	50000	**A704_369.4 S2 ME2SB4**	298	**A704_369.4 P80 BE80B4**	299
3.9	1627	0.9	365.6	20000	**A504_365.6 S2 ME2SB4**	286	**A504_365.6 P80 BE80B4**	287
4.1	1563	1.8	351.2	30000	**A604_351.2 S2 ME2SB4**	294	**A604_351.2 P80 BE80B4**	295
4.3	1480	1.0	332.6	20000	**A504_332.6 S2 ME2SB4**	286	**A504_332.6 P80 BE80B4**	287
4.4	1445	1.4	324.7	30000	**A554_324.7 S2 ME2SB4**	290	**A554_324.7 P80 BE80B4**	291
4.4	1443	1.9	324.2	30000	**A604_324.2 S2 ME2SB4**	294	**A604_324.2 P80 BE80B4**	295
4.5	1408	3.6	316.4	50000	**A704_316.4 S2 ME2SB4**	298	**A704_316.4 P80 BE80B4**	299
5.0	1276	1.2	286.8	20000	**A504_286.8 S2 ME2SB4**	286	**A504_286.8 P80 BE80B4**	287
5.0	1274	2.2	286.3	30000	**A604_286.3 S2 ME2SB4**	294	**A604_286.3 P80 BE80B4**	295
5.4	1176	2.4	264.3	30000	**A604_264.3 S2 ME2SB4**	294	**A604_264.3 P80 BE80B4**	295
5.4	1169	1.7	262.6	30000	**A554_262.6 S2 ME2SB4**	290	**A554_262.6 P80 BE80B4**	291
5.5	1161	1.3	260.9	20000	**A504_260.9 S2 ME2SB4**	286	**A504_260.9 P80 BE80B4**	287
6.2	1032	1.5	232.0	20000	**A504_232.0 S2 ME2SB4**	286	**A504_232.0 P80 BE80B4**	287
6.3	1006	2.8	226.1	30000	**A604_226.1 S2 ME2SB4**	294	**A604_226.1 P80 BE80B4**	295
6.8	939	1.6	211.0	20000	**A504_211.0 S2 ME2SB4**	286	**A504_211.0 P80 BE80B4**	287
6.9	929	3.0	208.7	30000	**A604_208.7 S2 ME2SB4**	294	**A604_208.7 P80 BE80B4**	295
6.9	926	2.1	208.1	30000	**A554_208.1 S2 ME2SB4**	290	**A554_208.1 P80 BE80B4**	291
7.2	899	0.9	197.5	15000	**A413_197.5 S2 ME2SB4**	282	**A413_197.5 P80 BE80B4**	283
7.4	884	2.3	194.2	30000	**A553_194.2 S2 ME2SB4**	290	**A553_194.2 P80 BE80B4**	291
7.5	867	1.7	190.6	20000	**A503_190.6 S2 ME2SB4**	286	**A503_190.6 P80 BE80B4**	287
7.7	845	3.3	185.8	30000	**A603_185.8 S2 ME2SB4**	294	**A603_185.8 P80 BE80B4**	295
7.8	839	1.0	184.4	15000	**A413_184.4 S2 ME2SB4**	282	**A413_184.4 P80 BE80B4**	283

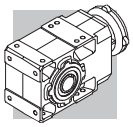

0.75 kW

n_2 min-1	M_2 Nm	S	i	R_{n2} N	IE2		IEC IE2	
8.2	796	2.5	175.0	30000	**A553_175.0 S2 ME2SB4**	290	**A553_175.0 P80 BE80B4**	291
8.2	789	1.9	173.4	20000	**A503_173.4 S2 ME2SB4**	286	**A503_173.4 P80 BE80B4**	287
8.3	780	3.6	171.5	30000	**A603_171.5 S2 ME2SB4**	294	**A603_171.5 P80 BE80B4**	295
8.9	730	2.7	160.4	30000	**A553_160.4 S2 ME2SB4**	290	**A553_160.4 P80 BE80B4**	291
9.3	703	2.1	154.6	20000	**A503_154.6 S2 ME2SB4**	286	**A503_154.6 P80 BE80B4**	287
9.7	668	1.3	146.9	15000	**A413_146.9 S2 ME2SB4**	282	**A413_146.9 P80 BE80B4**	283
9.7	668	3.0	146.8	30000	**A553_146.8 S2 ME2SB4**	290	**A553_146.8 P80 BE80B4**	291
10.2	640	2.3	140.6	20000	**A503_140.6 S2 ME2SB4**	286	**A503_140.6 P80 BE80B4**	287
10.5	620	0.9	136.3	12000	**A353_136.3 S2 ME2SB4**	278	**A353_136.3 P80 BE80B4**	279
10.8	604	3.3	132.7	30000	**A553_132.7 S2 ME2SB4**	290	**A553_132.7 P80 BE80B4**	291
11.0	590	2.5	129.7	20000	**A503_129.7 S2 ME2SB4**	286	**A503_129.7 P80 BE80B4**	287
11.5	564	3.5	123.9	30000	**A553_123.9 S2 ME2SB4**	290	**A553_123.9 P80 BE80B4**	291
12.1	537	2.8	118.0	20000	**A503_118.0 S2 ME2SB4**	286	**A503_118.0 P80 BE80B4**	287
12.2	532	1.1	116.9	12000	**A353_116.9 S2 ME2SB4**	278	**A353_116.9 P80 BE80B4**	279
12.3	527	1.6	115.9	15000	**A413_115.9 S2 ME2SB4**	282	**A413_115.9 P80 BE80B4**	283
13.1	498	3.0	109.4	20000	**A503_109.4 S2 ME2SB4**	286	**A503_109.4 P80 BE80B4**	287
13.5	480	1.1	105.5	12000	**A353_105.5 S2 ME2SB4**	278	**A353_105.5 P80 BE80B4**	279
14.4	453	3.3	99.5	20000	**A503_99.5 S2 ME2SB4**	286	**A503_99.5 P80 BE80B4**	287
15.0	450	1.2	95.6	12000	**A352_95.6 S2 ME2SB4**	278	**A352_95.6 P80 BE80B4**	279
15.4	422	1.9	92.8	15000	**A413_92.8 S2 ME2SB4**	282	**A413_92.8 P80 BE80B4**	283
17.3	388	1.5	82.5	12000	**A352_82.5 S2 ME2SB4**	278	**A352_82.5 P80 BE80B4**	279
18.0	372	2.3	79.2	15000	**A412_79.2 S2 ME2SB4**	282	**A412_79.2 P80 BE80B4**	283
18.7	360	1.0	76.5	8580	**A302_76.5 S2 ME2SB4**	274	**A302_76.5 P80 BE80B4**	275
19.3	349	1.7	74.3	12000	**A352_74.3 S2 ME2SB4**	278	**A352_74.3 P80 BE80B4**	279
20.1	335	2.5	71.3	15000	**A412_71.3 S2 ME2SB4**	282	**A412_71.3 P80 BE80B4**	283
21.7	310	1.3	66.0	8360	**A302_66.0 S2 ME2SB4**	274	**A302_66.0 P80 BE80B4**	275
21.7	309	1.9	65.8	12000	**A352_65.8 S2 ME2SB4**	278	**A352_65.8 P80 BE80B4**	279
22.3	302	2.8	64.2	15000	**A412_64.2 S2 ME2SB4**	282	**A412_64.2 P80 BE80B4**	283
23.7	284	2.1	60.4	12000	**A352_60.4 S2 ME2SB4**	278	**A352_60.4 P80 BE80B4**	279
24.1	279	1.4	59.4	8190	**A302_59.4 S2 ME2SB4**	274	**A302_59.4 P80 BE80B4**	275
24.3	276	3.1	58.8	15000	**A412_58.8 S2 ME2SB4**	282	**A412_58.8 P80 BE80B4**	283
26.3	255	2.4	54.3	12000	**A352_54.3 S2 ME2SB4**	278	**A352_54.3 P80 BE80B4**	279
26.7	252	1.0	53.7	5210	**A202_53.7 S2 ME2SB4**	270	**A202_53.7 P80 BE80B4**	271
26.9	250	3.4	53.1	15000	**A412_53.1 S2 ME2SB4**	282	**A412_53.1 P80 BE80B4**	283
27.1	248	1.7	52.7	7990	**A302_52.7 S2 ME2SB4**	274	**A302_52.7 P80 BE80B4**	275
29.1	231	2.6	49.1	12000	**A352_49.1 S2 ME2SB4**	278	**A352_49.1 P80 BE80B4**	279
29.6	227	1.1	48.3	5140	**A202_48.3 S2 ME2SB4**	270	**A202_48.3 P80 BE80B4**	271
29.6	227	1.8	48.3	7840	**A302_48.3 S2 ME2SB4**	274	**A302_48.3 P80 BE80B4**	275
31	215	2.8	45.8	12000	**A352_45.8 S2 ME2SB4**	278	**A352_45.8 P80 BE80B4**	279
33	204	2.0	43.4	7660	**A302_43.4 S2 ME2SB4**	274	**A302_43.4 P80 BE80B4**	275
33	203	1.2	43.2	5060	**A202_43.2 S2 ME2SB4**	270	**A202_43.2 P80 BE80B4**	271
34	196	3.1	41.8	11900	**A352_41.8 S2 ME2SB4**	278	**A352_41.8 P80 BE80B4**	279
36	186	1.3	39.6	4990	**A202_39.6 S2 ME2SB4**	270	**A202_39.6 P80 BE80B4**	271
36	185	2.2	39.3	7480	**A302_39.3 S2 ME2SB4**	274	**A302_39.3 P80 BE80B4**	275
39	172	2.4	36.6	7360	**A302_36.6 S2 ME2SB4**	274	**A302_36.6 P80 BE80B4**	275
39	172	3.5	36.6	11500	**A352_36.6 S2 ME2SB4**	278	**A352_36.6 P80 BE80B4**	279
40	167	1.5	35.4	4890	**A202_35.4 S2 ME2SB4**	270	**A202_35.4 P80 BE80B4**	271
41	165	0.9	35.1	4320	**A102_35.1 S2 ME2SB4**	266	**A102_35.1 P80 BE80B4**	267
43	157	2.6	33.4	7200	**A302_33.4 S2 ME2SB4**	274	**A302_33.4 P80 BE80B4**	275
44	151	1.0	32.2	5080	**A102_32.2 S2 ME2SB4**	266	**A102_32.2 P80 BE80B4**	267
46	147	1.7	31.3	4780	**A202_31.3 S2 ME2SB4**	270	**A202_31.3 P80 BE80B4**	271
49	138	3.0	29.3	6960	**A302_29.3 S2 ME2SB4**	274	**A302_29.3 P80 BE80B4**	275
49	137	1.8	29.2	4710	**A202_29.2 S2 ME2SB4**	270	**A202_29.2 P80 BE80B4**	271
50	134	1.1	28.6	4200	**A102_28.6 S2 ME2SB4**	266	**A102_28.6 P80 BE80B4**	267
54	125	3.3	26.5	6790	**A302_26.5 S2 ME2SB4**	274	**A302_26.5 P80 BE80B4**	275
54	124	2.0	26.5	4620	**A202_26.5 S2 ME2SB4**	270	**A202_26.5 P80 BE80B4**	271
56	120	1.3	25.5	4900	**A102_25.5 S2 ME2SB4**	266	**A102_25.5 P80 BE80B4**	267
60	112	0.9	23.8	2200	**A052_23.8 S2 ME2SB4**	263	**A052_23.8 P80 BE80B4**	263
60	112	1.3	23.8	4070	**A102_23.8 S2 ME2SB4**	266	**A102_23.8 P80 BE80B4**	267
62	109	2.3	23.1	4480	**A202_23.1 S2 ME2SB4**	270	**A202_23.1 P80 BE80B4**	271
67	100	1.0	21.4	2210	**A052_21.4 S2 ME2SB4**	263	**A052_21.4 P80 BE80B4**	263
67	100	1.5	21.4	4740	**A102_21.4 S2 ME2SB4**	266	**A102_21.4 P80 BE80B4**	267
67	100	2.5	21.2	4390	**A202_21.2 S2 ME2SB4**	270	**A202_21.2 P80 BE80B4**	271
77	87	1.1	18.6	2190	**A052_18.6 S2 ME2SB4**	263	**A052_18.6 P80 BE80B4**	263
77	87	1.7	18.6	3880	**A102_18.6 S2 ME2SB4**	266	**A102_18.6 P80 BE80B4**	267

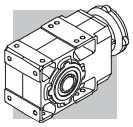

0.75 kW

n_2 min-1	M_2 Nm	S	i	R_{n2} N	IE2		IEC IE2	
79	85	2.9	18.1	4230	**A202_18.1 S2 ME2SB4**	270	**A202_18.1 P80 BE80B4**	271
87	77	1.3	16.4	2160	**A052_16.4 S2 ME2SB4**	263	**A052_16.4 P80 BE80B4**	263
87	77	1.9	16.4	4490	**A102_16.4 S2 ME2SB4**	266	**A102_16.4 P80 BE80B4**	267
88	76	3.3	16.2	4110	**A202_16.2 S2 ME2SB4**	270	**A202_16.2 P80 BE80B4**	271
103	65	1.5	13.9	2110	**A052_13.9 S2 ME2SB4**	263	**A052_13.9 P80 BE80B4**	263
103	65	2.3	13.9	3640	**A102_13.9 S2 ME2SB4**	266	**A102_13.9 P80 BE80B4**	267
116	58	1.7	12.3	2080	**A052_12.3 S2 ME2SB4**	263	**A052_12.3 P80 BE80B4**	263
116	58	2.4	12.3	3530	**A102_12.3 S2 ME2SB4**	266	**A102_12.3 P80 BE80B4**	267
135	50	2.0	10.6	2010	**A052_10.6 S2 ME2SB4**	263	**A052_10.6 P80 BE80B4**	263
135	50	3.0	10.6	3400	**A102_10.6 S2 ME2SB4**	266	**A102_10.6 P80 BE80B4**	267
149	45	2.2	9.6	1990	**A052_9.6 S2 ME2SB4**	263	**A052_9.6 P80 BE80B4**	263
149	45	3.1	9.6	3320	**A102_9.6 S2 ME2SB4**	266	**A102_9.6 P80 BE80B4**	267
168	40	2.5	8.5	1940	**A052_8.5 S2 ME2SB4**	263	**A052_8.5 P80 BE80B4**	263
168	40	3.5	8.5	3820	**A102_8.5 S2 ME2SB4**	266	**A102_8.5 P80 BE80B4**	267
198	34	3.0	7.2	1870	**A052_7.2 S2 ME2SB4**	263	**A052_7.2 P80 BE80B4**	263
226	30	3.4	6.3	1810	**A052_6.3 S2 ME2SB4**	263	**A052_6.3 P80 BE80B4**	263
262	26	3.7	5.5	1750	**A052_5.5 S2 ME2SB4**	263	**A052_5.5 P80 BE80B4**	263
270	25	3.2	10.6	1720	**A052_10.6 S2 ME2SA2**	263	**A052_10.6 P80 BE80A2**	263
296	23	4.2	9.6	1690	**A052_9.6 S2 ME2SA2**	263	**A052_9.6 P80 BE80A2**	263
335	20	4.5	8.5	1640	**A052_8.5 S2 ME2SA2**	263	**A052_8.5 P80 BE80A2**	263
395	17.0	5.0	7.2	1570	**A052_7.2 S2 ME2SA2**	263	**A052_7.2 P80 BE80A2**	263
450	15.0	5.3	6.3	1510	**A052_6.3 S2 ME2SA2**	263	**A052_6.3 P80 BE80A2**	263
521	12.9	5.8	5.5	1450	**A052_5.5 S2 ME2SA2**	263	**A052_5.5 P80 BE80A2**	263

1.1 kW

n_2 min-1	M_2 Nm	S	i	R_{n2} N	IE2		IEC IE2	
0.63	14914	0.9	1507	75000	**A904_1507 S3 ME3LA6**	304	**A904_1507 P100 BE100M6**	305
0.71	13103	1.1	1324	75000	**A904_1324 S3 ME3LA6**	304	**A904_1324 P100 BE100M6**	305
0.77	12094	1.2	1222	75000	**A904_1222 S3 ME3LA6**	304	**A904_1222 P100 BE100M6**	305
0.88	10751	1.3	1632	75000	**A904_1632 S3 ME3SA4**	304	**A904_1632 P90 BE90S4**	305
0.95	9924	1.4	1507	75000	**A904_1507 S3 ME3SA4**	304	**A904_1507 P90 BE90S4**	305
1.1	8825	0.9	1340	65000	**A804_1340 S3 ME3SA4**	301	**A804_1340 P90 BE90S4**	302
1.1	8720	1.6	1324	75000	**A904_1324 S3 ME3SA4**	304	**A904_1324 P90 BE90S4**	305
1.2	8146	1.0	1237	65000	**A804_1237 S3 ME3SA4**	301	**A804_1237 P90 BE90S4**	302
1.2	8049	1.7	1222	75000	**A904_1222 S3 ME3SA4**	304	**A904_1222 P90 BE90S4**	305
1.3	7314	1.9	1111	75000	**A904_1111 S3 ME3SA4**	304	**A904_1111 P90 BE90S4**	305
1.3	7145	1.1	1085	65000	**A804_1085 S3 ME3SA4**	301	**A804_1085 P90 BE90S4**	302
1.4	6752	2.1	1025	75000	**A904_1025 S3 ME3SA4**	304	**A904_1025 P90 BE90S4**	305
1.4	6595	1.2	1001	65000	**A804_1001 S3 ME3SA4**	301	**A804_1001 P90 BE90S4**	302
1.5	6172	2.3	937.2	75000	**A904_937.2 S3 ME3SA4**	304	**A904_937.2 P90 BE90S4**	305
1.6	5919	1.4	898.7	65000	**A804_898.7 S3 ME3SA4**	301	**A804_898.7 P90 BE90S4**	302
1.7	5697	2.5	865.1	75000	**A904_865.1 S3 ME3SA4**	304	**A904_865.1 P90 BE90S4**	305
1.7	5633	0.9	855.3	50000	**A704_855.3 S3 ME3SA4**	298	**A704_855.3 P90 BE90S4**	299
1.7	5463	1.5	829.5	65000	**A804_829.5 S3 ME3SA4**	301	**A804_829.5 P90 BE90S4**	302
1.9	5051	2.8	766.9	75000	**A904_766.9 S3 ME3SA4**	304	**A904_766.9 P90 BE90S4**	305
1.9	5031	1.0	763.9	50000	**A704_763.9 S3 ME3SA4**	298	**A704_763.9 P90 BE90S4**	299
1.9	5019	1.6	762.1	65000	**A804_762.1 S3 ME3SA4**	301	**A804_762.1 P90 BE90S4**	302
2.0	4662	3.0	707.9	75000	**A904_707.9 S3 ME3SA4**	304	**A904_707.9 P90 BE90S4**	305
2.0	4644	1.1	705.1	50000	**A704_705.1 S3 ME3SA4**	298	**A704_705.1 P90 BE90S4**	299
2.0	4633	1.7	703.5	65000	**A804_703.5 S3 ME3SA4**	301	**A804_703.5 P90 BE90S4**	302
2.2	4245	1.2	644.6	50000	**A704_644.6 S3 ME3SA4**	298	**A704_644.6 P90 BE90S4**	299
2.4	3999	2.0	607.2	65000	**A804_607.2 S3 ME3SA4**	301	**A804_607.2 P90 BE90S4**	302
2.4	3962	3.5	601.6	75000	**A904_601.6 S3 ME3SA4**	304	**A904_601.6 P90 BE90S4**	305
2.4	3919	1.3	595.0	50000	**A704_595.0 S3 ME3SA4**	298	**A704_595.0 P90 BE90S4**	299
2.6	3691	2.2	560.5	65000	**A804_560.5 S3 ME3SA4**	301	**A804_560.5 P90 BE90S4**	302
2.8	3394	1.5	515.4	50000	**A704_515.4 S3 ME3SA4**	298	**A704_515.4 P90 BE90S4**	299
3.0	3154	2.5	478.9	65000	**A804_478.9 S3 ME3SA4**	301	**A804_478.9 P90 BE90S4**	302
3.0	3133	1.6	475.8	50000	**A704_475.8 S3 ME3SA4**	298	**A704_475.8 P90 BE90S4**	299

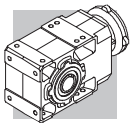

1.1 kW

n_2 min-1	M_2 Nm	S	i	R_{n2} N	IE2		IEC IE2	
3.2	2912	2.7	442.1	65000	**A804_442.1 S3 ME3SA4**	301	**A804_442.1 P90 BE90S4**	302
3.3	2887	1.0	438.4	30000	**A604_438.4 S3 ME3SA4**	294	**A604_438.4 P90 BE90S4**	295
3.5	2665	1.1	404.7	30000	**A604_404.7 S3 ME3SA4**	294	**A604_404.7 P90 BE90S4**	295
3.6	2635	1.9	400.2	50000	**A704_400.2 S3 ME3SA4**	298	**A704_400.2 P90 BE90S4**	299
3.7	2526	3.2	383.5	65000	**A804_383.5 S3 ME3SA4**	301	**A804_383.5 P90 BE90S4**	302
3.9	2433	2.1	369.4	50000	**A704_369.4 S3 ME3SA4**	298	**A704_369.4 P90 BE90S4**	299
4.0	2331	3.4	354.0	65000	**A804_354.0 S3 ME3SA4**	301	**A804_354.0 P90 BE90S4**	302
4.1	2313	1.2	351.2	30000	**A604_351.2 S3 ME3SA4**	294	**A604_351.2 P90 BE90S4**	295
4.4	2139	0.9	324.7	30000	**A554_324.7 S3 ME3SA4**	290	**A554_324.7 P90 BE90S4**	291
4.4	2135	1.3	324.2	30000	**A604_324.2 S3 ME3SA4**	294	**A604_324.2 P90 BE90S4**	295
4.5	2083	2.4	316.4	50000	**A704_316.4 S3 ME3SA4**	298	**A704_316.4 P90 BE90S4**	299
4.9	1923	2.6	292.0	50000	**A704_292.0 S3 ME3SA4**	298	**A704_292.0 P90 BE90S4**	299
5.0	1886	1.5	286.3	30000	**A604_286.3 S3 ME3SA4**	294	**A604_286.3 P90 BE90S4**	295
5.4	1741	1.6	264.3	30000	**A604_264.3 S3 ME3SA4**	294	**A604_264.3 P90 BE90S4**	295
5.4	1730	1.2	262.6	30000	**A554_262.6 S3 ME3SA4**	290	**A554_262.6 P90 BE90S4**	291
5.5	1718	0.9	260.9	20000	**A504_260.9 S3 ME3SA4**	286	**A504_260.9 P90 BE90S4**	287
6.0	1571	3.2	238.6	50000	**A704_238.6 S3 ME3SA4**	298	**A704_238.6 P90 BE90S4**	299
6.2	1528	1.0	232.0	20000	**A504_232.0 S3 ME3SA4**	286	**A504_232.0 P90 BE90S4**	287
6.3	1489	1.9	226.1	30000	**A604_226.1 S3 ME3SA4**	294	**A604_226.1 P90 BE90S4**	295
6.5	1451	3.4	220.3	50000	**A704_220.3 S3 ME3SA4**	298	**A704_220.3 P90 BE90S4**	299
6.8	1390	1.1	211.0	20000	**A504_211.0 S3 ME3SA4**	286	**A504_211.0 P90 BE90S4**	287
6.9	1375	2.0	208.7	30000	**A604_208.7 S3 ME3SA4**	294	**A604_208.7 P90 BE90S4**	295
6.9	1370	1.4	208.1	30000	**A554_208.1 S3 ME3SA4**	290	**A554_208.1 P90 BE90S4**	291
7.4	1308	1.5	194.2	30000	**A553_194.2 S3 ME3SA4**	290	**A553_194.2 P90 BE90S4**	291
7.5	1283	1.2	190.6	20000	**A503_190.6 S3 ME3SA4**	286	**A503_190.6 P90 BE90S4**	287
7.7	1251	2.2	185.8	30000	**A603_185.8 S3 ME3SA4**	294	**A603_185.8 P90 BE90S4**	295
8.2	1179	1.7	175.0	30000	**A553_175.0 S3 ME3SA4**	290	**A553_175.0 P90 BE90S4**	291
8.2	1167	1.3	173.4	20000	**A503_173.4 S3 ME3SA4**	286	**A503_173.4 P90 BE90S4**	287
8.3	1155	2.4	171.5	30000	**A603_171.5 S3 ME3SA4**	294	**A603_171.5 P90 BE90S4**	295
8.9	1080	1.9	160.4	30000	**A553_160.4 S3 ME3SA4**	290	**A553_160.4 P90 BE90S4**	291
9.2	1051	2.7	156.0	30000	**A603_156.0 S3 ME3SA4**	294	**A603_156.0 P90 BE90S4**	295
9.3	1041	1.4	154.6	20000	**A503_154.6 S3 ME3SA4**	286	**A503_154.6 P90 BE90S4**	287
9.7	989	2.0	146.8	30000	**A553_146.8 S3 ME3SA4**	290	**A553_146.8 P90 BE90S4**	291
9.9	970	2.9	144.0	30000	**A603_144.0 S3 ME3SA4**	294	**A603_144.0 P90 BE90S4**	295
10.2	947	1.6	140.6	20000	**A503_140.6 S3 ME3SA4**	286	**A503_140.6 P90 BE90S4**	287
10.7	898	3.1	133.3	30000	**A603_133.3 S3 ME3SA4**	294	**A603_133.3 P90 BE90S4**	295
10.8	894	2.2	132.7	30000	**A553_132.7 S3 ME3SA4**	290	**A553_132.7 P90 BE90S4**	291
11.0	873	1.7	129.7	20000	**A503_129.7 S3 ME3SA4**	286	**A503_129.7 P90 BE90S4**	287
11.5	834	2.4	123.9	30000	**A553_123.9 S3 ME3SA4**	290	**A553_123.9 P90 BE90S4**	291
11.6	828	3.4	123.0	30000	**A603_123.0 S3 ME3SA4**	294	**A603_123.0 P90 BE90S4**	295
12.1	794	1.9	118.0	20000	**A503_118.0 S3 ME3SA4**	286	**A503_118.0 P90 BE90S4**	287
12.3	780	1.1	115.9	15000	**A413_115.9 S3 ME3SA4**	282	**A413_115.9 P90 BE90S4**	283
13.1	737	2.0	109.4	20000	**A503_109.4 S3 ME3SA4**	286	**A503_109.4 P90 BE90S4**	287
14.1	683	2.9	101.4	30000	**A553_101.4 S3 ME3SA4**	290	**A553_101.4 P90 BE90S4**	291
14.4	670	2.2	99.5	20000	**A503_99.5 S3 ME3SA4**	286	**A503_99.5 P90 BE90S4**	287
15.4	625	1.3	92.8	15000	**A413_92.8 S3 ME3SA4**	282	**A413_92.8 P90 BE90S4**	283
16.0	603	2.5	89.5	20000	**A503_89.5 S3 ME3SA4**	286	**A503_89.5 P90 BE90S4**	287
17.3	574	1.0	82.5	12000	**A352_82.5 S3 ME3SA4**	278	**A352_82.5 P90 BE90S4**	279
17.6	548	2.7	81.5	20000	**A503_81.5 S3 ME3SA4**	286	**A503_81.5 P90 BE90S4**	287
18.0	551	1.5	79.2	15000	**A412_79.2 S3 ME3SA4**	282	**A412_79.2 P90 BE90S4**	283
19.3	517	1.2	74.3	12000	**A352_74.3 S3 ME3SA4**	278	**A352_74.3 P90 BE90S4**	279
20.1	496	1.7	71.3	15000	**A412_71.3 S3 ME3SA4**	282	**A412_71.3 P90 BE90S4**	283
20.4	473	3.2	70.2	20000	**A503_70.2 S3 ME3SA4**	286	**A503_70.2 P90 BE90S4**	287
21.7	458	1.3	65.8	12000	**A352_65.8 S3 ME3SA4**	278	**A352_65.8 P90 BE90S4**	279
22.3	446	1.9	64.2	15000	**A412_64.2 S3 ME3SA4**	282	**A412_64.2 P90 BE90S4**	283
22.4	430	3.5	63.9	20000	**A503_63.9 S3 ME3SA4**	286	**A503_63.9 P90 BE90S4**	287
23.7	420	1.4	60.4	12000	**A352_60.4 S3 ME3SA4**	278	**A352_60.4 P90 BE90S4**	279
24.1	413	1.0	59.4	7420	**A302_59.4 S3 ME3SA4**	274	**A302_59.4 P90 BE90S4**	275
24.3	409	2.1	58.8	15000	**A412_58.8 S3 ME3SA4**	282	**A412_58.8 P90 BE90S4**	283
26.3	378	1.6	54.3	12000	**A352_54.3 S3 ME3SA4**	278	**A352_54.3 P90 BE90S4**	279
26.9	370	2.3	53.1	15000	**A412_53.1 S3 ME3SA4**	282	**A412_53.1 P90 BE90S4**	283
27.1	366	1.1	52.7	7310	**A302_52.7 S3 ME3SA4**	274	**A302_52.7 P90 BE90S4**	275
29.1	341	1.8	49.1	11800	**A352_49.1 S3 ME3SA4**	278	**A352_49.1 P90 BE90S4**	279
29.6	336	1.2	48.3	7220	**A302_48.3 S3 ME3SA4**	274	**A302_48.3 P90 BE90S4**	275
29.6	336	2.5	48.3	15000	**A412_48.3 S3 ME3SA4**	282	**A412_48.3 P90 BE90S4**	283

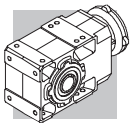

1.1 kW

n_2 min-1	M_2 Nm	S	i	R_{n2} N	IE2		IEC IE2	
31	319	1.9	45.8	11700	**A352_45.8 S3 ME3SA4**	278	**A352_45.8 P90 BE90S4**	279
32	313	2.6	45.1	15000	**A412_45.1 S3 ME3SA4**	282	**A412_45.1 P90 BE90S4**	283
33	302	1.4	43.4	7100	**A302_43.4 S3 ME3SA4**	274	**A302_43.4 P90 BE90S4**	275
34	291	2.1	41.8	11400	**A352_41.8 S3 ME3SA4**	278	**A352_41.8 P90 BE90S4**	279
36	276	0.9	39.6	4500	**A202_39.6 S3 ME3SA4**	270	**A202_39.6 P90 BE90S4**	271
36	273	1.5	39.3	6970	**A302_39.3 S3 ME3SA4**	274	**A302_39.3 P90 BE90S4**	275
39	255	1.6	36.6	6880	**A302_36.6 S3 ME3SA4**	274	**A302_36.6 P90 BE90S4**	275
39	255	2.4	36.6	11100	**A352_36.6 S3 ME3SA4**	278	**A352_36.6 P90 BE90S4**	279
40	250	3.1	35.9	14300	**A412_35.9 S3 ME3SA4**	282	**A412_35.9 P90 BE90S4**	283
40	246	1.0	35.4	4380	**A202_35.4 S3 ME3SA4**	270	**A202_35.4 P90 BE90S4**	271
43	233	1.8	33.4	6760	**A302_33.4 S3 ME3SA4**	274	**A302_33.4 P90 BE90S4**	275
43	231	2.6	33.2	10800	**A352_33.2 S3 ME3SA4**	278	**A352_33.2 P90 BE90S4**	279
46	218	1.1	31.3	4320	**A202_31.3 S3 ME3SA4**	270	**A202_31.3 P90 BE90S4**	271
49	204	2.0	29.3	6580	**A302_29.3 S3 ME3SA4**	274	**A302_29.3 P90 BE90S4**	275
49	203	1.2	29.2	4290	**A202_29.2 S3 ME3SA4**	270	**A202_29.2 P90 BE90S4**	271
50	198	3.0	28.4	10400	**A352_28.4 S3 ME3SA4**	278	**A352_28.4 P90 BE90S4**	279
54	185	2.2	26.5	6440	**A302_26.5 S3 ME3SA4**	274	**A302_26.5 P90 BE90S4**	275
54	184	1.4	26.5	4230	**A202_26.5 S3 ME3SA4**	270	**A202_26.5 P90 BE90S4**	271
56	179	3.4	25.7	10100	**A352_25.7 S3 ME3SA4**	278	**A352_25.7 P90 BE90S4**	279
60	165	0.9	23.8	3640	**A102_23.8 S3 ME3SA4**	266	**A102_23.8 P90 BE90S4**	267
62	161	1.6	23.1	4140	**A202_23.1 S3 ME3SA4**	270	**A202_23.1 P90 BE90S4**	271
63	158	2.6	22.8	6220	**A302_22.8 S3 ME3SA4**	274	**A302_22.8 P90 BE90S4**	275
67	149	1.0	21.4	4280	**A102_21.4 S3 ME3SA4**	266	**A102_21.4 P90 BE90S4**	267
67	148	1.7	21.2	4080	**A202_21.2 S3 ME3SA4**	270	**A202_21.2 P90 BE90S4**	271
70	143	2.9	20.5	6070	**A302_20.5 S3 ME3SA4**	274	**A302_20.5 P90 BE90S4**	275
77	129	1.2	18.6	3540	**A102_18.6 S3 ME3SA4**	266	**A102_18.6 P90 BE90S4**	267
79	126	2.0	18.1	3970	**A202_18.1 S3 ME3SA4**	270	**A202_18.1 P90 BE90S4**	271
80	125	3.2	18.0	5880	**A302_18.0 S3 ME3SA4**	274	**A302_18.0 P90 BE90S4**	275
87	114	1.3	16.4	4130	**A102_16.4 S3 ME3SA4**	266	**A102_16.4 P90 BE90S4**	267
88	114	3.4	16.3	5740	**A302_16.3 S3 ME3SA4**	274	**A302_16.3 P90 BE90S4**	275
88	112	2.2	16.2	3880	**A202_16.2 S3 ME3SA4**	270	**A202_16.2 P90 BE90S4**	271
102	98	2.5	14.1	3770	**A202_14.1 S3 ME3SA4**	270	**A202_14.1 P90 BE90S4**	271
103	97	1.5	13.9	3380	**A102_13.9 S3 ME3SA4**	266	**A102_13.9 P90 BE90S4**	267
116	86	1.6	12.3	3300	**A102_12.3 S3 ME3SA4**	266	**A102_12.3 P90 BE90S4**	267
120	83	2.5	12.0	3620	**A202_12.0 S3 ME3SA4**	270	**A202_12.0 P90 BE90S4**	271
135	73	2.0	10.6	3210	**A102_10.6 S3 ME3SA4**	266	**A102_10.6 P90 BE90S4**	267
138	72	3.1	10.3	3510	**A202_10.3 S3 ME3SA4**	270	**A202_10.3 P90 BE90S4**	271
149	67	2.1	9.6	3140	**A102_9.6 S3 ME3SA4**	266	**A102_9.6 P90 BE90S4**	267
153	65	3.2	9.4	3420	**A202_9.4 S3 ME3SA4**	270	**A202_9.4 P90 BE90S4**	271
168	59	2.4	8.5	3630	**A102_8.5 S3 ME3SA4**	266	**A102_8.5 P90 BE90S4**	267
198	50	2.8	7.2	2940	**A102_7.2 S3 ME3SA4**	266	**A102_7.2 P90 BE90S4**	267
226	44	3.2	6.3	3390	**A102_6.3 S3 ME3SA4**	266	**A102_6.3 P90 BE90S4**	267
230	43	3.3	12.3	2830	**A102_12.3 S2 ME2SB2**	266	**A102_12.3 P90 BE90B2**	267
294	34	2.8	9.6	1600	**A052_9.6 S2 ME2SB2**	263	**A052_9.6 P90 BE90B2**	263
332	30	3.0	8.5	1560	**A052_8.5 S2 ME2SB2**	263	**A052_8.5 P90 BE90B2**	263
392	25	3.4	7.2	1500	**A052_7.2 S2 ME2SB2**	263	**A052_7.2 P90 BE90B2**	263
447	22	3.6	6.3	1450	**A052_6.3 S2 ME2SB2**	263	**A052_6.3 P90 BE90B2**	263
518	19.1	3.9	5.5	1400	**A052_5.5 S2 ME2SB2**	263	**A052_5.5 P90 BE90B2**	263

1.5 kW

n_2 min-1	M_2 Nm	S	i	R_{n2} N	IE2		IEC IE2	
0.88	14528	1.0	1632	75000	**A904_1632 S3 ME3SB4**	304	**A904_1632 P90 BE90LA4**	305
0.95	13410	1.0	1507	75000	**A904_1507 S3 ME3SB4**	304	**A904_1507 P90 BE90LA4**	305
1.1	11784	1.2	1324	75000	**A904_1324 S3 ME3SB4**	304	**A904_1324 P90 BE90LA4**	305
1.2	10877	1.3	1222	75000	**A904_1222 S3 ME3SB4**	304	**A904_1222 P90 BE90LA4**	305
1.3	9884	1.4	1111	75000	**A904_1111 S3 ME3SB4**	304	**A904_1111 P90 BE90LA4**	305
1.4	9124	1.5	1025	75000	**A904_1025 S3 ME3SB4**	304	**A904_1025 P90 BE90LA4**	305
1.4	8913	0.9	1001	65000	**A804_1001 S3 ME3SB4**	301	**A804_1001 P90 BE90LA4**	302
1.5	8341	1.7	937.2	75000	**A904_937.2 S3 ME3SB4**	304	**A904_937.2 P90 BE90LA4**	305

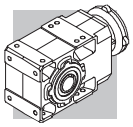

1.5 kW

n_2 min-1	M_2 Nm	S	i	R_{n2} N	IE2		IEC IE2	
1.6	7998	1.0	898.7	65000	**A804_898.7 S3 ME3SB4**	301	**A804_898.7 P90 BE90LA4**	302
1.7	7699	1.8	865.1	75000	**A904_865.1 S3 ME3SB4**	304	**A904_865.1 P90 BE90LA4**	305
1.7	7383	1.1	829.5	65000	**A804_829.5 S3 ME3SB4**	301	**A804_829.5 P90 BE90LA4**	302
1.9	6826	2.1	766.9	75000	**A904_766.9 S3 ME3SB4**	304	**A904_766.9 P90 BE90LA4**	305
1.9	6783	1.2	762.1	65000	**A804_762.1 S3 ME3SB4**	301	**A804_762.1 P90 BE90LA4**	302
2.0	6300	2.2	707.9	75000	**A904_707.9 S3 ME3SB4**	304	**A904_707.9 P90 BE90LA4**	305
2.0	6261	1.3	703.5	65000	**A804_703.5 S3 ME3SB4**	301	**A804_703.5 P90 BE90LA4**	302
2.2	5737	0.9	644.6	50000	**A704_644.6 S3 ME3SB4**	298	**A704_644.6 P90 BE90LA4**	299
2.4	5404	1.5	607.2	65000	**A804_607.2 S3 ME3SB4**	301	**A804_607.2 P90 BE90LA4**	302
2.4	5354	2.6	601.6	75000	**A904_601.6 S3 ME3SB4**	304	**A904_601.6 P90 BE90LA4**	305
2.4	5296	0.9	595.0	50000	**A704_595.0 S3 ME3SB4**	298	**A704_595.0 P90 BE90LA4**	299
2.6	4988	1.6	560.5	65000	**A804_560.5 S3 ME3SB4**	301	**A804_560.5 P90 BE90LA4**	302
2.6	4942	2.8	555.3	75000	**A904_555.3 S3 ME3SB4**	304	**A904_555.3 P90 BE90LA4**	305
2.8	4587	1.1	515.4	50000	**A704_515.4 S3 ME3SB4**	298	**A704_515.4 P90 BE90LA4**	299
2.9	4331	3.2	486.6	75000	**A904_486.6 S3 ME3SB4**	304	**A904_486.6 P90 BE90LA4**	305
3.0	4262	1.9	478.9	65000	**A804_478.9 S3 ME3SB4**	301	**A804_478.9 P90 BE90LA4**	302
3.0	4234	1.2	475.8	50000	**A704_475.8 S3 ME3SB4**	298	**A704_475.8 P90 BE90LA4**	299
3.2	3998	3.5	449.2	75000	**A904_449.2 S3 ME3SB4**	304	**A904_449.2 P90 BE90LA4**	305
3.2	3935	2.0	442.1	65000	**A804_442.1 S3 ME3SB4**	301	**A804_442.1 P90 BE90LA4**	302
3.6	3561	1.4	400.2	50000	**A704_400.2 S3 ME3SB4**	298	**A704_400.2 P90 BE90LA4**	299
3.7	3413	2.3	383.5	65000	**A804_383.5 S3 ME3SB4**	301	**A804_383.5 P90 BE90LA4**	302
3.9	3288	1.5	369.4	50000	**A704_369.4 S3 ME3SB4**	298	**A704_369.4 P90 BE90LA4**	299
4.0	3150	2.5	354.0	65000	**A804_354.0 S3 ME3SB4**	301	**A804_354.0 P90 BE90LA4**	302
4.1	3126	0.9	351.2	30000	**A604_351.2 S3 ME3SB4**	294	**A604_351.2 P90 BE90LA4**	295
4.4	2885	1.0	324.2	30000	**A604_324.2 S3 ME3SB4**	294	**A604_324.2 P90 BE90LA4**	295
4.5	2816	1.8	316.4	50000	**A704_316.4 S3 ME3SB4**	298	**A704_316.4 P90 BE90LA4**	299
4.8	2673	3.0	300.4	65000	**A804_300.4 S3 ME3SB4**	301	**A804_300.4 P90 BE90LA4**	302
4.9	2599	1.9	292.0	50000	**A704_292.0 S3 ME3SB4**	298	**A704_292.0 P90 BE90LA4**	299
5.0	2548	1.1	286.3	30000	**A604_286.3 S3 ME3SB4**	294	**A604_286.3 P90 BE90LA4**	295
5.2	2468	3.2	277.3	65000	**A804_277.3 S3 ME3SB4**	301	**A804_277.3 P90 BE90LA4**	302
5.4	2352	1.2	264.3	30000	**A604_264.3 S3 ME3SB4**	294	**A604_264.3 P90 BE90LA4**	295
6.0	2124	2.4	238.6	50000	**A704_238.6 S3 ME3SB4**	298	**A704_238.6 P90 BE90LA4**	299
6.3	2013	1.4	226.1	30000	**A604_226.1 S3 ME3SB4**	294	**A604_226.1 P90 BE90LA4**	295
6.5	1960	2.6	220.3	50000	**A704_220.3 S3 ME3SB4**	298	**A704_220.3 P90 BE90LA4**	299
6.9	1858	1.5	208.7	30000	**A604_208.7 S3 ME3SB4**	294	**A604_208.7 P90 BE90LA4**	295
6.9	1852	1.1	208.1	30000	**A554_208.1 S3 ME3SB4**	290	**A554_208.1 P90 BE90LA4**	291
7.4	1767	1.1	194.2	30000	**A553_194.2 S3 ME3SB4**	290	**A553_194.2 P90 BE90LA4**	291
7.7	1690	1.7	185.8	30000	**A603_185.8 S3 ME3SB4**	294	**A603_185.8 P90 BE90LA4**	295
7.8	1637	3.1	183.9	50000	**A704_183.9 S3 ME3SB4**	298	**A704_183.9 P90 BE90LA4**	299
8.2	1593	1.3	175.0	30000	**A553_175.0 S3 ME3SB4**	290	**A553_175.0 P90 BE90LA4**	291
8.2	1578	1.0	173.4	20000	**A503_173.4 S3 ME3SB4**	286	**A503_173.4 P90 BE90LA4**	287
8.3	1560	1.8	171.5	30000	**A603_171.5 S3 ME3SB4**	294	**A603_171.5 P90 BE90LA4**	295
8.4	1511	3.3	169.8	50000	**A704_169.8 S3 ME3SB4**	298	**A704_169.8 P90 BE90LA4**	299
8.9	1460	1.4	160.4	30000	**A553_160.4 S3 ME3SB4**	290	**A553_160.4 P90 BE90LA4**	291
9.2	1420	2.0	156.0	30000	**A603_156.0 S3 ME3SB4**	294	**A603_156.0 P90 BE90LA4**	295
9.3	1407	1.1	154.6	20000	**A503_154.6 S3 ME3SB4**	286	**A503_154.6 P90 BE90LA4**	287
9.3	1399	2.9	153.7	50000	**A703_153.7 S3 ME3SB4**	298	**A703_153.7 P90 BE90LA4**	299
9.7	1336	1.5	146.8	30000	**A553_146.8 S3 ME3SB4**	290	**A553_146.8 P90 BE90LA4**	291
9.9	1311	2.1	144.0	30000	**A603_144.0 S3 ME3SB4**	294	**A603_144.0 P90 BE90LA4**	295
10.2	1280	1.2	140.6	20000	**A503_140.6 S3 ME3SB4**	286	**A503_140.6 P90 BE90LA4**	287
10.7	1213	2.3	133.3	30000	**A603_133.3 S3 ME3SB4**	294	**A603_133.3 P90 BE90LA4**	295
10.8	1208	1.7	132.7	30000	**A553_132.7 S3 ME3SB4**	290	**A553_132.7 P90 BE90LA4**	291
11.0	1180	1.3	129.7	20000	**A503_129.7 S3 ME3SB4**	286	**A503_129.7 P90 BE90LA4**	287
11.5	1127	1.8	123.9	30000	**A553_123.9 S3 ME3SB4**	290	**A553_123.9 P90 BE90LA4**	291
11.6	1120	2.5	123.0	30000	**A603_123.0 S3 ME3SB4**	294	**A603_123.0 P90 BE90LA4**	295
12.1	1073	1.4	118.0	20000	**A503_118.0 S3 ME3SB4**	286	**A503_118.0 P90 BE90LA4**	287
13.1	996	1.5	109.4	20000	**A503_109.4 S3 ME3SB4**	286	**A503_109.4 P90 BE90LA4**	287
13.3	981	2.9	107.8	30000	**A603_107.8 S3 ME3SB4**	294	**A603_107.8 P90 BE90LA4**	295
14.1	923	2.2	101.4	30000	**A553_101.4 S3 ME3SB4**	290	**A553_101.4 P90 BE90LA4**	291
14.4	906	1.7	99.5	20000	**A503_99.5 S3 ME3SB4**	286	**A503_99.5 P90 BE90LA4**	287
14.4	906	3.1	99.5	30000	**A603_99.5 S3 ME3SB4**	294	**A603_99.5 P90 BE90LA4**	295
15.4	844	0.9	92.8	15000	**A413_92.8 S3 ME3SB4**	282	**A413_92.8 P90 BE90LA4**	283
16.0	815	1.8	89.5	20000	**A503_89.5 S3 ME3SB4**	286	**A503_89.5 P90 BE90LA4**	287
16.6	786	3.6	86.4	30000	**A603_86.4 S3 ME3SB4**	294	**A603_86.4 P90 BE90LA4**	295
17.6	741	2.0	81.5	20000	**A503_81.5 S3 ME3SB4**	286	**A503_81.5 P90 BE90LA4**	287
18.0	724	2.8	79.5	30000	**A553_79.5 S3 ME3SB4**	290	**A553_79.5 P90 BE90LA4**	291
18.0	745	1.1	79.2	15000	**A412_79.2 S3 ME3SB4**	282	**A412_79.2 P90 BE90LA4**	283

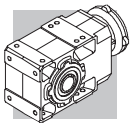

1.5 kW

n_2 min-1	M_2 Nm	S	i	R_{n2} N	IE2		IEC IE2	
20.1	670	1.3	71.3	15000	**A412_71.3 S3 ME3SB4**	282	**A412_71.3 P90 BE90LA4**	283
20.4	639	2.3	70.2	20000	**A503_70.2 S3 ME3SB4**	286	**A503_70.2 P90 BE90LA4**	287
21.7	619	1.0	65.8	11600	**A352_65.8 S3 ME3SB4**	278	**A352_65.8 P90 BE90LA4**	279
22.2	585	3.4	64.3	30000	**A553_64.3 S3 ME3SB4**	290	**A553_64.3 P90 BE90LA4**	291
22.3	603	1.4	64.2	15000	**A412_64.2 S3 ME3SB4**	282	**A412_64.2 P90 BE90LA4**	283
22.4	581	2.6	63.9	20000	**A503_63.9 S3 ME3SB4**	286	**A503_63.9 P90 BE90LA4**	287
23.7	567	1.1	60.4	11500	**A352_60.4 S3 ME3SB4**	278	**A352_60.4 P90 BE90LA4**	279
24.3	553	1.5	58.8	15000	**A412_58.8 S3 ME3SB4**	282	**A412_58.8 P90 BE90LA4**	283
25.2	517	2.9	56.8	20000	**A503_56.8 S3 ME3SB4**	286	**A503_56.8 P90 BE90LA4**	287
26.3	510	1.2	54.3	11300	**A352_54.3 S3 ME3SB4**	278	**A352_54.3 P90 BE90LA4**	279
26.9	500	1.7	53.1	15000	**A412_53.1 S3 ME3SB4**	282	**A412_53.1 P90 BE90LA4**	283
27.7	470	3.2	51.7	19700	**A503_51.7 S3 ME3SB4**	286	**A503_51.7 P90 BE90LA4**	287
29.1	461	1.3	49.1	11100	**A352_49.1 S3 ME3SB4**	278	**A352_49.1 P90 BE90LA4**	279
29.6	454	0.9	48.3	6680	**A302_48.3 S3 ME3SB4**	274	**A302_48.3 P90 BE90LA4**	275
29.6	454	1.9	48.3	14900	**A412_48.3 S3 ME3SB4**	282	**A412_48.3 P90 BE90LA4**	283
31	431	1.4	45.8	11000	**A352_45.8 S3 ME3SB4**	278	**A352_45.8 P90 BE90LA4**	279
32	424	2.0	45.1	14600	**A412_45.1 S3 ME3SB4**	282	**A412_45.1 P90 BE90LA4**	283
33	408	1.0	43.4	6450	**A302_43.4 S3 ME3SB4**	274	**A302_43.4 P90 BE90LA4**	275
34	393	1.5	41.8	10800	**A352_41.8 S3 ME3SB4**	278	**A352_41.8 P90 BE90LA4**	279
36	369	1.1	39.3	6380	**A302_39.3 S3 ME3SB4**	274	**A302_39.3 P90 BE90LA4**	275
39	344	1.2	36.6	6330	**A302_36.6 S3 ME3SB4**	274	**A302_36.6 P90 BE90LA4**	275
39	344	1.7	36.6	10500	**A352_36.6 S3 ME3SB4**	278	**A352_36.6 P90 BE90LA4**	279
40	338	2.3	35.9	13800	**A412_35.9 S3 ME3SB4**	282	**A412_35.9 P90 BE90LA4**	283
43	314	1.3	33.4	6260	**A302_33.4 S3 ME3SB4**	274	**A302_33.4 P90 BE90LA4**	275
43	312	1.9	33.2	10300	**A352_33.2 S3 ME3SB4**	278	**A352_33.2 P90 BE90LA4**	279
49	275	1.5	29.3	6140	**A302_29.3 S3 ME3SB4**	274	**A302_29.3 P90 BE90LA4**	275
49	275	0.9	29.2	3820	**A202_29.2 S3 ME3SB4**	270	**A202_29.2 P90 BE90LA4**	271
50	267	2.2	28.4	9940	**A352_28.4 S3 ME3SB4**	278	**A352_28.4 P90 BE90LA4**	279
50	266	2.7	28.3	13000	**A412_28.3 S3 ME3SB4**	282	**A412_28.3 P90 BE90LA4**	283
54	249	1.6	26.5	6040	**A302_26.5 S3 ME3SB4**	274	**A302_26.5 P90 BE90LA4**	275
54	249	1.0	26.5	3790	**A202_26.5 S3 ME3SB4**	270	**A202_26.5 P90 BE90LA4**	271
56	241	2.5	25.7	9710	**A352_25.7 S3 ME3SB4**	278	**A352_25.7 P90 BE90LA4**	279
62	217	1.2	23.1	3760	**A202_23.1 S3 ME3SB4**	270	**A202_23.1 P90 BE90LA4**	271
63	214	1.9	22.8	5870	**A302_22.8 S3 ME3SB4**	274	**A302_22.8 P90 BE90LA4**	275
63	213	3.2	22.7	12200	**A412_22.7 S3 ME3SB4**	282	**A412_22.7 P90 BE90LA4**	283
64	211	2.8	22.5	9400	**A352_22.5 S3 ME3SB4**	278	**A352_22.5 P90 BE90LA4**	279
67	200	1.3	21.2	3730	**A202_21.2 S3 ME3SB4**	270	**A202_21.2 P90 BE90LA4**	271
70	193	2.1	20.5	5760	**A302_20.5 S3 ME3SB4**	274	**A302_20.5 P90 BE90LA4**	275
70	192	3.1	20.4	9170	**A352_20.4 S3 ME3SB4**	278	**A352_20.4 P90 BE90LA4**	279
79	170	1.5	18.1	3660	**A202_18.1 S3 ME3SB4**	270	**A202_18.1 P90 BE90LA4**	271
80	169	2.4	18.0	5600	**A302_18.0 S3 ME3SB4**	274	**A302_18.0 P90 BE90LA4**	275
87	155	1.0	16.4	3720	**A102_16.4 S3 ME3SB4**	266	**A102_16.4 P90 BE90LA4**	267
88	154	2.5	16.3	5480	**A302_16.3 S3 ME3SB4**	274	**A302_16.3 P90 BE90LA4**	275
88	152	1.6	16.2	3600	**A202_16.2 S3 ME3SB4**	270	**A202_16.2 P90 BE90LA4**	271
102	132	1.9	14.1	3530	**A202_14.1 S3 ME3SB4**	270	**A202_14.1 P90 BE90LA4**	271
103	131	1.1	13.9	3090	**A102_13.9 S3 ME3SB4**	266	**A102_13.9 P90 BE90LA4**	267
105	128	2.9	13.6	5250	**A302_13.6 S3 ME3SB4**	274	**A302_13.6 P90 BE90LA4**	275
116	116	1.2	12.3	3040	**A102_12.3 S3 ME3SB4**	266	**A102_12.3 P90 BE90LA4**	267
120	112	1.9	12.0	3420	**A202_12.0 S3 ME3SB4**	270	**A202_12.0 P90 BE90LA4**	271
121	111	2.7	11.8	5060	**A302_11.8 S3 ME3SB4**	274	**A302_11.8 P90 BE90LA4**	275
125	107	3.3	22.8	5040	**A302_22.8 S3 ME3SA2**	274	**A302_22.8 P90 BE90SA2**	275
135	99	1.5	10.6	2990	**A102_10.6 S3 ME3SB4**	266	**A102_10.6 P90 BE90LA4**	267
137	98	3.5	10.5	4930	**A302_10.5 S3 ME3SB4**	274	**A302_10.5 P90 BE90LA4**	275
138	97	2.3	10.3	3330	**A202_10.3 S3 ME3SB4**	270	**A202_10.3 P90 BE90LA4**	271
149	90	1.5	9.6	2940	**A102_9.6 S3 ME3SB4**	266	**A102_9.6 P90 BE90LA4**	267
153	88	2.4	9.4	3250	**A202_9.4 S3 ME3SB4**	270	**A202_9.4 P90 BE90LA4**	271
154	88	3.4	9.3	4770	**A302_9.3 S3 ME3SB4**	274	**A302_9.3 P90 BE90LA4**	275
168	80	1.7	8.5	3420	**A102_8.5 S3 ME3SB4**	266	**A102_8.5 P90 BE90LA4**	267
171	79	2.7	8.4	3180	**A202_8.4 S3 ME3SB4**	270	**A202_8.4 P90 BE90LA4**	271
196	69	3.1	7.3	3080	**A202_7.3 S3 ME3SB4**	270	**A202_7.3 P90 BE90LA4**	271
198	68	2.1	7.2	2790	**A102_7.2 S3 ME3SB4**	266	**A102_7.2 P90 BE90LA4**	267
219	61	3.4	6.5	3000	**A202_6.5 S3 ME3SB4**	270	**A202_6.5 P90 BE90LA4**	271
226	60	2.4	6.3	3220	**A102_6.3 S3 ME3SB4**	266	**A102_6.3 P90 BE90LA4**	267
262	51	2.7	5.5	2630	**A102_5.5 S3 ME3SB4**	266	**A102_5.5 P90 BE90LA4**	267
297	45	3.1	9.6	2560	**A102_9.6 S3 ME3SA2**	266	**A102_9.6 P90 BE90SA2**	267
335	40	3.5	8.5	2950	**A102_8.5 S3 ME3SA2**	266	**A102_8.5 P90 BE90SA2**	267

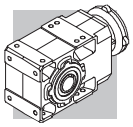

2.2 kW

n_2 min-1	M_2 Nm	S	i	R_{n2} N	IE2		IEC IE2	
1.2	15990	0.9	1222	75000	A904_1222 S3 ME3LA4	304	A904_1222 P100 BE100LA4	305
1.3	14530	1.0	1111	75000	A904_1111 S3 ME3LA4	304	A904_1111 P100 BE100LA4	305
1.4	13412	1.0	1025	75000	A904_1025 S3 ME3LA4	304	A904_1025 P100 BE100LA4	305
1.5	12261	1.1	937.2	75000	A904_937.2 S3 ME3LA4	304	A904_937.2 P100 BE100LA4	305
1.7	11318	1.2	865.1	75000	A904_865.1 S3 ME3LA4	304	A904_865.1 P100 BE100LA4	305
1.9	10034	1.4	766.9	75000	A904_766.9 S3 ME3LA4	304	A904_766.9 P100 BE100LA4	305
2.0	9262	1.5	707.9	75000	A904_707.9 S3 ME3LA4	304	A904_707.9 P100 BE100LA4	305
2.0	9203	0.9	703.5	65000	A804_703.5 S3 ME3LA4	301	A804_703.5 P100 BE100LA4	302
2.4	7943	1.0	607.2	65000	A804_607.2 S3 ME3LA4	301	A804_607.2 P100 BE100LA4	302
2.4	7870	1.8	601.6	75000	A904_601.6 S3 ME3LA4	304	A904_601.6 P100 BE100LA4	305
2.6	7332	1.1	560.5	65000	A804_560.5 S3 ME3LA4	301	A804_560.5 P100 BE100LA4	302
2.6	7265	1.9	555.3	75000	A904_555.3 S3 ME3LA4	304	A904_555.3 P100 BE100LA4	305
2.9	6366	2.2	486.6	75000	A904_486.6 S3 ME3LA4	304	A904_486.6 P100 BE100LA4	305
3.0	6266	1.3	478.9	65000	A804_478.9 S3 ME3LA4	301	A804_478.9 P100 BE100LA4	302
3.2	5876	2.4	449.2	75000	A904_449.2 S3 ME3LA4	304	A904_449.2 P100 BE100LA4	305
3.2	5784	1.4	442.1	65000	A804_442.1 S3 ME3LA4	301	A804_442.1 P100 BE100LA4	302
3.6	5235	1.0	400.2	50000	A704_400.2 S3 ME3LA4	298	A704_400.2 P100 BE100LA4	299
3.7	5043	2.8	385.4	75000	A904_385.4 S3 ME3LA4	304	A904_385.4 P100 BE100LA4	305
3.7	5017	1.6	383.5	65000	A804_383.5 S3 ME3LA4	301	A804_383.5 P100 BE100LA4	302
3.9	4833	1.0	369.4	50000	A704_369.4 S3 ME3LA4	298	A704_369.4 P100 BE100LA4	299
4.0	4655	3.0	355.8	75000	A904_355.8 S3 ME3LA4	304	A904_355.8 P100 BE100LA4	305
4.0	4631	1.7	354.0	65000	A804_354.0 S3 ME3LA4	301	A804_354.0 P100 BE100LA4	302
4.5	4139	1.2	316.4	50000	A704_316.4 S3 ME3LA4	298	A704_316.4 P100 BE100LA4	299
4.7	3989	3.5	304.9	75000	A904_304.9 S3 ME3LA4	304	A904_304.9 P100 BE100LA4	305
4.8	3930	2.0	300.4	65000	A804_300.4 S3 ME3LA4	301	A804_300.4 P100 BE100LA4	302
4.9	3820	1.3	292.0	50000	A704_292.0 S3 ME3LA4	298	A704_292.0 P100 BE100LA4	299
5.2	3628	2.2	277.3	65000	A804_277.3 S3 ME3LA4	301	A804_277.3 P100 BE100LA4	302
6.0	3122	1.6	238.6	50000	A704_238.6 S3 ME3LA4	298	A704_238.6 P100 BE100LA4	299
6.1	3043	2.6	232.6	65000	A804_232.6 S3 ME3LA4	301	A804_232.6 P100 BE100LA4	302
6.3	2958	0.9	226.1	30000	A604_226.1 S3 ME3LA4	294	A604_226.1 P100 BE100LA4	295
6.5	2882	1.7	220.3	50000	A704_220.3 S3 ME3LA4	298	A704_220.3 P100 BE100LA4	299
6.7	2809	2.8	214.7	65000	A804_214.7 S3 ME3LA4	301	A804_214.7 P100 BE100LA4	302
6.9	2731	1.0	208.7	30000	A604_208.7 S3 ME3LA4	294	A604_208.7 P100 BE100LA4	295
7.7	2485	1.1	185.8	30000	A603_185.8 S3 ME3LA4	294	A603_185.8 P100 BE100LA4	295
7.8	2406	2.1	183.9	50000	A704_183.9 S3 ME3LA4	298	A704_183.9 P100 BE100LA4	299
8.3	2294	1.2	171.5	30000	A603_171.5 S3 ME3LA4	294	A603_171.5 P100 BE100LA4	295
8.3	2241	3.6	171.3	65000	A804_171.3 S3 ME3LA4	301	A804_171.3 P100 BE100LA4	302
8.4	2221	2.3	169.8	50000	A704_169.8 S3 ME3LA4	298	A704_169.8 P100 BE100LA4	299
8.9	2146	0.9	160.4	30000	A553_160.4 S3 ME3LA4	290	A553_160.4 P100 BE100LA4	291
9.2	2087	1.3	156.0	30000	A603_156.0 S3 ME3LA4	294	A603_156.0 P100 BE100LA4	295
9.3	2056	2.0	153.7	50000	A703_153.7 S3 ME3LA4	298	A703_153.7 P100 BE100LA4	299
9.7	1964	1.0	146.8	30000	A553_146.8 S3 ME3LA4	290	A553_146.8 P100 BE100LA4	291
9.9	1927	1.5	144.0	30000	A603_144.0 S3 ME3LA4	294	A603_144.0 P100 BE100LA4	295
10.1	1898	2.6	141.9	50000	A703_141.9 S3 ME3LA4	298	A703_141.9 P100 BE100LA4	299
10.7	1783	1.6	133.3	30000	A603_133.3 S3 ME3LA4	294	A603_133.3 P100 BE100LA4	295
10.8	1776	1.1	132.7	30000	A553_132.7 S3 ME3LA4	290	A553_132.7 P100 BE100LA4	291
10.9	1748	2.9	130.7	50000	A703_130.7 S3 ME3LA4	298	A703_130.7 P100 BE100LA4	299
11.5	1657	1.2	123.9	30000	A553_123.9 S3 ME3LA4	290	A553_123.9 P100 BE100LA4	291
11.6	1646	1.7	123.0	30000	A603_123.0 S3 ME3LA4	294	A603_123.0 P100 BE100LA4	295
11.9	1613	3.1	120.6	50000	A703_120.6 S3 ME3LA4	298	A703_120.6 P100 BE100LA4	299
12.1	1578	1.0	118.0	20000	A503_118.0 S3 ME3LA4	286	A503_118.0 P100 BE100LA4	287
13.1	1464	1.0	109.4	20000	A503_109.4 S3 ME3LA4	286	A503_109.4 P100 BE100LA4	287
13.3	1442	1.9	107.8	30000	A603_107.8 S3 ME3LA4	294	A603_107.8 P100 BE100LA4	295
13.7	1394	3.6	104.2	50000	A703_104.2 S3 ME3LA4	298	A703_104.2 P100 BE100LA4	299
14.1	1356	1.5	101.4	30000	A553_101.4 S3 ME3LA4	290	A553_101.4 P100 BE100LA4	291
14.4	1331	1.1	99.5	20000	A503_99.5 S3 ME3LA4	286	A503_99.5 P100 BE100LA4	287
14.4	1331	2.1	99.5	30000	A603_99.5 S3 ME3LA4	294	A603_99.5 P100 BE100LA4	295

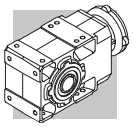

2.2 kW

n_2 min-1	M_2 Nm	S	i	R_{n2} N	IE2		IEC IE2	
16.0	1198	1.3	89.5	19800	**A503_89.5 S3 ME3LA4**	286	**A503_89.5 P100 BE100LA4**	287
16.6	1155	2.4	86.4	30000	**A603_86.4 S3 ME3LA4**	294	**A603_86.4 P100 BE100LA4**	295
17.6	1090	1.4	81.5	19600	**A503_81.5 S3 ME3LA4**	286	**A503_81.5 P100 BE100LA4**	287
17.9	1066	2.6	79.7	30000	**A603_79.7 S3 ME3LA4**	294	**A603_79.7 P100 BE100LA4**	295
18.0	1064	1.9	79.5	30000	**A553_79.5 S3 ME3LA4**	290	**A553_79.5 P100 BE100LA4**	291
20.3	942	3.0	70.4	30000	**A603_70.4 S3 ME3LA4**	294	**A603_70.4 P100 BE100LA4**	295
20.4	940	1.6	70.2	19300	**A503_70.2 S3 ME3LA4**	286	**A503_70.2 P100 BE100LA4**	287
22.0	869	3.2	65.0	30000	**A603_65.0 S3 ME3LA4**	294	**A603_65.0 P100 BE100LA4**	295
22.2	860	2.3	64.3	30000	**A553_64.3 S3 ME3LA4**	290	**A553_64.3 P100 BE100LA4**	291
22.3	887	1.0	64.2	14500	**A412_64.2 S3 ME3LA4**	282	**A412_64.2 P100 BE100LA4**	283
22.4	855	1.8	63.9	19000	**A503_63.9 S3 ME3LA4**	286	**A503_63.9 P100 BE100LA4**	287
24.3	813	1.0	58.8	14400	**A412_58.8 S3 ME3LA4**	282	**A412_58.8 P100 BE100LA4**	283
25.2	760	2.0	56.8	18600	**A503_56.8 S3 ME3LA4**	286	**A503_56.8 P100 BE100LA4**	287
26.9	734	1.2	53.1	14100	**A412_53.1 S3 ME3LA4**	282	**A412_53.1 P100 BE100LA4**	283
27.7	691	2.2	51.7	18300	**A503_51.7 S3 ME3LA4**	286	**A503_51.7 P100 BE100LA4**	287
28.1	682	2.9	51.0	30000	**A553_51.0 S3 ME3LA4**	290	**A553_51.0 P100 BE100LA4**	291
29.1	678	0.9	49.1	9900	**A352_49.1 S3 ME3LA4**	278	**A352_49.1 P100 BE100LA4**	279
29.6	667	1.3	48.3	13900	**A412_48.3 S3 ME3LA4**	282	**A412_48.3 P100 BE100LA4**	283
31	633	0.9	45.8	9840	**A352_45.8 S3 ME3LA4**	278	**A352_45.8 P100 BE100LA4**	279
32	623	1.3	45.1	13700	**A412_45.1 S3 ME3LA4**	282	**A412_45.1 P100 BE100LA4**	283
32	602	2.5	45.0	17900	**A503_45.0 S3 ME3LA4**	286	**A503_45.0 P100 BE100LA4**	287
34	577	1.0	41.8	9750	**A352_41.8 S3 ME3LA4**	278	**A352_41.8 P100 BE100LA4**	279
35	548	2.7	40.9	17500	**A503_40.9 S3 ME3LA4**	286	**A503_40.9 P100 BE100LA4**	287
39	506	1.2	36.6	9600	**A352_36.6 S3 ME3LA4**	278	**A352_36.6 P100 BE100LA4**	279
40	496	1.6	35.9	13100	**A412_35.9 S3 ME3LA4**	282	**A412_35.9 P100 BE100LA4**	283
40	476	3.1	35.6	17000	**A503_35.6 S3 ME3LA4**	286	**A503_35.6 P100 BE100LA4**	287
43	462	0.9	33.4	5050	**A302_33.4 S3 ME3LA4**	274	**A302_33.4 P100 BE100LA4**	275
43	458	1.3	33.2	9460	**A352_33.2 S3 ME3LA4**	278	**A352_33.2 P100 BE100LA4**	279
44	433	3.5	32.4	16600	**A503_32.4 S3 ME3LA4**	286	**A503_32.4 P100 BE100LA4**	287
49	405	1.0	29.3	5380	**A302_29.3 S3 ME3LA4**	274	**A302_29.3 P100 BE100LA4**	275
50	393	1.5	28.4	9230	**A352_28.4 S3 ME3LA4**	278	**A352_28.4 P100 BE100LA4**	279
50	391	1.9	28.3	12400	**A412_28.3 S3 ME3LA4**	282	**A412_28.3 P100 BE100LA4**	283
54	367	1.1	26.5	5350	**A302_26.5 S3 ME3LA4**	274	**A302_26.5 P100 BE100LA4**	275
56	355	1.7	25.7	9070	**A352_25.7 S3 ME3LA4**	278	**A352_25.7 P100 BE100LA4**	279
63	314	1.3	22.8	5290	**A302_22.8 S3 ME3LA4**	274	**A302_22.8 P100 BE100LA4**	275
63	313	2.2	22.7	11700	**A412_22.7 S3 ME3LA4**	282	**A412_22.7 P100 BE100LA4**	283
64	311	1.9	22.5	8840	**A352_22.5 S3 ME3LA4**	278	**A352_22.5 P100 BE100LA4**	279
70	284	1.4	20.5	5230	**A302_20.5 S3 ME3LA4**	274	**A302_20.5 P100 BE100LA4**	275
70	282	2.1	20.4	8660	**A352_20.4 S3 ME3LA4**	278	**A352_20.4 P100 BE100LA4**	279
79	250	1.0	18.1	3140	**A202_18.1 S3 ME3LA4**	270	**A202_18.1 P100 BE100LA4**	271
80	249	1.6	18.0	5140	**A302_18.0 S3 ME3LA4**	274	**A302_18.0 P100 BE100LA4**	275
81	245	2.6	17.8	11000	**A412_17.8 S3 ME3LA4**	282	**A412_17.8 P100 BE100LA4**	283
84	234	2.6	17.0	8320	**A352_17.0 S3 ME3LA4**	278	**A352_17.0 P100 BE100LA4**	279
88	226	1.7	16.3	5060	**A302_16.3 S3 ME3LA4**	274	**A302_16.3 P100 BE100LA4**	275
88	223	1.1	16.2	3140	**A202_16.2 S3 ME3LA4**	270	**A202_16.2 P100 BE100LA4**	271
89	222	2.7	16.1	10800	**A412_16.1 S3 ME3LA4**	282	**A412_16.1 P100 BE100LA4**	283
92	214	2.8	15.5	8150	**A352_15.5 S3 ME3LA4**	278	**A352_15.5 P100 BE100LA4**	279
102	194	1.3	14.1	3120	**A202_14.1 S3 ME3LA4**	270	**A202_14.1 P100 BE100LA4**	271
104	190	3.1	13.8	10300	**A412_13.8 S3 ME3LA4**	282	**A412_13.8 P100 BE100LA4**	283
105	187	2.0	13.6	4900	**A302_13.6 S3 ME3LA4**	274	**A302_13.6 P100 BE100LA4**	275
109	181	3.3	13.1	7820	**A352_13.1 S3 ME3LA4**	278	**A352_13.1 P100 BE100LA4**	279
120	165	1.3	12.0	3070	**A202_12.0 S3 ME3LA4**	270	**A202_12.0 P100 BE100LA4**	271
121	163	1.8	11.8	4750	**A302_11.8 S3 ME3LA4**	274	**A302_11.8 P100 BE100LA4**	275
121	163	2.5	11.8	7710	**A352_11.8 S3 ME3LA4**	278	**A352_11.8 P100 BE100LA4**	279
122	162	3.4	11.7	9870	**A412_11.7 S3 ME3LA4**	282	**A412_11.7 P100 BE100LA4**	283
124	159	2.0	23.1	3070	**A202_23.1 S3 ME3LA2**	270	**A202_23.1 P90 BE90L2**	271
134	147	2.7	10.6	7510	**A352_10.6 S3 ME3LA4**	278	**A352_10.6 P100 BE100LA4**	279

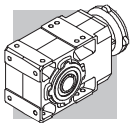

2.2 kW

n_2 min-1	M_2 Nm	S	i	R_{n2} N	IE2		IEC IE2	
135	146	1.0	10.6	2600	**A102_10.6 S3 ME3LA4**	266	**A102_10.6 P100 BE100LA4**	267
137	144	2.4	10.5	4660	**A302_10.5 S3 ME3LA4**	274	**A302_10.5 P100 BE100LA4**	275
138	143	1.6	10.3	3030	**A202_10.3 S3 ME3LA4**	270	**A202_10.3 P100 BE100LA4**	271
149	133	1.1	9.6	2580	**A102_9.6 S3 ME3LA4**	266	**A102_9.6 P100 BE100LA4**	267
153	130	1.6	9.4	2980	**A202_9.4 S3 ME3LA4**	270	**A202_9.4 P100 BE100LA4**	271
154	129	2.3	9.3	4530	**A302_9.3 S3 ME3LA4**	274	**A302_9.3 P100 BE100LA4**	275
154	129	3.1	9.3	7240	**A352_9.3 S3 ME3LA4**	278	**A352_9.3 P100 BE100LA4**	279
168	118	1.2	8.5	3050	**A102_8.5 S3 ME3LA4**	266	**A102_8.5 P100 BE100LA4**	267
169	117	2.6	8.5	4430	**A302_8.5 S3 ME3LA4**	274	**A302_8.5 P100 BE100LA4**	275
169	117	3.3	8.5	7060	**A352_8.5 S3 ME3LA4**	278	**A352_8.5 P100 BE100LA4**	279
171	116	1.8	8.4	2930	**A202_8.4 S3 ME3LA4**	270	**A202_8.4 P100 BE100LA4**	271
196	101	2.1	7.3	2860	**A202_7.3 S3 ME3LA4**	270	**A202_7.3 P100 BE100LA4**	271
198	100	1.4	7.2	2520	**A102_7.2 S3 ME3LA4**	266	**A102_7.2 P100 BE100LA4**	267
204	97	3.1	7.0	4240	**A302_7.0 S3 ME3LA4**	274	**A302_7.0 P100 BE100LA4**	275
219	90	2.3	6.5	2810	**A202_6.5 S3 ME3LA4**	270	**A202_6.5 P100 BE100LA4**	271
223	89	3.4	6.4	4150	**A302_6.4 S3 ME3LA4**	274	**A302_6.4 P100 BE100LA4**	275
226	88	1.6	6.3	2950	**A102_6.3 S3 ME3LA4**	266	**A102_6.3 P100 BE100LA4**	267
262	76	1.9	5.5	2430	**A102_5.5 S3 ME3LA4**	266	**A102_5.5 P100 BE100LA4**	267
267	74	2.8	5.4	2700	**A202_5.4 S3 ME3LA4**	270	**A202_5.4 P100 BE100LA4**	271
306	65	3.2	9.4	2620	**A202_9.4 S3 ME3LA2**	270	**A202_9.4 P90 BE90L2**	271

3 kW

n_2 min-1	M_2 Nm	S	i	R_{n2} N	IE2		IEC IE2	
1.7	15399	0.9	865.1	75000	**A904_865.1 S3 ME3LB4**	304	**A904_865.1 P100 BE100LB4**	305
1.9	13651	1.0	766.9	75000	**A904_766.9 S3 ME3LB4**	304	**A904_766.9 P100 BE100LB4**	305
2.0	12601	1.1	707.9	75000	**A904_707.9 S3 ME3LB4**	304	**A904_707.9 P100 BE100LB4**	305
2.4	10708	1.3	601.6	75000	**A904_601.6 S3 ME3LB4**	304	**A904_601.6 P100 BE100LB4**	305
2.6	9884	1.4	555.3	75000	**A904_555.3 S3 ME3LB4**	304	**A904_555.3 P100 BE100LB4**	305
3.0	8661	1.6	486.6	75000	**A904_486.6 S3 ME3LB4**	304	**A904_486.6 P100 BE100LB4**	305
3.0	8525	0.9	478.9	65000	**A804_478.9 S3 ME3LB4**	301	**A804_478.9 P100 BE100LB4**	302
3.2	7995	1.8	449.2	75000	**A904_449.2 S3 ME3LB4**	304	**A904_449.2 P100 BE100LB4**	305
3.3	7869	1.0	442.1	65000	**A804_442.1 S3 ME3LB4**	301	**A804_442.1 P100 BE100LB4**	302
3.7	6861	2.0	385.4	75000	**A904_385.4 S3 ME3LB4**	304	**A904_385.4 P100 BE100LB4**	305
3.8	6826	1.2	383.5	65000	**A804_383.5 S3 ME3LB4**	301	**A804_383.5 P100 BE100LB4**	302
4.0	6333	2.2	355.8	75000	**A904_355.8 S3 ME3LB4**	304	**A904_355.8 P100 BE100LB4**	305
4.1	6301	1.3	354.0	65000	**A804_354.0 S3 ME3LB4**	301	**A804_354.0 P100 BE100LB4**	302
4.6	5631	0.9	316.4	50000	**A704_316.4 S3 ME3LB4**	298	**A704_316.4 P100 BE100LB4**	299
4.7	5427	2.6	304.9	75000	**A904_304.9 S3 ME3LB4**	304	**A904_304.9 P100 BE100LB4**	305
4.8	5347	1.5	300.4	65000	**A804_300.4 S3 ME3LB4**	301	**A804_300.4 P100 BE100LB4**	302
4.9	5198	1.0	292.0	50000	**A704_292.0 S3 ME3LB4**	298	**A704_292.0 P100 BE100LB4**	299
5.1	5010	2.8	281.4	75000	**A904_281.4 S3 ME3LB4**	304	**A904_281.4 P100 BE100LB4**	305
5.2	4936	1.6	277.3	65000	**A804_277.3 S3 ME3LB4**	301	**A804_277.3 P100 BE100LB4**	302
6.0	4247	1.2	238.6	50000	**A704_238.6 S3 ME3LB4**	298	**A704_238.6 P100 BE100LB4**	299
6.2	4141	1.9	232.6	65000	**A804_232.6 S3 ME3LB4**	301	**A804_232.6 P100 BE100LB4**	302
6.4	4030	3.5	226.4	75000	**A904_226.4 S3 ME3LB4**	304	**A904_226.4 P100 BE100LB4**	305
6.5	3921	1.3	220.3	50000	**A704_220.3 S3 ME3LB4**	298	**A704_220.3 P100 BE100LB4**	299
6.7	3822	2.1	214.7	65000	**A804_214.7 S3 ME3LB4**	301	**A804_214.7 P100 BE100LB4**	302
7.8	3273	1.5	183.9	50000	**A704_183.9 S3 ME3LB4**	298	**A704_183.9 P100 BE100LB4**	299
8.4	3121	0.9	171.5	30000	**A603_171.5 S3 ME3LB4**	294	**A603_171.5 P100 BE100LB4**	295
8.4	3049	2.6	171.3	65000	**A804_171.3 S3 ME3LB4**	301	**A804_171.3 P100 BE100LB4**	302
8.5	3022	1.7	169.8	50000	**A704_169.8 S3 ME3LB4**	298	**A704_169.8 P100 BE100LB4**	299

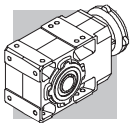

3 kW

n_2 min-1	M_2 Nm	S	i	R_{n2} N	IE2		IEC IE2	
9.2	2854	2.8	156.8	65000	**A803_156.8 S3 ME3LB4**	301	**A803_156.8 P100 BE100LB4**	302
9.2	2840	1.0	156.0	30000	**A603_156.0 S3 ME3LB4**	294	**A603_156.0 P100 BE100LB4**	295
9.4	2797	1.4	153.7	50000	**A703_153.7 S3 ME3LB4**	298	**A703_153.7 P100 BE100LB4**	299
9.9	2634	3.0	144.7	65000	**A803_144.7 S3 ME3LB4**	301	**A803_144.7 P100 BE100LB4**	302
10.0	2622	1.1	144.0	30000	**A603_144.0 S3 ME3LB4**	294	**A603_144.0 P100 BE100LB4**	295
10.2	2582	1.9	141.9	50000	**A703_141.9 S3 ME3LB4**	298	**A703_141.9 P100 BE100LB4**	299
10.8	2426	1.2	133.3	30000	**A603_133.3 S3 ME3LB4**	294	**A603_133.3 P100 BE100LB4**	295
11.0	2378	2.1	130.7	50000	**A703_130.7 S3 ME3LB4**	298	**A703_130.7 P100 BE100LB4**	299
11.5	2286	3.5	125.6	65000	**A803_125.6 S3 ME3LB4**	301	**A803_125.6 P100 BE100LB4**	302
11.6	2255	0.9	123.9	30000	**A553_123.9 S3 ME3LB4**	290	**A553_123.9 P100 BE100LB4**	291
11.7	2239	1.3	123.0	30000	**A603_123.0 S3 ME3LB4**	294	**A603_123.0 P100 BE100LB4**	295
11.9	2195	2.3	120.6	50000	**A703_120.6 S3 ME3LB4**	298	**A703_120.6 P100 BE100LB4**	299
13.4	1962	1.4	107.8	30000	**A603_107.8 S3 ME3LB4**	294	**A603_107.8 P100 BE100LB4**	295
13.8	1897	2.6	104.2	50000	**A703_104.2 S3 ME3LB4**	298	**A703_104.2 P100 BE100LB4**	299
14.2	1845	1.1	101.4	30000	**A553_101.4 S3 ME3LB4**	290	**A553_101.4 P100 BE100LB4**	291
14.5	1811	1.5	99.5	30000	**A603_99.5 S3 ME3LB4**	294	**A603_99.5 P100 BE100LB4**	295
15.0	1751	2.9	96.2	50000	**A703_96.2 S3 ME3LB4**	298	**A703_96.2 P100 BE100LB4**	299
16.1	1630	0.9	89.5	17100	**A503_89.5 S3 ME3LB4**	286	**A503_89.5 P100 BE100LB4**	287
16.7	1572	1.8	86.4	30000	**A603_86.4 S3 ME3LB4**	294	**A603_86.4 P100 BE100LB4**	295
16.8	1564	3.2	85.9	50000	**A703_85.9 S3 ME3LB4**	298	**A703_85.9 P100 BE100LB4**	299
17.7	1482	1.0	81.5	17200	**A503_81.5 S3 ME3LB4**	286	**A503_81.5 P100 BE100LB4**	287
18.1	1451	1.9	79.7	30000	**A603_79.7 S3 ME3LB4**	294	**A603_79.7 P100 BE100LB4**	295
18.1	1447	1.4	79.5	30000	**A553_79.5 S3 ME3LB4**	290	**A553_79.5 P100 BE100LB4**	291
18.2	1444	3.5	79.3	50000	**A703_79.3 S3 ME3LB4**	298	**A703_79.3 P100 BE100LB4**	299
20.5	1281	2.2	70.4	30000	**A603_70.4 S3 ME3LB4**	294	**A603_70.4 P100 BE100LB4**	295
20.5	1278	1.2	70.2	17200	**A503_70.2 S3 ME3LB4**	286	**A503_70.2 P100 BE100LB4**	287
22.2	1183	2.4	65.0	30000	**A603_65.0 S3 ME3LB4**	294	**A603_65.0 P100 BE100LB4**	295
22.4	1171	1.7	64.3	30000	**A553_64.3 S3 ME3LB4**	290	**A553_64.3 P100 BE100LB4**	291
22.5	1163	1.3	63.9	17100	**A503_63.9 S3 ME3LB4**	286	**A503_63.9 P100 BE100LB4**	287
25.3	1034	1.5	56.8	17000	**A503_56.8 S3 ME3LB4**	286	**A503_56.8 P100 BE100LB4**	287
25.9	1012	2.8	55.6	30000	**A603_55.6 S3 ME3LB4**	294	**A603_55.6 P100 BE100LB4**	295
27.9	941	1.6	51.7	16800	**A503_51.7 S3 ME3LB4**	286	**A503_51.7 P100 BE100LB4**	287
28.1	934	3.0	51.3	30000	**A603_51.3 S3 ME3LB4**	294	**A603_51.3 P100 BE100LB4**	295
28.3	927	2.2	51.0	30000	**A553_51.0 S3 ME3LB4**	290	**A553_51.0 P100 BE100LB4**	291
29.8	908	0.9	48.3	12700	**A412_48.3 S3 ME3LB4**	282	**A412_48.3 P100 BE100LB4**	283
32	822	3.4	45.2	30000	**A603_45.2 S3 ME3LB4**	294	**A603_45.2 P100 BE100LB4**	295
32	847	1.0	45.1	12600	**A412_45.1 S3 ME3LB4**	282	**A412_45.1 P100 BE100LB4**	283
32	819	1.8	45.0	16500	**A503_45.0 S3 ME3LB4**	286	**A503_45.0 P100 BE100LB4**	287
35	745	2.0	40.9	16300	**A503_40.9 S3 ME3LB4**	286	**A503_40.9 P100 BE100LB4**	287
36	734	2.7	40.3	30000	**A553_40.3 S3 ME3LB4**	290	**A553_40.3 P100 BE100LB4**	291
39	689	0.9	36.6	8550	**A352_36.6 S3 ME3LB4**	278	**A352_36.6 P100 BE100LB4**	279
40	675	1.2	35.9	12200	**A412_35.9 S3 ME3LB4**	282	**A412_35.9 P100 BE100LB4**	283
40	648	2.3	35.6	16000	**A503_35.6 S3 ME3LB4**	286	**A503_35.6 P100 BE100LB4**	287
43	623	1.0	33.2	8520	**A352_33.2 S3 ME3LB4**	278	**A352_33.2 P100 BE100LB4**	279
44	589	2.5	32.4	15700	**A503_32.4 S3 ME3LB4**	286	**A503_32.4 P100 BE100LB4**	287
51	535	1.1	28.4	8420	**A352_28.4 S3 ME3LB4**	278	**A352_28.4 P100 BE100LB4**	279
51	532	1.4	28.3	11700	**A412_28.3 S3 ME3LB4**	282	**A412_28.3 P100 BE100LB4**	283
54	481	3.1	26.4	15100	**A503_26.4 S3 ME3LB4**	286	**A503_26.4 P100 BE100LB4**	287
56	483	1.2	25.7	8330	**A352_25.7 S3 ME3LB4**	278	**A352_25.7 P100 BE100LB4**	279
60	438	3.4	24.0	14800	**A503_24.0 S3 ME3LB4**	286	**A503_24.0 P100 BE100LB4**	287
63	428	1.0	22.8	4610	**A302_22.8 S3 ME3LB4**	274	**A302_22.8 P100 BE100LB4**	275
64	426	1.6	22.7	11200	**A412_22.7 S3 ME3LB4**	282	**A412_22.7 P100 BE100LB4**	283
64	423	1.4	22.5	8190	**A352_22.5 S3 ME3LB4**	278	**A352_22.5 P100 BE100LB4**	279
69	393	3.1	20.9	15500	**A502_20.9 S3 ME3LB4**	286	**A502_20.9 P100 BE100LB4**	287
70	386	1.1	20.5	4620	**A302_20.5 S3 ME3LB4**	274	**A302_20.5 P100 BE100LB4**	275

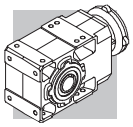

3 kW

n_2 min-1	M_2 Nm	S	i	R_{n2} N	IE2		IEC IE2	
70	384	1.6	20.4	8080	**A352_20.4 S3 ME3LB4**	278	**A352_20.4 P100 BE100LB4**	279
80	338	1.2	18.0	4600	**A302_18.0 S3 ME3LB4**	274	**A302_18.0 P100 BE100LB4**	275
81	334	1.9	17.8	10600	**A412_17.8 S3 ME3LB4**	282	**A412_17.8 P100 BE100LB4**	283
85	319	1.9	17.0	7830	**A352_17.0 S3 ME3LB4**	278	**A352_17.0 P100 BE100LB4**	279
88	307	1.3	16.3	4580	**A302_16.3 S3 ME3LB4**	274	**A302_16.3 P100 BE100LB4**	275
89	303	2.0	16.1	10400	**A412_16.1 S3 ME3LB4**	282	**A412_16.1 P100 BE100LB4**	283
93	291	2.1	15.5	7700	**A352_15.5 S3 ME3LB4**	278	**A352_15.5 P100 BE100LB4**	279
102	265	0.9	14.1	2650	**A202_14.1 S3 ME3LB4**	270	**A202_14.1 P100 BE100LB4**	271
105	259	2.3	13.8	9990	**A412_13.8 S3 ME3LB4**	282	**A412_13.8 P100 BE100LB4**	283
106	255	1.5	13.6	4500	**A302_13.6 S3 ME3LB4**	274	**A302_13.6 P100 BE100LB4**	275
110	246	2.4	13.1	7450	**A352_13.1 S3 ME3LB4**	278	**A352_13.1 P100 BE100LB4**	279
120	225	0.9	12.0	2670	**A202_12.0 S3 ME3LB4**	270	**A202_12.0 P100 BE100LB4**	271
122	221	1.4	11.8	4400	**A302_11.8 S3 ME3LB4**	274	**A302_11.8 P100 BE100LB4**	275
122	221	1.8	11.8	7410	**A352_11.8 S3 ME3LB4**	278	**A352_11.8 P100 BE100LB4**	279
123	221	2.5	11.7	9580	**A412_11.7 S3 ME3LB4**	282	**A412_11.7 P100 BE100LB4**	283
125	216	1.5	23.1	2690	**A202_23.1 S3 ME3LB2**	270	**A202_23.1 P100 BE100L2**	271
135	200	2.0	10.6	7230	**A352_10.6 S3 ME3LB4**	278	**A352_10.6 P100 BE100LB4**	279
138	197	1.7	10.5	4350	**A302_10.5 S3 ME3LB4**	274	**A302_10.5 P100 BE100LB4**	275
139	194	1.2	10.3	2690	**A202_10.3 S3 ME3LB4**	270	**A202_10.3 P100 BE100LB4**	271
142	190	2.8	10.1	9230	**A412_10.1 S3 ME3LB4**	282	**A412_10.1 P100 BE100LB4**	283
154	176	1.2	9.4	2670	**A202_9.4 S3 ME3LB4**	270	**A202_9.4 P100 BE100LB4**	271
155	175	1.7	9.3	4240	**A302_9.3 S3 ME3LB4**	274	**A302_9.3 P100 BE100LB4**	275
155	175	2.3	9.3	7000	**A352_9.3 S3 ME3LB4**	278	**A352_9.3 P100 BE100LB4**	279
157	173	3.2	9.2	8980	**A412_9.2 S3 ME3LB4**	282	**A412_9.2 P100 BE100LB4**	283
170	159	1.9	8.5	4170	**A302_8.5 S3 ME3LB4**	274	**A302_8.5 P100 BE100LB4**	275
170	159	2.4	8.5	6840	**A352_8.5 S3 ME3LB4**	278	**A352_8.5 P100 BE100LB4**	279
172	157	1.3	8.4	2650	**A202_8.4 S3 ME3LB4**	270	**A202_8.4 P100 BE100LB4**	271
173	157	3.5	8.3	8740	**A412_8.3 S3 ME3LB4**	282	**A412_8.3 P100 BE100LB4**	283
198	137	1.5	7.3	2620	**A202_7.3 S3 ME3LB4**	270	**A202_7.3 P100 BE100LB4**	271
200	136	1.0	7.2	2220	**A102_7.2 S3 ME3LB4**	266	**A102_7.2 P100 BE100LB4**	267
205	132	2.3	7.0	4030	**A302_7.0 S3 ME3LB4**	274	**A302_7.0 P100 BE100LB4**	275
205	132	2.8	7.0	6520	**A352_7.0 S3 ME3LB4**	278	**A352_7.0 P100 BE100LB4**	279
220	123	1.7	6.5	2590	**A202_6.5 S3 ME3LB4**	270	**A202_6.5 P100 BE100LB4**	271
225	121	2.5	6.4	3950	**A302_6.4 S3 ME3LB4**	274	**A302_6.4 P100 BE100LB4**	275
225	121	2.9	6.4	6360	**A352_6.4 S3 ME3LB4**	278	**A352_6.4 P100 BE100LB4**	279
227	119	1.2	6.3	2640	**A102_6.3 S3 ME3LB4**	266	**A102_6.3 P100 BE100LB4**	267
245	110	2.7	11.8	3870	**A302_11.8 S3 ME3LB2**	274	**A302_11.8 P100 BE100L2**	275
263	103	1.4	5.5	2200	**A102_5.5 S3 ME3LB4**	266	**A102_5.5 P100 BE100LB4**	267
266	102	2.9	5.4	3810	**A302_5.4 S3 ME3LB4**	274	**A302_5.4 P100 BE100LB4**	275
266	102	3.3	5.4	6070	**A352_5.4 S3 ME3LB4**	278	**A352_5.4 P100 BE100LB4**	279
269	101	2.1	5.4	2520	**A202_5.4 S3 ME3LB4**	270	**A202_5.4 P100 BE100LB4**	271
279	97	1.9	10.3	2500	**A202_10.3 S3 ME3LB2**	270	**A202_10.3 P100 BE100L2**	271
309	87	3.4	9.3	3670	**A302_9.3 S3 ME3LB2**	274	**A302_9.3 P100 BE100L2**	275
344	78	2.7	8.4	2410	**A202_8.4 S3 ME3LB2**	270	**A202_8.4 P100 BE100L2**	271
399	67	2.1	7.2	2090	**A102_7.2 S3 ME3LB2**	266	**A102_7.2 P100 BE100L2**	267
455	59	2.3	6.3	2430	**A102_6.3 S3 ME3LB2**	266	**A102_6.3 P100 BE100L2**	267
527	51	2.6	5.5	1990	**A102_5.5 S3 ME3LB2**	266	**A102_5.5 P100 BE100L2**	267

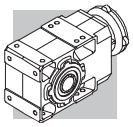

4 kW

n_2 min-1	M_2 Nm	S	i	R_{n2} N	IE2		IEC IE2	
2.4	14456	1.0	601.6	75000	**A904_601.6 S4 ME4SA4**	304	**A904_601.6 P112 BE112M4**	305
2.6	13344	1.0	555.3	75000	**A904_555.3 S4 ME4SA4**	304	**A904_555.3 P112 BE112M4**	305
3.0	11693	1.2	486.6	75000	**A904_486.6 S4 ME4SA4**	304	**A904_486.6 P112 BE112M4**	305
3.2	10793	1.3	449.2	75000	**A904_449.2 S4 ME4SA4**	304	**A904_449.2 P112 BE112M4**	305
3.7	9262	1.5	385.4	75000	**A904_385.4 S4 ME4SA4**	304	**A904_385.4 P112 BE112M4**	305
3.8	9215	0.9	383.5	65000	**A804_383.5 S4 ME4SA4**	301	**A804_383.5 P112 BE112M4**	302
4.0	8550	1.6	355.8	75000	**A904_355.8 S4 ME4SA4**	304	**A904_355.8 P112 BE112M4**	305
4.1	8506	0.9	354.0	65000	**A804_354.0 S4 ME4SA4**	301	**A804_354.0 P112 BE112M4**	302
4.7	7326	1.9	304.9	75000	**A904_304.9 S4 ME4SA4**	304	**A904_304.9 P112 BE112M4**	305
4.8	7218	1.1	300.4	65000	**A804_300.4 S4 ME4SA4**	301	**A804_300.4 P112 BE112M4**	302
5.1	6763	2.1	281.4	75000	**A904_281.4 S4 ME4SA4**	304	**A904_281.4 P112 BE112M4**	305
5.2	6663	1.2	277.3	65000	**A804_277.3 S4 ME4SA4**	301	**A804_277.3 P112 BE112M4**	302
6.0	5734	0.9	238.6	50000	**A704_238.6 S4 ME4SA4**	298	**A704_238.6 P112 BE112M4**	299
6.2	5590	1.4	232.6	65000	**A804_232.6 S4 ME4SA4**	301	**A804_232.6 P112 BE112M4**	302
6.4	5441	2.6	226.4	75000	**A904_226.4 S4 ME4SA4**	304	**A904_226.4 P112 BE112M4**	305
6.5	5293	0.9	220.3	50000	**A704_220.3 S4 ME4SA4**	298	**A704_220.3 P112 BE112M4**	299
6.7	5160	1.6	214.7	65000	**A804_214.7 S4 ME4SA4**	301	**A804_214.7 P112 BE112M4**	302
6.9	5023	2.8	209.0	75000	**A904_209.0 S4 ME4SA4**	304	**A904_209.0 P112 BE112M4**	305
7.8	4419	1.1	183.9	50000	**A704_183.9 S4 ME4SA4**	298	**A704_183.9 P112 BE112M4**	299
8.0	4325	3.2	180.0	75000	**A904_180.0 S4 ME4SA4**	304	**A904_180.0 P112 BE112M4**	305
8.4	4116	1.9	171.3	65000	**A804_171.3 S4 ME4SA4**	301	**A804_171.3 P112 BE112M4**	302
8.5	4079	1.2	169.8	50000	**A704_169.8 S4 ME4SA4**	298	**A704_169.8 P112 BE112M4**	299
8.7	3992	3.5	166.1	75000	**A904_166.1 S4 ME4SA4**	304	**A904_166.1 P112 BE112M4**	305
9.2	3853	2.1	156.8	65000	**A803_156.8 S4 ME4SA4**	301	**A803_156.8 P112 BE112M4**	302
9.4	3776	1.1	153.7	50000	**A703_153.7 S4 ME4SA4**	298	**A703_153.7 P112 BE112M4**	299
9.9	3556	2.2	144.7	65000	**A803_144.7 S4 ME4SA4**	301	**A803_144.7 P112 BE112M4**	302
10.2	3486	1.4	141.9	50000	**A703_141.9 S4 ME4SA4**	298	**A703_141.9 P112 BE112M4**	299
11.0	3210	1.6	130.7	50000	**A703_130.7 S4 ME4SA4**	298	**A703_130.7 P112 BE112M4**	299
11.5	3086	2.6	125.6	65000	**A803_125.6 S4 ME4SA4**	301	**A803_125.6 P112 BE112M4**	302
11.7	3023	0.9	123.0	30000	**A603_123.0 S4 ME4SA4**	294	**A603_123.0 P112 BE112M4**	295
11.9	2964	1.7	120.6	50000	**A703_120.6 S4 ME4SA4**	298	**A703_120.6 P112 BE112M4**	299
12.4	2849	2.8	116.0	65000	**A803_116.0 S4 ME4SA4**	301	**A803_116.0 P112 BE112M4**	302
13.4	2649	1.1	107.8	30000	**A603_107.8 S4 ME4SA4**	294	**A603_107.8 P112 BE112M4**	295
13.8	2561	2.0	104.2	50000	**A703_104.2 S4 ME4SA4**	298	**A703_104.2 P112 BE112M4**	299
13.8	2556	3.1	104.0	65000	**A803_104.0 S4 ME4SA4**	301	**A803_104.0 P112 BE112M4**	302
14.5	2445	1.1	99.5	30000	**A603_99.5 S4 ME4SA4**	294	**A603_99.5 P112 BE112M4**	295
15.0	2364	2.1	96.2	50000	**A703_96.2 S4 ME4SA4**	298	**A703_96.2 P112 BE112M4**	299
15.0	2359	3.4	96.0	65000	**A803_96.0 S4 ME4SA4**	301	**A803_96.0 P112 BE112M4**	302
16.7	2122	1.3	86.4	30000	**A603_86.4 S4 ME4SA4**	294	**A603_86.4 P112 BE112M4**	295
16.8	2112	2.4	85.9	50000	**A703_85.9 S4 ME4SA4**	298	**A703_85.9 P112 BE112M4**	299
18.1	1959	1.4	79.7	30000	**A603_79.7 S4 ME4SA4**	294	**A603_79.7 P112 BE112M4**	295
18.1	1954	1.0	79.5	30000	**A553_79.5 S4 ME4SA4**	290	**A553_79.5 P112 BE112M4**	291
18.2	1949	2.6	79.3	50000	**A703_79.3 S4 ME4SA4**	298	**A703_79.3 P112 BE112M4**	299
19.9	1782	2.8	72.5	50000	**A703_72.5 S4 ME4SA4**	298	**A703_72.5 P112 BE112M4**	299
20.5	1730	1.6	70.4	30000	**A603_70.4 S4 ME4SA4**	294	**A603_70.4 P112 BE112M4**	295
21.5	1645	3.0	66.9	50000	**A703_66.9 S4 ME4SA4**	298	**A703_66.9 P112 BE112M4**	299
22.2	1597	1.8	65.0	30000	**A603_65.0 S4 ME4SA4**	294	**A603_65.0 P112 BE112M4**	295
22.4	1580	1.3	64.3	30000	**A553_64.3 S4 ME4SA4**	290	**A553_64.3 P112 BE112M4**	291
22.5	1570	1.0	63.9	14700	**A503_63.9 S4 ME4SA4**	286	**A503_63.9 P112 BE112M4**	287
25.3	1396	1.1	56.8	14800	**A503_56.8 S4 ME4SA4**	286	**A503_56.8 P112 BE112M4**	287
25.9	1366	2.0	55.6	30000	**A603_55.6 S4 ME4SA4**	294	**A603_55.6 P112 BE112M4**	295
27.9	1270	1.2	51.7	14900	**A503_51.7 S4 ME4SA4**	286	**A503_51.7 P112 BE112M4**	287
28.1	1261	2.2	51.3	30000	**A603_51.3 S4 ME4SA4**	294	**A603_51.3 P112 BE112M4**	295
28.3	1252	1.6	51.0	30000	**A553_51.0 S4 ME4SA4**	290	**A553_51.0 P112 BE112M4**	291
32	1110	2.5	45.2	30000	**A603_45.2 S4 ME4SA4**	294	**A603_45.2 P112 BE112M4**	295
32	1106	1.4	45.0	14900	**A503_45.0 S4 ME4SA4**	286	**A503_45.0 P112 BE112M4**	287
35	1025	2.7	41.7	30000	**A603_41.7 S4 ME4SA4**	294	**A603_41.7 P112 BE112M4**	295

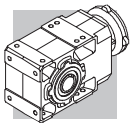

4 kW

n_2 min-1	M_2 Nm	S	i	R_{n2} N	IE2		IEC IE2	
35	1006	1.5	40.9	14800	**A503_40.9 S4 ME4SA4**	286	**A503_40.9 P112 BE112M4**	287
36	990	2.0	40.3	30000	**A553_40.3 S4 ME4SA4**	290	**A553_40.3 P112 BE112M4**	291
40	875	1.7	35.6	14700	**A503_35.6 S4 ME4SA4**	286	**A503_35.6 P112 BE112M4**	287
42	843	3.3	34.3	30000	**A603_34.3 S4 ME4SA4**	294	**A603_34.3 P112 BE112M4**	295
44	796	1.9	32.4	14500	**A503_32.4 S4 ME4SA4**	286	**A503_32.4 P112 BE112M4**	287
48	735	2.7	29.9	30000	**A553_29.9 S4 ME4SA4**	290	**A553_29.9 P112 BE112M4**	291
51	719	1.0	28.3	10900	**A412_28.3 S4 ME4SA4**	282	**A412_28.3 P112 BE112M4**	283
54	650	2.3	26.4	14100	**A503_26.4 S4 ME4SA4**	286	**A503_26.4 P112 BE112M4**	287
56	652	0.9	25.7	7420			**A352_25.7 P112 BE112M4**	279
60	591	2.5	24.0	13900	**A503_24.0 S4 ME4SA4**	286	**A503_24.0 P112 BE112M4**	287
61	585	3.3	23.8	30000	**A553_23.8 S4 ME4SA4**	290	**A553_23.8 P112 BE112M4**	291
64	576	1.2	22.7	10500	**A412_22.7 S4 ME4SA4**	282	**A412_22.7 P112 BE112M4**	283
64	571	1.1	22.5	7400			**A352_22.5 P112 BE112M4**	279
69	531	2.3	20.9	15100	**A502_20.9 S4 ME4SA4**	286	**A502_20.9 P112 BE112M4**	287
70	518	1.2	20.4	7360			**A352_20.4 P112 BE112M4**	279
80	456	0.9	18.0	3930			**A302_18.0 P112 BE112M4**	275
81	451	1.4	17.8	10100	**A412_17.8 S4 ME4SA4**	282	**A412_17.8 P112 BE112M4**	283
85	430	1.4	17.0	7240			**A352_17.0 P112 BE112M4**	279
87	421	2.9	16.6	14200	**A502_16.6 S4 ME4SA4**	286	**A502_16.6 P112 BE112M4**	287
88	415	0.9	16.3	3970			**A302_16.3 P112 BE112M4**	275
89	408	1.5	16.1	9940	**A412_16.1 S4 ME4SA4**	282	**A412_16.1 P112 BE112M4**	283
93	393	1.5	15.5	7160			**A352_15.5 P112 BE112M4**	279
105	349	1.7	13.8	9610	**A412_13.8 S4 ME4SA4**	282	**A412_13.8 P112 BE112M4**	283
106	344	1.1	13.6	4000			**A302_13.6 P112 BE112M4**	275
110	333	3.3	13.1	13300	**A502_13.1 S4 ME4SA4**	286	**A502_13.1 P112 BE112M4**	287
110	332	1.8	13.1	7000			**A352_13.1 P112 BE112M4**	279
122	299	1.0	11.8	3960			**A302_11.8 P112 BE112M4**	275
122	299	1.3	11.8	7050	**A352_11.8 S4 ME4SA4**	278	**A352_11.8 P112 BE112M4**	279
123	298	1.8	11.7	9260	**A412_11.7 S4 ME4SA4**	282	**A412_11.7 P112 BE112M4**	283
127	282	1.2	22.8	3980			**A302_22.8 P112 BE112M2**	275
135	270	1.5	10.6	6910	**A352_10.6 S4 ME4SA4**	278	**A352_10.6 P112 BE112M4**	279
138	265	1.3	10.5	3970			**A302_10.5 P112 BE112M4**	275
142	257	2.1	10.1	8960	**A412_10.1 S4 ME4SA4**	282	**A412_10.1 P112 BE112M4**	283
155	236	1.3	9.3	3900			**A302_9.3 P112 BE112M4**	275
155	236	1.7	9.3	6730	**A352_9.3 S4 ME4SA4**	278	**A352_9.3 P112 BE112M4**	279
157	233	2.4	9.2	8740	**A412_9.2 S4 ME4SA4**	282	**A412_9.2 P112 BE112M4**	283
170	215	1.4	8.5	3860			**A302_8.5 P112 BE112M4**	275
170	215	1.8	8.5	6590	**A352_8.5 S4 ME4SA4**	278	**A352_8.5 P112 BE112M4**	279
172	212	1.0	8.4	2300			**A202_8.4 P112 BE112M4**	271
173	211	2.6	8.3	8520	**A412_8.3 S4 ME4SA4**	282	**A412_8.3 P112 BE112M4**	283
198	185	1.1	7.3	2310			**A202_7.3 P112 BE112M4**	271
202	181	3.0	7.1	8180	**A412_7.1 S4 ME4SA4**	282	**A412_7.1 P112 BE112M4**	283
205	178	1.7	7.0	3770			**A302_7.0 P112 BE112M4**	275
205	178	2.1	7.0	6310	**A352_7.0 S4 ME4SA4**	278	**A352_7.0 P112 BE112M4**	279
220	166	1.3	6.5	2310			**A202_6.5 P112 BE112M4**	271
225	163	1.8	6.4	3720			**A302_6.4 P112 BE112M4**	275
225	163	2.2	6.4	6180	**A352_6.4 S4 ME4SA4**	278	**A352_6.4 P112 BE112M4**	279
263	139	1.0	5.5	1910	**A102_5.5 S4 ME4SA4**	266	**A102_5.5 P112 BE112M4**	267
266	137	2.2	5.4	3610			**A302_5.4 P112 BE112M4**	275
266	137	2.5	5.4	5920	**A352_5.4 S4 ME4SA4**	278	**A352_5.4 P112 BE112M4**	279
269	136	1.5	5.4	2300			**A202_5.4 P112 BE112M4**	271
273	132	3.0	10.6	5850	**A352_10.6 S4 ME4SA2**	278	**A352_10.6 P112 BE112M2**	279
311	115	3.5	9.3	5650	**A352_9.3 S4 ME4SA2**	278	**A352_9.3 P112 BE112M2**	279
346	104	2.1	8.4	2230			**A202_8.4 P112 BE112M2**	271
413	87	3.4	7.0	3280			**A302_7.0 P112 BE112M2**	275
458	78	1.8	6.3	2240			**A102_6.3 P112 BE112M2**	267
542	66	2.9	5.4	2080			**A202_5.4 P112 BE112M2**	271

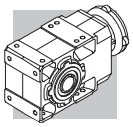

5.5 kW

n_2 min-1	M_2 Nm	S	i	R_{n2} N	IE2	IE3		IEC IE2	IEC IE3	
3.0	15590	0.9	486.6	75000	**A904_486.6 S4 ME4SB4**	**A904_486.6 S4 MX4SB4**	304	**A904_486.6 P132 BE132S4**	**A904_486.6 P132 BX132S4**	305
3.3	14391	1.0	449.2	75000	**A904_449.2 S4 ME4SB4**	**A904_449.2 S4 MX4SB4**	304	**A904_449.2 P132 BE132S4**	**A904_449.2 P132 BX132S4**	305
3.8	12350	1.1	385.4	75000	**A904_385.4 S4 ME4SB4**	**A904_385.4 S4 MX4SB4**	304	**A904_385.4 P132 BE132S4**	**A904_385.4 P132 BX132S4**	305
4.1	11400	1.2	355.8	75000	**A904_355.8 S4 ME4SB4**	**A904_355.8 S4 MX4SB4**	304	**A904_355.8 P132 BE132S4**	**A904_355.8 P132 BX132S4**	305
4.8	9769	1.4	304.9	75000	**A904_304.9 S4 ME4SB4**	**A904_304.9 S4 MX4SB4**	304	**A904_304.9 P132 BE132S4**	**A904_304.9 P132 BX132S4**	305
5.2	9017	1.6	281.4	75000	**A904_281.4 S4 ME4SB4**	**A904_281.4 S4 MX4SB4**	304	**A904_281.4 P132 BE132S4**	**A904_281.4 P132 BX132S4**	305
5.3	8884	0.9	277.3	65000	**A804_277.3 S4 ME4SB4**	**A804_277.3 S4 MX4SB4**	301	**A804_277.3 P132 BE132S4**	**A804_277.3 P132 BX132S4**	302
6.3	7453	1.1	232.6	65000	**A804_232.6 S4 ME4SB4**	**A804_232.6 S4 MX4SB4**	301	**A804_232.6 P132 BE132S4**	**A804_232.6 P132 BX132S4**	302
6.4	7255	1.9	226.4	75000	**A904_226.4 S4 ME4SB4**	**A904_226.4 S4 MX4SB4**	304	**A904_226.4 P132 BE132S4**	**A904_226.4 P132 BX132S4**	305
6.8	6880	1.2	214.7	65000	**A804_214.7 S4 ME4SB4**	**A804_214.7 S4 MX4SB4**	301	**A804_214.7 P132 BE132S4**	**A804_214.7 P132 BX132S4**	302
7.0	6697	2.1	209.0	75000	**A904_209.0 S4 ME4SB4**	**A904_209.0 S4 MX4SB4**	304	**A904_209.0 P132 BE132S4**	**A904_209.0 P132 BX132S4**	305
8.1	5766	2.4	180.0	75000	**A904_180.0 S4 ME4SB4**	**A904_180.0 S4 MX4SB4**	304	**A904_180.0 P132 BE132S4**	**A904_180.0 P132 BX132S4**	305
8.5	5488	1.5	171.3	65000	**A804_171.3 S4 ME4SB4**	**A804_171.3 S4 MX4SB4**	301	**A804_171.3 P132 BE132S4**	**A804_171.3 P132 BX132S4**	302
8.6	5439	0.9	169.8	50000	**A704_169.8 S4 ME4SB4**	**A704_169.8 S4 MX4SB4**	298	**A704_169.8 P132 BE132S4**	**A704_169.8 P132 BX132S4**	299
8.8	5323	2.6	166.1	75000	**A904_166.1 S4 ME4SB4**	**A904_166.1 S4 MX4SB4**	304	**A904_166.1 P132 BE132S4**	**A904_166.1 P132 BX132S4**	305
9.3	5137	1.6	156.8	65000	**A803_156.8 S4 ME4SB4**	**A803_156.8 S4 MX4SB4**	301	**A803_156.8 P132 BE132S4**	**A803_156.8 P132 BX132S4**	302
9.7	4947	2.8	151.0	75000	**A903_151.0 S4 ME4SB4**	**A903_151.0 S4 MX4SB4**	304	**A903_151.0 P132 BE132S4**	**A903_151.0 P132 BX132S4**	305
10.1	4742	1.7	144.7	65000	**A803_144.7 S4 ME4SB4**	**A803_144.7 S4 MX4SB4**	301	**A803_144.7 P132 BE132S4**	**A803_144.7 P132 BX132S4**	302
10.3	4647	1.1	141.9	50000	**A703_141.9 S4 ME4SB4**	**A703_141.9 S4 MX4SB4**	298	**A703_141.9 P132 BE132S4**	**A703_141.9 P132 BX132S4**	299
10.5	4567	2.8	139.4	75000	**A903_139.4 S4 ME4SB4**	**A903_139.4 S4 MX4SB4**	304	**A903_139.4 P132 BE132S4**	**A903_139.4 P132 BX132S4**	305
11.2	4281	1.2	130.7	50000	**A703_130.7 S4 ME4SB4**	**A703_130.7 S4 MX4SB4**	298	**A703_130.7 P132 BE132S4**	**A703_130.7 P132 BX132S4**	299
11.5	4149	3.2	126.6	75000	**A903_126.6 S4 ME4SB4**	**A903_126.6 S4 MX4SB4**	304	**A903_126.6 P132 BE132S4**	**A903_126.6 P132 BX132S4**	305
11.6	4115	1.9	125.6	65000	**A803_125.6 S4 ME4SB4**	**A803_125.6 S4 MX4SB4**	301	**A803_125.6 P132 BE132S4**	**A803_125.6 P132 BX132S4**	302
12.1	3951	1.3	120.6	50000	**A703_120.6 S4 ME4SB4**	**A703_120.6 S4 MX4SB4**	298	**A703_120.6 P132 BE132S4**	**A703_120.6 P132 BX132S4**	299
12.6	3799	2.1	116.0	65000	**A803_116.0 S4 ME4SB4**	**A803_116.0 S4 MX4SB4**	301	**A803_116.0 P132 BE132S4**	**A803_116.0 P132 BX132S4**	302
14.0	3415	1.5	104.2	50000	**A703_104.2 S4 ME4SB4**	**A703_104.2 S4 MX4SB4**	298	**A703_104.2 P132 BE132S4**	**A703_104.2 P132 BX132S4**	299
14.0	3408	2.3	104.0	65000	**A803_104.0 S4 ME4SB4**	**A803_104.0 S4 MX4SB4**	301	**A803_104.0 P132 BE132S4**	**A803_104.0 P132 BX132S4**	302
15.2	3152	1.6	96.2	50000	**A703_96.2 S4 ME4SB4**	**A703_96.2 S4 MX4SB4**	298	**A703_96.2 P132 BE132S4**	**A703_96.2 P132 BX132S4**	299
15.2	3146	2.5	96.0	65000	**A803_96.0 S4 ME4SB4**	**A803_96.0 S4 MX4SB4**	301	**A803_96.0 P132 BE132S4**	**A803_96.0 P132 BX132S4**	302
16.4	2922	2.7	89.2	65000	**A803_89.2 S4 ME4SB4**	**A803_89.2 S4 MX4SB4**	301	**A803_89.2 P132 BE132S4**	**A803_89.2 P132 BX132S4**	302
16.9	2829	1.0	86.4	30000	**A603_86.4 S4 ME4SB4**	**A603_86.4 S4 MX4SB4**	294	**A603_86.4 P132 BE132S4**	**A603_86.4 P132 BX132S4**	295
17.0	2815	1.8	85.9	50000	**A703_85.9 S4 ME4SB4**	**A703_85.9 S4 MX4SB4**	298	**A703_85.9 P132 BE132S4**	**A703_85.9 P132 BX132S4**	299
17.7	2697	3.0	82.3	65000	**A803_82.3 S4 ME4SB4**	**A803_82.3 S4 MX4SB4**	301	**A803_82.3 P132 BE132S4**	**A803_82.3 P132 BX132S4**	302
18.3	2612	1.1	79.7	30000	**A603_79.7 S4 ME4SB4**	**A603_79.7 S4 MX4SB4**	294	**A603_79.7 P132 BE132S4**	**A603_79.7 P132 BX132S4**	295
18.4	2599	1.9	79.3	50000	**A703_79.3 S4 ME4SB4**	**A703_79.3 S4 MX4SB4**	298	**A703_79.3 P132 BE132S4**	**A703_79.3 P132 BX132S4**	299
20.1	2376	2.1	72.5	50000	**A703_72.5 S4 ME4SB4**	**A703_72.5 S4 MX4SB4**	298	**A703_72.5 P132 BE132S4**	**A703_72.5 P132 BX132S4**	299
20.2	2371	3.4	72.4	65000	**A803_72.4 S4 ME4SB4**	**A803_72.4 S4 MX4SB4**	301	**A803_72.4 P132 BE132S4**	**A803_72.4 P132 BX132S4**	302
20.7	2306	1.2	70.4	30000	**A603_70.4 S4 ME4SB4**	**A603_70.4 S4 MX4SB4**	294	**A603_70.4 P132 BE132S4**	**A603_70.4 P132 BX132S4**	295
21.8	2193	2.3	66.9	50000	**A703_66.9 S4 ME4SB4**	**A703_66.9 S4 MX4SB4**	298	**A703_66.9 P132 BE132S4**	**A703_66.9 P132 BX132S4**	299
22.5	2129	1.3	65.0	30000	**A603_65.0 S4 ME4SB4**	**A603_65.0 S4 MX4SB4**	294	**A603_65.0 P132 BE132S4**	**A603_65.0 P132 BX132S4**	295
22.7	2107	0.9	64.3	30000	**A553_64.3 S4 ME4SB4**	**A553_64.3 S4 MX4SB4**	290	**A553_64.3 P132 BE132S4**	**A553_64.3 P132 BX132S4**	291
25.3	1889	2.6	57.7	50000	**A703_57.7 S4 ME4SB4**	**A703_57.7 S4 MX4SB4**	298	**A703_57.7 P132 BE132S4**	**A703_57.7 P132 BX132S4**	299
26.3	1822	1.5	55.6	30000	**A603_55.6 S4 ME4SB4**	**A603_55.6 S4 MX4SB4**	294	**A603_55.6 P132 BE132S4**	**A603_55.6 P132 BX132S4**	295
27.4	1744	2.9	53.2	50000	**A703_53.2 S4 ME4SB4**	**A703_53.2 S4 MX4SB4**	298	**A703_53.2 P132 BE132S4**	**A703_53.2 P132 BX132S4**	299
28.4	1681	1.7	51.3	30000	**A603_51.3 S4 ME4SB4**	**A603_51.3 S4 MX4SB4**	294	**A603_51.3 P132 BE132S4**	**A603_51.3 P132 BX132S4**	295
28.7	1669	1.2	51.0	30000	**A553_51.0 S4 ME4SB4**	**A553_51.0 S4 MX4SB4**	290	**A553_51.0 P132 BE132S4**	**A553_51.0 P132 BX132S4**	291
29.8	1605	3.1	49.0	50000	**A703_49.0 S4 ME4SB4**	**A703_49.0 S4 MX4SB4**	298	**A703_49.0 P132 BE132S4**	**A703_49.0 P132 BX132S4**	299
32	1482	3.2	45.2	50000	**A703_45.2 S4 ME4SB4**	**A703_45.2 S4 MX4SB4**	298	**A703_45.2 P132 BE132S4**	**A703_45.2 P132 BX132S4**	299
32	1480	1.9	45.2	30000	**A603_45.2 S4 ME4SB4**	**A603_45.2 S4 MX4SB4**	294	**A603_45.2 P132 BE132S4**	**A603_45.2 P132 BX132S4**	295
32	1474	1.0	45.0	12400	**A503_45.0 S4 ME4SB4**	**A503_45.0 S4 MX4SB4**	286	**A503_45.0 P132 BE132S4**	**A503_45.0 P132 BX132S4**	287
35	1367	2.0	41.7	30000	**A603_41.7 S4 ME4SB4**	**A603_41.7 S4 MX4SB4**	294	**A603_41.7 P132 BE132S4**	**A603_41.7 P132 BX132S4**	295
36	1341	1.1	40.9	12600	**A503_40.9 S4 ME4SB4**	**A503_40.9 S4 MX4SB4**	286	**A503_40.9 P132 BE132S4**	**A503_40.9 P132 BX132S4**	287
36	1320	1.5	40.3	30000	**A553_40.3 S4 ME4SB4**	**A553_40.3 S4 MX4SB4**	290	**A553_40.3 P132 BE132S4**	**A553_40.3 P132 BX132S4**	291
41	1166	1.3	35.6	12700	**A503_35.6 S4 ME4SB4**	**A503_35.6 S4 MX4SB4**	286	**A503_35.6 P132 BE132S4**	**A503_35.6 P132 BX132S4**	287
43	1124	2.5	34.3	30000	**A603_34.3 S4 ME4SB4**	**A603_34.3 S4 MX4SB4**	294	**A603_34.3 P132 BE132S4**	**A603_34.3 P132 BX132S4**	295
45	1061	1.4	32.4	12700	**A503_32.4 S4 ME4SB4**	**A503_32.4 S4 MX4SB4**	286	**A503_32.4 P132 BE132S4**	**A503_32.4 P132 BX132S4**	287
46	1037	2.7	31.7	30000	**A603_31.7 S4 ME4SB4**	**A603_31.7 S4 MX4SB4**	294	**A603_31.7 P132 BE132S4**	**A603_31.7 P132 BX132S4**	295

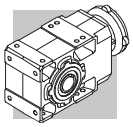

5.5 kW

n_2 min-1	M_2 Nm	S	i	R_{n2} N	IE2	IE3		IE2	IE3	
49	981	2.0	29.9	30000	**A553_29.9 S4 ME4SB4**	**A553_29.9 S4 MX4SB4**	290	**A553_29.9 P132 BE132S4**	**A553_29.9 P132 BX132S4**	291
52	912	3.1	27.9	30000	**A603_27.9 S4 ME4SB4**	**A603_27.9 S4 MX4SB4**	294	**A603_27.9 P132 BE132S4**	**A603_27.9 P132 BX132S4**	295
55	866	1.7	26.4	12600	**A503_26.4 S4 ME4SB4**	**A503_26.4 S4 MX4SB4**	286	**A503_26.4 P132 BE132S4**	**A503_26.4 P132 BX132S4**	287
57	842	3.3	25.7	30000	**A603_25.7 S4 ME4SB4**	**A603_25.7 S4 MX4SB4**	294	**A603_25.7 P132 BE132S4**	**A603_25.7 P132 BX132S4**	295
61	788	1.9	24.0	12500	**A503_24.0 S4 ME4SB4**	**A503_24.0 S4 MX4SB4**	286	**A503_24.0 P132 BE132S4**	**A503_24.0 P132 BX132S4**	287
61	779	2.5	23.8	29800	**A553_23.8 S4 ME4SB4**	**A553_23.8 S4 MX4SB4**	290	**A553_23.8 P132 BE132S4**	**A553_23.8 P132 BX132S4**	291
70	708	1.7	20.9	14400	**A502_20.9 S4 ME4SB4**	**A502_20.9 S4 MX4SB4**	286	**A502_20.9 P132 BE132S4**	**A502_20.9 P132 BX132S4**	287
71	697	2.9	20.6	30000	**A602_20.6 S4 ME4SB4**	**A602_20.6 S4 MX4SB4**	294	**A602_20.6 P132 BE132S4**	**A602_20.6 P132 BX132S4**	295
76	651	2.8	19.2	29300	**A552_19.2 S4 ME4SB4**	**A552_19.2 S4 MX4SB4**	290	**A552_19.2 P132 BE132S4**	**A552_19.2 P132 BX132S4**	291
82	601	1.0	17.8	9280	**A412_17.8 S4 ME4SB4**	**A412_17.8 S4 MX4SB4**	282	**A412_17.8 P132 BE132S4**	**A412_17.8 P132 BX132S4**	283
87	566	3.5	16.7	30000	**A602_16.7 S4 ME4SB4**	**A602_16.7 S4 MX4SB4**	294	**A602_16.7 P132 BE132S4**	**A602_16.7 P132 BX132S4**	295
88	561	2.1	16.6	13600	**A502_16.6 S4 ME4SB4**	**A502_16.6 S4 MX4SB4**	286	**A502_16.6 P132 BE132S4**	**A502_16.6 P132 BX132S4**	287
91	545	1.1	16.1	9160	**A412_16.1 S4 ME4SB4**	**A412_16.1 S4 MX4SB4**	282	**A412_16.1 P132 BE132S4**	**A412_16.1 P132 BX132S4**	283
93	531	3.4	15.7	27700	**A552_15.7 S4 ME4SB4**	**A552_15.7 S4 MX4SB4**	290	**A552_15.7 P132 BE132S4**	**A552_15.7 P132 BX132S4**	291
106	466	1.3	13.8	8940	**A412_13.8 S4 ME4SB4**	**A412_13.8 S4 MX4SB4**	282	**A412_13.8 P132 BE132S4**	**A412_13.8 P132 BX132S4**	283
111	444	2.5	13.1	12800	**A502_13.1 S4 ME4SB4**	**A502_13.1 S4 MX4SB4**	286	**A502_13.1 P132 BE132S4**	**A502_13.1 P132 BX132S4**	287
124	397	1.4	11.7	8670	**A412_11.7 S4 ME4SB4**	**A412_11.7 S4 MX4SB4**	282	**A412_11.7 P132 BE132S4**	**A412_11.7 P132 BX132S4**	283
124	399	1.0	11.8	6450	**A352_11.8 S4 ME4SB4**	**A352_11.8 S4 MX4SB4**	278	**A352_11.8 P132 BE132S4**	**A352_11.8 P132 BX132S4**	279
138	360	1.1	10.6	6360	**A352_10.6 S4 ME4SB4**	**A352_10.6 S4 MX4SB4**	278	**A352_10.6 P132 BE132S4**	**A352_10.6 P132 BX132S4**	279
144	343	1.6	10.1	8440	**A412_10.1 S4 ME4SB4**	**A412_10.1 S4 MX4SB4**	282	**A412_10.1 P132 BE132S4**	**A412_10.1 P132 BX132S4**	283
150	329	3.0	9.7	11800	**A502_9.7 S4 ME4SB4**	**A502_9.7 S4 MX4SB4**	286	**A502_9.7 P132 BE132S4**	**A502_9.7 P132 BX132S4**	287
157	315	1.3	9.3	6240	**A352_9.3 S4 ME4SB4**	**A352_9.3 S4 MX4SB4**	278	**A352_9.3 P132 BE132S4**	**A352_9.3 P132 BX132S4**	279
159	311	1.8	9.2	8250	**A412_9.2 S4 ME4SB4**	**A412_9.2 S4 MX4SB4**	282	**A412_9.2 P132 BE132S4**	**A412_9.2 P132 BX132S4**	283
173	286	1.3	8.5	6140	**A352_8.5 S4 ME4SB4**	**A352_8.5 S4 MX4SB4**	278	**A352_8.5 P132 BE132S4**	**A352_8.5 P132 BX132S4**	279
175	282	2.0	8.3	8080	**A412_8.3 S4 ME4SB4**	**A412_8.3 S4 MX4SB4**	282	**A412_8.3 P132 BE132S4**	**A412_8.3 P132 BX132S4**	283
205	241	2.3	7.1	7790	**A412_7.1 S4 ME4SB4**	**A412_7.1 S4 MX4SB4**	282	**A412_7.1 P132 BE132S4**	**A412_7.1 P132 BX132S4**	283
208	238	1.6	7.0	5930	**A352_7.0 S4 ME4SB4**	**A352_7.0 S4 MX4SB4**	278	**A352_7.0 P132 BE132S4**	**A352_7.0 P132 BX132S4**	279
228	217	1.6	6.4	5820	**A352_6.4 S4 ME4SB4**	**A352_6.4 S4 MX4SB4**	278	**A352_6.4 P132 BE132S4**	**A352_6.4 P132 BX132S4**	279
249	198	2.8	11.7	7430	**A412_11.7 S4 ME4SB2**		282	**A412_11.7 P132 BE132SA2**		283
270	183	1.9	5.4	5610	**A352_5.4 S4 ME4SB4**	**A352_5.4 S4 MX4SB4**	278	**A352_5.4 P132 BE132S4**	**A352_5.4 P132 BX132S4**	279
289	171	2.5	10.1	7170	**A412_10.1 S4 ME4SB2**		282	**A412_10.1 P132 BE132SA2**		283
416	119	3.1	7.0	5060	**A352_7.0 S4 ME4SB2**		278	**A352_7.0 P132 BE132SA2**		279

7.5 kW

n_2 min-1	M_2 Nm	S	i	R_{n2} N	IE2	IE3		IE2	IE3	
4.1	15516	0.9	355.8	75000	**A904_355.8 S4 ME4LA4**	**A904_355.8 S4 MX4LA4**	304	**A904_355.8 P132 BE132MA4**	**A904_355.8 P132 BX132MA4**	305
4.8	13296	1.1	304.9	75000	**A904_304.9 S4 ME4LA4**	**A904_304.9 S4 MX4LA4**	304	**A904_304.9 P132 BE132MA4**	**A904_304.9 P132 BX132MA4**	305
5.2	12273	1.1	281.4	75000	**A904_281.4 S4 ME4LA4**	**A904_281.4 S4 MX4LA4**	304	**A904_281.4 P132 BE132MA4**	**A904_281.4 P132 BX132MA4**	305
6.4	9875	1.4	226.4	75000	**A904_226.4 S4 ME4LA4**	**A904_226.4 S4 MX4LA4**	304	**A904_226.4 P132 BE132MA4**	**A904_226.4 P132 BX132MA4**	305
7.0	9115	1.5	209.0	75000	**A904_209.0 S4 ME4LA4**	**A904_209.0 S4 MX4LA4**	304	**A904_209.0 P132 BE132MA4**	**A904_209.0 P132 BX132MA4**	305
8.1	7849	1.8	180.0	75000	**A904_180.0 S4 ME4LA4**	**A904_180.0 S4 MX4LA4**	304	**A904_180.0 P132 BE132MA4**	**A904_180.0 P132 BX132MA4**	305
8.5	7470	1.1	171.3	65000	**A804_171.3 S4 ME4LA4**	**A804_171.3 S4 MX4LA4**	301	**A804_171.3 P132 BE132MA4**	**A804_171.3 P132 BX132MA4**	302
8.8	7245	1.9	166.1	75000	**A904_166.1 S4 ME4LA4**	**A904_166.1 S4 MX4LA4**	304	**A904_166.1 P132 BE132MA4**	**A904_166.1 P132 BX132MA4**	305
9.3	6992	1.1	156.8	65000	**A803_156.8 S4 ME4LA4**	**A803_156.8 S4 MX4LA4**	301	**A803_156.8 P132 BE132MA4**	**A803_156.8 P132 BX132MA4**	302
9.6	6733	2.0	151.0	75000	**A903_151.0 S4 ME4LA4**	**A903_151.0 S4 MX4LA4**	304	**A903_151.0 P132 BE132MA4**	**A903_151.0 P132 BX132MA4**	305
10.1	6454	1.2	144.7	65000	**A803_144.7 S4 ME4LA4**	**A803_144.7 S4 MX4LA4**	301	**A803_144.7 P132 BE132MA4**	**A803_144.7 P132 BX132MA4**	302
10.4	6216	2.1	139.4	75000	**A903_139.4 S4 ME4LA4**	**A903_139.4 S4 MX4LA4**	304	**A903_139.4 P132 BE132MA4**	**A903_139.4 P132 BX132MA4**	305
11.5	5647	2.3	126.6	75000	**A903_126.6 S4 ME4LA4**	**A903_126.6 S4 MX4LA4**	304	**A903_126.6 P132 BE132MA4**	**A903_126.6 P132 BX132MA4**	305
11.6	5601	1.4	125.6	65000	**A803_125.6 S4 ME4LA4**	**A803_125.6 S4 MX4LA4**	301	**A803_125.6 P132 BE132MA4**	**A803_125.6 P132 BX132MA4**	302
12.1	5378	0.9	120.6	50000	**A703_120.6 S4 ME4LA4**	**A703_120.6 S4 MX4LA4**	298	**A703_120.6 P132 BE132MA4**	**A703_120.6 P132 BX132MA4**	299
12.4	5213	2.7	116.9	75000	**A903_116.9 S4 ME4LA4**	**A903_116.9 S4 MX4LA4**	304	**A903_116.9 P132 BE132MA4**	**A903_116.9 P132 BX132MA4**	305
12.5	5170	1.5	116.0	65000	**A803_116.0 S4 ME4LA4**	**A803_116.0 S4 MX4LA4**	301	**A803_116.0 P132 BE132MA4**	**A803_116.0 P132 BX132MA4**	302
13.6	4763	2.9	106.8	75000	**A903_106.8 S4 ME4LA4**	**A903_106.8 S4 MX4LA4**	304	**A903_106.8 P132 BE132MA4**	**A903_106.8 P132 BX132MA4**	305

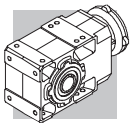

7.5 kW

n_2 min-1	M_2 Nm	S	i	R_{n2} N	IE2	IE3		IE2	IE3	
14.0	4648	1.1	104.2	50000	**A703_104.2 S4 ME4LA4**	**A703_104.2 S4 MX4LA4**	298	**A703_104.2 P132 BE132MA4**	**A703_104.2 P132 BX132MA4**	299
14.0	4639	1.7	104.0	65000	**A803_104.0 S4 ME4LA4**	**A803_104.0 S4 MX4LA4**	301	**A803_104.0 P132 BE132MA4**	**A803_104.0 P132 BX132MA4**	302
14.8	4397	3.2	98.6	75000	**A903_98.6 S4 ME4LA4**	**A903_98.6 S4 MX4LA4**	304	**A903_98.6 P132 BE132MA4**	**A903_98.6 P132 BX132MA4**	305
15.1	4290	1.2	96.2	50000	**A703_96.2 S4 ME4LA4**	**A703_96.2 S4 MX4LA4**	298	**A703_96.2 P132 BE132MA4**	**A703_96.2 P132 BX132MA4**	299
15.2	4282	1.9	96.0	65000	**A803_96.0 S4 ME4LA4**	**A803_96.0 S4 MX4LA4**	301	**A803_96.0 P132 BE132MA4**	**A803_96.0 P132 BX132MA4**	302
16.3	3977	2.0	89.2	65000	**A803_89.2 S4 ME4LA4**	**A803_89.2 S4 MX4LA4**	301	**A803_89.2 P132 BE132MA4**	**A803_89.2 P132 BX132MA4**	302
16.9	3832	1.3	85.9	50000	**A703_85.9 S4 ME4LA4**	**A703_85.9 S4 MX4LA4**	298	**A703_85.9 P132 BE132MA4**	**A703_85.9 P132 BX132MA4**	299
17.7	3671	2.2	82.3	65000	**A803_82.3 S4 ME4LA4**	**A803_82.3 S4 MX4LA4**	301	**A803_82.3 P132 BE132MA4**	**A803_82.3 P132 BX132MA4**	302
18.3	3537	1.4	79.3	50000	**A703_79.3 S4 ME4LA4**	**A703_79.3 S4 MX4LA4**	298	**A703_79.3 P132 BE132MA4**	**A703_79.3 P132 BX132MA4**	299
20.1	3234	1.5	72.5	50000	**A703_72.5 S4 ME4LA4**	**A703_72.5 S4 MX4LA4**	298	**A703_72.5 P132 BE132MA4**	**A703_72.5 P132 BX132MA4**	299
20.1	3227	2.5	72.4	65000	**A803_72.4 S4 ME4LA4**	**A803_72.4 S4 MX4LA4**	301	**A803_72.4 P132 BE132MA4**	**A803_72.4 P132 BX132MA4**	302
20.7	3139	0.9	70.4	30000	**A603_70.4 S4 ME4LA4**	**A603_70.4 S4 MX4LA4**	294	**A603_70.4 P132 BE132MA4**	**A603_70.4 P132 BX132MA4**	295
21.7	2985	1.7	66.9	50000	**A703_66.9 S4 ME4LA4**	**A703_66.9 S4 MX4LA4**	298	**A703_66.9 P132 BE132MA4**	**A703_66.9 P132 BX132MA4**	299
21.8	2979	2.7	66.8	65000	**A803_66.8 S4 ME4LA4**	**A803_66.8 S4 MX4LA4**	301	**A803_66.8 P132 BE132MA4**	**A803_66.8 P132 BX132MA4**	302
22.4	2898	1.0	65.0	30000	**A603_65.0 S4 ME4LA4**	**A603_65.0 S4 MX4LA4**	294	**A603_65.0 P132 BE132MA4**	**A603_65.0 P132 BX132MA4**	295
24.3	2666	3.0	59.8	63800	**A803_59.8 S4 ME4LA4**	**A803_59.8 S4 MX4LA4**	301	**A803_59.8 P132 BE132MA4**	**A803_59.8 P132 BX132MA4**	302
25.2	2571	1.9	57.7	50000	**A703_57.7 S4 ME4LA4**	**A703_57.7 S4 MX4LA4**	298	**A703_57.7 P132 BE132MA4**	**A703_57.7 P132 BX132MA4**	299
26.2	2479	1.1	55.6	30000	**A603_55.6 S4 ME4LA4**	**A603_55.6 S4 MX4LA4**	294	**A603_55.6 P132 BE132MA4**	**A603_55.6 P132 BX132MA4**	295
26.4	2461	3.2	55.2	62600	**A803_55.2 S4 ME4LA4**	**A803_55.2 S4 MX4LA4**	301	**A803_55.2 P132 BE132MA4**	**A803_55.2 P132 BX132MA4**	302
27.3	2374	2.1	53.2	50000	**A703_53.2 S4 ME4LA4**	**A703_53.2 S4 MX4LA4**	298	**A703_53.2 P132 BE132MA4**	**A703_53.2 P132 BX132MA4**	299
28.3	2289	1.2	51.3	30000	**A603_51.3 S4 ME4LA4**	**A603_51.3 S4 MX4LA4**	294	**A603_51.3 P132 BE132MA4**	**A603_51.3 P132 BX132MA4**	295
29.7	2185	2.3	49.0	50000	**A703_49.0 S4 ME4LA4**	**A703_49.0 S4 MX4LA4**	298	**A703_49.0 P132 BE132MA4**	**A703_49.0 P132 BX132MA4**	299
32	2017	2.4	45.2	50000	**A703_45.2 S4 ME4LA4**	**A703_45.2 S4 MX4LA4**	298	**A703_45.2 P132 BE132MA4**	**A703_45.2 P132 BX132MA4**	299
32	2015	1.4	45.2	30000	**A603_45.2 S4 ME4LA4**	**A603_45.2 S4 MX4LA4**	294	**A603_45.2 P132 BE132MA4**	**A603_45.2 P132 BX132MA4**	295
35	1860	1.5	41.7	30000	**A603_41.7 S4 ME4LA4**	**A603_41.7 S4 MX4LA4**	294	**A603_41.7 P132 BE132MA4**	**A603_41.7 P132 BX132MA4**	295
36	1797	1.1	40.3	30000	**A553_40.3 S4 ME4LA4**	**A553_40.3 S4 MX4LA4**	290	**A553_40.3 P132 BE132MA4**	**A553_40.3 P132 BX132MA4**	291
38	1712	2.8	38.4	50000	**A703_38.4 S4 ME4LA4**	**A703_38.4 S4 MX4LA4**	298	**A703_38.4 P132 BE132MA4**	**A703_38.4 P132 BX132MA4**	299
41	1587	0.9	35.6	10100	**A503_35.6 S4 ME4LA4**	**A503_35.6 S4 MX4LA4**	286	**A503_35.6 P132 BE132MA4**	**A503_35.6 P132 BX132MA4**	287
41	1580	2.8	35.4	50000	**A703_35.4 S4 ME4LA4**	**A703_35.4 S4 MX4LA4**	298	**A703_35.4 P132 BE132MA4**	**A703_35.4 P132 BX132MA4**	299
42	1529	1.8	34.3	30000	**A603_34.3 S4 ME4LA4**	**A603_34.3 S4 MX4LA4**	294	**A603_34.3 P132 BE132MA4**	**A603_34.3 P132 BX132MA4**	295
45	1444	1.0	32.4	10300	**A503_32.4 S4 ME4LA4**	**A503_32.4 S4 MX4LA4**	286	**A503_32.4 P132 BE132MA4**	**A503_32.4 P132 BX132MA4**	287
46	1412	2.0	31.7	30000	**A603_31.7 S4 ME4LA4**	**A603_31.7 S4 MX4LA4**	294	**A603_31.7 P132 BE132MA4**	**A603_31.7 P132 BX132MA4**	295
49	1335	1.5	29.9	30000	**A553_29.9 S4 ME4LA4**	**A553_29.9 S4 MX4LA4**	290	**A553_29.9 P132 BE132MA4**	**A553_29.9 P132 BX132MA4**	291
52	1242	2.3	27.9	30000	**A603_27.9 S4 ME4LA4**	**A603_27.9 S4 MX4LA4**	294	**A603_27.9 P132 BE132MA4**	**A603_27.9 P132 BX132MA4**	295
55	1179	1.3	26.4	10700	**A503_26.4 S4 ME4LA4**	**A503_26.4 S4 MX4LA4**	286	**A503_26.4 P132 BE132MA4**	**A503_26.4 P132 BX132MA4**	287
57	1146	2.4	25.7	30000	**A603_25.7 S4 ME4LA4**	**A603_25.7 S4 MX4LA4**	294	**A603_25.7 P132 BE132MA4**	**A603_25.7 P132 BX132MA4**	295
61	1072	1.4	24.0	10800	**A503_24.0 S4 ME4LA4**	**A503_24.0 S4 MX4LA4**	286	**A503_24.0 P132 BE132MA4**	**A503_24.0 P132 BX132MA4**	287
61	1061	1.8	23.8	28800	**A553_23.8 S4 ME4LA4**	**A553_23.8 S4 MX4LA4**	290	**A553_23.8 P132 BE132MA4**	**A553_23.8 P132 BX132MA4**	291
70	963	1.2	20.9	13700	**A502_20.9 S4 ME4LA4**	**A502_20.9 S4 MX4LA4**	286	**A502_20.9 P132 BE132MA4**	**A502_20.9 P132 BX132MA4**	287
71	949	2.1	20.6	30000	**A602_20.6 S4 ME4LA4**	**A602_20.6 S4 MX4LA4**	294	**A602_20.6 P132 BE132MA4**	**A602_20.6 P132 BX132MA4**	295
76	886	2.0	19.2	28800	**A552_19.2 S4 ME4LA4**	**A552_19.2 S4 MX4LA4**	290	**A552_19.2 P132 BE132MA4**	**A552_19.2 P132 BX132MA4**	291
87	771	2.6	16.7	30000	**A602_16.7 S4 ME4LA4**	**A602_16.7 S4 MX4LA4**	294	**A602_16.7 P132 BE132MA4**	**A602_16.7 P132 BX132MA4**	295
88	763	1.6	16.6	13000	**A502_16.6 S4 ME4LA4**	**A502_16.6 S4 MX4LA4**	286	**A502_16.6 P132 BE132MA4**	**A502_16.6 P132 BX132MA4**	287
93	722	2.5	15.7	27300	**A552_15.7 S4 ME4LA4**	**A552_15.7 S4 MX4LA4**	290	**A552_15.7 P132 BE132MA4**	**A552_15.7 P132 BX132MA4**	291
106	634	0.9	13.8	8130	**A412_13.8 S4 ME4LA4**	**A412_13.8 S4 MX4LA4**	282	**A412_13.8 P132 BE132MA4**	**A412_13.8 P132 BX132MA4**	283
111	604	1.8	13.1	12300	**A502_13.1 S4 ME4LA4**	**A502_13.1 S4 MX4LA4**	286	**A502_13.1 P132 BE132MA4**	**A502_13.1 P132 BX132MA4**	287
111	602	3.0	13.1	26100	**A552_13.1 S4 ME4LA4**	**A552_13.1 S4 MX4LA4**	290	**A552_13.1 P132 BE132MA4**	**A552_13.1 P132 BX132MA4**	291
115	585	3.4	12.7	30000	**A602_12.7 S4 ME4LA4**	**A602_12.7 S4 MX4LA4**	294	**A602_12.7 P132 BE132MA4**	**A602_12.7 P132 BX132MA4**	295
124	541	1.0	11.7	7970	**A412_11.7 S4 ME4LA4**	**A412_11.7 S4 MX4LA4**	282	**A412_11.7 P132 BE132MA4**	**A412_11.7 P132 BX132MA4**	283
144	467	1.1	10.1	7850	**A412_10.1 S4 ME4LA4**	**A412_10.1 S4 MX4LA4**	282	**A412_10.1 P132 BE132MA4**	**A412_10.1 P132 BX132MA4**	283
149	448	2.2	9.7	11500	**A502_9.7 S4 ME4LA4**	**A502_9.7 S4 MX4LA4**	286	**A502_9.7 P132 BE132MA4**	**A502_9.7 P132 BX132MA4**	287
156	429	0.9	9.3	5650	**A352_9.3 S4 ME4LA4**	**A352_9.3 S4 MX4LA4**	278	**A352_9.3 P132 BE132MA4**	**A352_9.3 P132 BX132MA4**	279
158	424	1.3	9.2	7710	**A412_9.2 S4 ME4LA4**	**A412_9.2 S4 MX4LA4**	282	**A412_9.2 P132 BE132MA4**	**A412_9.2 P132 BX132MA4**	283
172	390	1.0	8.5	5600	**A352_8.5 S4 ME4LA4**	**A352_8.5 S4 MX4LA4**	278	**A352_8.5 P132 BE132MA4**	**A352_8.5 P132 BX132MA4**	279
175	384	1.4	8.3	7590	**A412_8.3 S4 ME4LA4**	**A412_8.3 S4 MX4LA4**	282	**A412_8.3 P132 BE132MA4**	**A412_8.3 P132 BX132MA4**	283
188	356	2.7	7.7	10800	**A502_7.7 S4 ME4LA4**	**A502_7.7 S4 MX4LA4**	286	**A502_7.7 P132 BE132MA4**	**A502_7.7 P132 BX132MA4**	287
204	328	1.7	7.1	7370	**A412_7.1 S4 ME4LA4**	**A412_7.1 S4 MX4LA4**	282	**A412_7.1 P132 BE132MA4**	**A412_7.1 P132 BX132MA4**	283
207	323	1.1	7.0	5490	**A352_7.0 S4 ME4LA4**	**A352_7.0 S4 MX4LA4**	278	**A352_7.0 P132 BE132MA4**	**A352_7.0 P132 BX132MA4**	279
227	295	1.2	6.4	5420	**A352_6.4 S4 ME4LA4**	**A352_6.4 S4 MX4LA4**	278	**A352_6.4 P132 BE132MA4**	**A352_6.4 P132 BX132MA4**	279
269	249	1.4	5.4	5270	**A352_5.4 S4 ME4LA4**	**A352_5.4 S4 MX4LA4**	278	**A352_5.4 P132 BE132MA4**	**A352_5.4 P132 BX132MA4**	279
277	242	2.3	5.2	6920	**A412_5.2 S4 ME4LA4**	**A412_5.2 S4 MX4LA4**	282	**A412_5.2 P132 BE132MA4**	**A412_5.2 P132 BX132MA4**	283
318	212	2.5	9.2	6710	**A412_9.2 S4 ME4LA2**		282	**A412_9.2 P132 BE132SB2**		283
351	192	2.7	8.3	6550	**A412_8.3 S4 ME4LA2**		282	**A412_8.3 P132 BE132SB2**		283
416	162	2.3	7.0	4830	**A352_7.0 S4 ME4LA2**		278	**A352_7.0 P132 BE132SB2**		279
540	125	2.7	5.4	4550	**A352_5.4 S4 ME4LA2**		278	**A352_5.4 P132 BE132SB2**		279

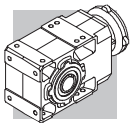

9.2 kW

n_2 min-1	M_2 Nm	S	i	R_{n2} N	IE2	IE3		IEC IE2	IEC IE3	
5.2	15279	0.9	281.4	75000	**A904_281.4 S4 ME4LB4**		304	**A904_281.4 P132 BE132MB4**	**A904_281.4 P160 BX160MA4**	305
6.4	12293	1.1	226.4	75000	**A904_226.4 S4 ME4LB4**		304	**A904_226.4 P132 BE132MB4**	**A904_226.4 P160 BX160MA4**	305
6.9	11347	1.2	209.0	75000	**A904_209.0 S4 ME4LB4**		304	**A904_209.0 P132 BE132MB4**	**A904_209.0 P160 BX160MA4**	305
8.1	9771	1.4	180.0	75000	**A904_180.0 S4 ME4LB4**		304	**A904_180.0 P132 BE132MB4**	**A904_180.0 P160 BX160MA4**	305
8.5	9300	0.9	171.3	65000	**A804_171.3 S4 ME4LB4**		301	**A804_171.3 P132 BE132MB4**		302
8.7	9019	1.6	166.1	75000	**A904_166.1 S4 ME4LB4**		304	**A904_166.1 P132 BE132MB4**	**A904_166.1 P160 BX160MA4**	305
9.2	8704	0.9	156.8	65000	**A803_156.8 S4 ME4LB4**	**A803_156.8 S5 MX5SA4**	301	**A803_156.8 P132 BE132MB4**	**A803_156.8 P160 BX160MA4**	302
9.6	8383	1.6	151.0	75000	**A903_151.0 S4 ME4LB4**	**A903_151.0 S5 MX5SA4**	304	**A903_151.0 P132 BE132MB4**	**A903_151.0 P160 BX160MA4**	305
10.0	8034	1.0	144.7	65000	**A803_144.7 S4 ME4LB4**	**A803_144.7 S5 MX5SA4**	301	**A803_144.7 P132 BE132MB4**	**A803_144.7 P160 BX160MA4**	302
10.4	7738	1.6	139.4	75000	**A903_139.4 S4 ME4LB4**	**A903_139.4 S5 MX5SA4**	304	**A903_139.4 P132 BE132MB4**	**A903_139.4 P160 BX160MA4**	305
11.4	7030	1.9	126.6	75000	**A903_126.6 S4 ME4LB4**	**A903_126.6 S5 MX5SA4**	304	**A903_126.6 P132 BE132MB4**	**A903_126.6 P160 BX160MA4**	305
11.5	6973	1.1	125.6	65000	**A803_125.6 S4 ME4LB4**	**A803_125.6 S5 MX5SA4**	301	**A803_125.6 P132 BE132MB4**	**A803_125.6 P160 BX160MA4**	302
12.4	6489	2.2	116.9	75000	**A903_116.9 S4 ME4LB4**	**A903_116.9 S5 MX5SA4**	304	**A903_116.9 P132 BE132MB4**	**A903_116.9 P160 BX160MA4**	305
12.5	6437	1.2	116.0	65000	**A803_116.0 S4 ME4LB4**	**A803_116.0 S5 MX5SA4**	301	**A803_116.0 P132 BE132MB4**	**A803_116.0 P160 BX160MA4**	302
13.6	5930	2.4	106.8	75000	**A903_106.8 S4 ME4LB4**	**A903_106.8 S5 MX5SA4**	304	**A903_106.8 P132 BE132MB4**	**A903_106.8 P160 BX160MA4**	305
13.9	5775	1.4	104.0	65000	**A803_104.0 S4 ME4LB4**	**A803_104.0 S5 MX5SA4**	301	**A803_104.0 P132 BE132MB4**	**A803_104.0 P160 BX160MA4**	302
14.7	5473	2.6	98.6	75000	**A903_98.6 S4 ME4LB4**	**A903_98.6 S5 MX5SA4**	304	**A903_98.6 P132 BE132MB4**	**A903_98.6 P160 BX160MA4**	305
15.1	5341	0.9	96.2	50000	**A703_96.2 S4 ME4LB4**	**A703_96.2 S5 MX5SA4**	298	**A703_96.2 P132 BE132MB4**	**A703_96.2 P160 BX160MA4**	299
15.1	5331	1.5	96.0	65000	**A803_96.0 S4 ME4LB4**	**A803_96.0 S5 MX5SA4**	301	**A803_96.0 P132 BE132MB4**	**A803_96.0 P160 BX160MA4**	302
16.3	4950	1.6	89.2	65000	**A803_89.2 S4 ME4LB4**	**A803_89.2 S5 MX5SA4**	301	**A803_89.2 P132 BE132MB4**	**A803_89.2 P160 BX160MA4**	302
16.7	4833	2.9	87.1	75000	**A903_87.1 S4 ME4LB4**	**A903_87.1 S5 MX5SA4**	304	**A903_87.1 P132 BE132MB4**	**A903_87.1 P160 BX160MA4**	305
16.9	4770	1.0	85.9	50000	**A703_85.9 S4 ME4LB4**	**A703_85.9 S5 MX5SA4**	298	**A703_85.9 P132 BE132MB4**	**A703_85.9 P160 BX160MA4**	299
17.6	4570	1.8	82.3	65000	**A803_82.3 S4 ME4LB4**	**A803_82.3 S5 MX5SA4**	301	**A803_82.3 P132 BE132MB4**	**A803_82.3 P160 BX160MA4**	302
18.0	4461	3.1	80.4	75000	**A903_80.4 S4 ME4LB4**	**A903_80.4 S5 MX5SA4**	304	**A903_80.4 P132 BE132MB4**	**A903_80.4 P160 BX160MA4**	305
18.3	4403	1.1	79.3	50000	**A703_79.3 S4 ME4LB4**	**A703_79.3 S5 MX5SA4**	298	**A703_79.3 P132 BE132MB4**	**A703_79.3 P160 BX160MA4**	299
19.5	4134	3.4	74.5	75000	**A903_74.5 S4 ME4LB4**	**A903_74.5 S5 MX5SA4**	304	**A903_74.5 P132 BE132MB4**	**A903_74.5 P160 BX160MA4**	305
20.0	4026	1.2	72.5	50000	**A703_72.5 S4 ME4LB4**	**A703_72.5 S5 MX5SA4**	298	**A703_72.5 P132 BE132MB4**	**A703_72.5 P160 BX160MA4**	299
20.0	4017	2.0	72.4	65000	**A803_72.4 S4 ME4LB4**	**A803_72.4 S5 MX5SA4**	301	**A803_72.4 P132 BE132MB4**	**A803_72.4 P160 BX160MA4**	302
21.7	3716	1.3	66.9	50000	**A703_66.9 S4 ME4LB4**	**A703_66.9 S5 MX5SA4**	298	**A703_66.9 P132 BE132MB4**	**A703_66.9 P160 BX160MA4**	299
21.7	3708	2.2	66.8	63800	**A803_66.8 S4 ME4LB4**	**A803_66.8 S5 MX5SA4**	301	**A803_66.8 P132 BE132MB4**	**A803_66.8 P160 BX160MA4**	302
24.3	3318	2.4	59.8	62400	**A803_59.8 S4 ME4LB4**	**A803_59.8 S5 MX5SA4**	301	**A803_59.8 P132 BE132MB4**	**A803_59.8 P160 BX160MA4**	302
25.1	3201	1.6	57.7	50000	**A703_57.7 S4 ME4LB4**	**A703_57.7 S5 MX5SA4**	298	**A703_57.7 P132 BE132MB4**	**A703_57.7 P160 BX160MA4**	299
26.1	3087	0.9	55.6	30000	**A603_55.6 S4 ME4LB4**	**A603_55.6 S5 MX5SA4**	294	**A603_55.6 P132 BE132MB4**	**A603_55.6 P160 BX160MA4**	295
26.3	3063	2.6	55.2	61300	**A803_55.2 S4 ME4LB4**	**A803_55.2 S5 MX5SA4**	301	**A803_55.2 P132 BE132MB4**	**A803_55.2 P160 BX160MA4**	302
27.2	2955	1.7	53.2	50000	**A703_53.2 S4 ME4LB4**	**A703_53.2 S5 MX5SA4**	298	**A703_53.2 P132 BE132MB4**	**A703_53.2 P160 BX160MA4**	299
28.3	2849	1.0	51.3	30000	**A603_51.3 S4 ME4LB4**	**A603_51.3 S5 MX5SA4**	294	**A603_51.3 P132 BE132MB4**	**A603_51.3 P160 BX160MA4**	295
29.6	2720	1.8	49.0	50000	**A703_49.0 S4 ME4LB4**	**A703_49.0 S5 MX5SA4**	298	**A703_49.0 P132 BE132MB4**	**A703_49.0 P160 BX160MA4**	299
30	2675	3.0	48.2	59500	**A803_48.2 S4 ME4LB4**	**A803_48.2 S5 MX5SA4**	301	**A803_48.2 P132 BE132MB4**	**A803_48.2 P160 BX160MA4**	302
32	2511	1.9	45.2	50000	**A703_45.2 S4 ME4LB4**	**A703_45.2 S5 MX5SA4**	298	**A703_45.2 P132 BE132MB4**	**A703_45.2 P160 BX160MA4**	299
32	2508	1.1	45.2	30000	**A603_45.2 S4 ME4LB4**	**A603_45.2 S5 MX5SA4**	294	**A603_45.2 P132 BE132MB4**	**A603_45.2 P160 BX160MA4**	295
33	2469	3.0	44.5	58400	**A803_44.5 S4 ME4LB4**	**A803_44.5 S5 MX5SA4**	301	**A803_44.5 P132 BE132MB4**	**A803_44.5 P160 BX160MA4**	302
35	2315	1.2	41.7	30000	**A603_41.7 S4 ME4LB4**	**A603_41.7 S5 MX5SA4**	294	**A603_41.7 P132 BE132MB4**	**A603_41.7 P160 BX160MA4**	295
38	2131	2.3	38.4	50000	**A703_38.4 S4 ME4LB4**	**A703_38.4 S5 MX5SA4**	298	**A703_38.4 P132 BE132MB4**	**A703_38.4 P160 BX160MA4**	299
41	1967	2.3	35.4	50000	**A703_35.4 S4 ME4LB4**	**A703_35.4 S5 MX5SA4**	298	**A703_35.4 P132 BE132MB4**	**A703_35.4 P160 BX160MA4**	299
42	1904	1.5	34.3	30000	**A603_34.3 S4 ME4LB4**	**A603_34.3 S5 MX5SA4**	294	**A603_34.3 P132 BE132MB4**	**A603_34.3 P160 BX160MA4**	295
46	1758	1.6	31.7	30000	**A603_31.7 S4 ME4LB4**	**A603_31.7 S5 MX5SA4**	294	**A603_31.7 P132 BE132MB4**	**A603_31.7 P160 BX160MA4**	295
48	1661	1.2	29.9	29100	**A553_29.9 S4 ME4LB4**	**A553_29.9 S5 MX5SA4**	290	**A553_29.9 P132 BE132MB4**	**A553_29.9 P160 BX160MA4**	291
52	1546	1.8	27.9	30000	**A603_27.9 S4 ME4LB4**	**A603_27.9 S5 MX5SA4**	294	**A603_27.9 P132 BE132MB4**	**A603_27.9 P160 BX160MA4**	295
55	1468	1.0	26.4	9130	**A503_26.4 S4 ME4LB4**	**A503_26.4 S5 MX5SA4**	286	**A503_26.4 P132 BE132MB4**	**A503_26.4 P160 BX160MA4**	287
56	1427	2.0	25.7	30000	**A603_25.7 S4 ME4LB4**	**A603_25.7 S5 MX5SA4**	294	**A603_25.7 P132 BE132MB4**	**A603_25.7 P160 BX160MA4**	295
60	1335	1.1	24.0	9370	**A503_24.0 S4 ME4LB4**	**A503_24.0 S5 MX5SA4**	286	**A503_24.0 P132 BE132MB4**	**A503_24.0 P160 BX160MA4**	287
61	1321	1.5	23.8	27900	**A553_23.8 S4 ME4LB4**	**A553_23.8 S5 MX5SA4**	290	**A553_23.8 P132 BE132MB4**	**A553_23.8 P160 BX160MA4**	291
68	1183	3.4	21.3	46000	**A703_21.3 S4 ME4LB4**	**A703_21.3 S5 MX5SA4**	298	**A703_21.3 P132 BE132MB4**	**A703_21.3 P160 BX160MA4**	299
69	1199	1.0	20.9	13000	**A502_20.9 S4 ME4LB4**	**A502_20.9 S5 MX5SA4**	286	**A502_20.9 P132 BE132MB4**	**A502_20.9 P160 BX160MA4**	287
70	1181	1.7	20.6	30000	**A602_20.6 S4 ME4LB4**	**A602_20.6 S5 MX5SA4**	294	**A602_20.6 P132 BE132MB4**	**A602_20.6 P160 BX160MA4**	295
74	1092	3.4	19.7	45100	**A703_19.7 S4 ME4LB4**	**A703_19.7 S5 MX5SA4**	298	**A703_19.7 P132 BE132MB4**	**A703_19.7 P160 BX160MA4**	299
75	1103	1.6	19.2	28400	**A552_19.2 S4 ME4LB4**	**A552_19.2 S5 MX5SA4**	290	**A552_19.2 P132 BE132MB4**	**A552_19.2 P160 BX160MA4**	291

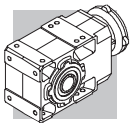

9.2 kW

n_2 min-1	M_2 Nm	S	i	R_{n2} N	IE2	IE3		IE2	IE3	
87	960	2.1	16.7	30000	**A602_16.7 S4 ME4LB4**	**A602_16.7 S5 MX5SA4**	294	**A602_16.7 P132 BE132MB4**	**A602_16.7 P160 BX160MA4**	295
88	950	1.3	16.6	12500	**A502_16.6 S4 ME4LB4**	**A502_16.6 S5 MX5SA4**	286	**A502_16.6 P132 BE132MB4**	**A502_16.6 P160 BX160MA4**	287
92	899	2.0	15.7	27000	**A552_15.7 S4 ME4LB4**	**A552_15.7 S5 MX5SA4**	290	**A552_15.7 P132 BE132MB4**	**A552_15.7 P160 BX160MA4**	291
111	752	1.5	13.1	11900	**A502_13.1 S4 ME4LB4**	**A502_13.1 S5 MX5SA4**	286	**A502_13.1 P132 BE132MB4**	**A502_13.1 P160 BX160MA4**	287
111	750	2.4	13.1	25800	**A552_13.1 S4 ME4LB4**	**A552_13.1 S5 MX5SA4**	290	**A552_13.1 P132 BE132MB4**	**A552_13.1 P160 BX160MA4**	291
114	728	2.7	12.7	30000	**A602_12.7 S4 ME4LB4**	**A602_12.7 S5 MX5SA4**	294	**A602_12.7 P132 BE132MB4**	**A602_12.7 P160 BX160MA4**	295
123	651	2.5	23.8	24100	**A553_23.8 S4 ME4LB2**	**A553_23.8 S5 ME4LB2**	290	**A553_23.8 P132 BE132MB2**	**A553_23.8 P160 BE132MB2**	291
140	594	3.0	10.4	24200	**A552_10.4 S4 ME4LB4**	**A552_10.4 S5 MX5SA4**	290	**A552_10.4 P132 BE132MB4**	**A552_10.4 P160 BX160MA4**	291
141	592	3.4	10.3	30000	**A602_10.3 S4 ME4LB4**	**A602_10.3 S5 MX5SA4**	294	**A602_10.3 P132 BE132MB4**	**A602_10.3 P160 BX160MA4**	295
143	581	0.9	10.1	7340	**A412_10.1 S4 ME4LB4**		282	**A412_10.1 P132 BE132MB4**		283
149	558	1.8	9.7	11200	**A502_9.7 S4 ME4LB4**	**A502_9.7 S5 MX5SA4**	286	**A502_9.7 P132 BE132MB4**	**A502_9.7 P160 BX160MA4**	287
158	527	1.0	9.2	7250	**A412_9.2 S4 ME4LB4**		282	**A412_9.2 P132 BE132MB4**		283
174	478	1.2	8.3	7170	**A412_8.3 S4 ME4LB4**		282	**A412_8.3 P132 BE132MB4**		283
187	444	2.1	7.7	10600	**A502_7.7 S4 ME4LB4**	**A502_7.7 S5 MX5SA4**	286	**A502_7.7 P132 BE132MB4**	**A502_7.7 P160 BX160MA4**	287
204	408	1.3	7.1	7020	**A412_7.1 S4 ME4LB4**		282	**A412_7.1 P132 BE132MB4**		283
206	403	0.9	7.0	5110	**A352_7.0 S4 ME4LB4**		278	**A352_7.0 P132 BE132MB4**		279
226	368	1.0	6.4	5070	**A352_6.4 S4 ME4LB4**		278	**A352_6.4 P132 BE132MB4**		279
268	310	1.1	5.4	4980	**A352_5.4 S4 ME4LB4**		278	**A352_5.4 P132 BE132MB4**		279
276	301	1.8	5.2	6660	**A412_5.2 S4 ME4LB4**		282	**A412_5.2 P132 BE132MB4**		283
317	260	2.0	9.2	6480	**A412_9.2 S4 ME4LB2**		282	**A412_9.2 P132 BE132MB2**		283
377	219	3.4	7.7	8780	**A502_7.7 S4 ME4LB2**		286	**A502_7.7 P132 BE132MB2**		287
539	153	2.2	5.4	4410	**A352_5.4 S4 ME4LB2**		278	**A352_5.4 P132 BE132MB2**		279
557	148	3.0	5.2	5690	**A412_5.2 S4 ME4LB2**		282	**A412_5.2 P132 BE132MB2**		283

11 kW

n_2 min-1	M_2 Nm	S	i	R_{n2} N	IE2	IE3		IE2	IE3	
6.5	14510	1.0	226.4	75000	**A904_226.4 S5 ME5SA4**	**A904_226.4 S5 MX5SA4**	304	**A904_226.4 P160 BE160M4**	**A904_226.4 P160 BX160MB4**	305
7.0	13393	1.0	209.0	75000	**A904_209.0 S5 ME5SA4**	**A904_209.0 S5 MX5SA4**	304	**A904_209.0 P160 BE160M4**	**A904_209.0 P160 BX160MB4**	305
8.2	11533	1.2	180.0	75000	**A904_180.0 S5 ME5SA4**	**A904_180.0 S5 MX5SA4**	304	**A904_180.0 P160 BE160M4**	**A904_180.0 P160 BX160MB4**	305
8.8	10645	1.3	166.1	75000	**A904_166.1 S5 ME5SA4**	**A904_166.1 S5 MX5SA4**	304	**A904_166.1 P160 BE160M4**	**A904_166.1 P160 BX160MB4**	305
9.7	9894	1.4	151.0	75000	**A903_151.0 S5 ME5SA4**	**A903_151.0 S5 MX5SA4**	304	**A903_151.0 P160 BE160M4**	**A903_151.0 P160 BX160MB4**	305
10.5	9133	1.4	139.4	75000	**A903_139.4 S5 ME5SA4**	**A903_139.4 S5 MX5SA4**	304	**A903_139.4 P160 BE160M4**	**A903_139.4 P160 BX160MB4**	305
11.6	8298	1.6	126.6	75000	**A903_126.6 S5 ME5SA4**	**A903_126.6 S5 MX5SA4**	304	**A903_126.6 P160 BE160M4**	**A903_126.6 P160 BX160MB4**	305
11.7	8231	1.0	125.6	65000	**A803_125.6 S5 ME5SA4**	**A803_125.6 S5 MX5SA4**	301	**A803_125.6 P160 BE160M4**	**A803_125.6 P160 BX160MB4**	302
12.6	7660	1.8	116.9	75000	**A903_116.9 S5 ME5SA4**	**A903_116.9 S5 MX5SA4**	304	**A903_116.9 P160 BE160M4**	**A903_116.9 P160 BX160MB4**	305
12.7	7597	1.1	116.0	65000	**A803_116.0 S5 ME5SA4**	**A803_116.0 S5 MX5SA4**	301	**A803_116.0 P160 BE160M4**	**A803_116.0 P160 BX160MB4**	302
13.8	6999	2.0	106.8	75000	**A903_106.8 S5 ME5SA4**	**A903_106.8 S5 MX5SA4**	304	**A903_106.8 P160 BE160M4**	**A903_106.8 P160 BX160MB4**	305
14.1	6816	1.2	104.0	65000	**A803_104.0 S5 ME5SA4**	**A803_104.0 S5 MX5SA4**	301	**A803_104.0 P160 BE160M4**	**A803_104.0 P160 BX160MB4**	302
14.9	6460	2.2	98.6	75000	**A903_98.6 S5 ME5SA4**	**A903_98.6 S5 MX5SA4**	304	**A903_98.6 P160 BE160M4**	**A903_98.6 P160 BX160MB4**	305
15.3	6292	1.3	96.0	65000	**A803_96.0 S5 ME5SA4**	**A803_96.0 S5 MX5SA4**	301	**A803_96.0 P160 BE160M4**	**A803_96.0 P160 BX160MB4**	302
16.5	5843	1.4	89.2	65000	**A803_89.2 S5 ME5SA4**	**A803_89.2 S5 MX5SA4**	301	**A803_89.2 P160 BE160M4**	**A803_89.2 P160 BX160MB4**	302
16.9	5705	2.5	87.1	75000	**A903_87.1 S5 ME5SA4**	**A903_87.1 S5 MX5SA4**	304	**A903_87.1 P160 BE160M4**	**A903_87.1 P160 BX160MB4**	305
17.9	5394	1.5	82.3	64500	**A803_82.3 S5 ME5SA4**	**A803_82.3 S5 MX5SA4**	301	**A803_82.3 P160 BE160M4**	**A803_82.3 P160 BX160MB4**	302
18.3	5266	2.7	80.4	75000	**A903_80.4 S5 ME5SA4**	**A903_80.4 S5 MX5SA4**	304	**A903_80.4 P160 BE160M4**	**A903_80.4 P160 BX160MB4**	305
18.5	5198	1.0	79.3	50000	**A703_79.3 S5 ME5SA4**	**A703_79.3 S5 MX5SA4**	298	**A703_79.3 P160 BE160M4**	**A703_79.3 P160 BX160MB4**	299
19.7	4880	2.9	74.5	75000	**A903_74.5 S5 ME5SA4**	**A903_74.5 S5 MX5SA4**	304	**A903_74.5 P160 BE160M4**	**A903_74.5 P160 BX160MB4**	305
20.3	4752	1.1	72.5	50000	**A703_72.5 S5 ME5SA4**	**A703_72.5 S5 MX5SA4**	298	**A703_72.5 P160 BE160M4**	**A703_72.5 P160 BX160MB4**	299
20.3	4742	1.7	72.4	63200	**A803_72.4 S5 ME5SA4**	**A803_72.4 S5 MX5SA4**	301	**A803_72.4 P160 BE160M4**	**A803_72.4 P160 BX160MB4**	302
21.4	4505	3.1	68.8	75000	**A903_68.8 S5 ME5SA4**	**A903_68.8 S5 MX5SA4**	304	**A903_68.8 P160 BE160M4**	**A903_68.8 P160 BX160MB4**	305
22.0	4386	1.1	66.9	50000	**A703_66.9 S5 ME5SA4**	**A703_66.9 S5 MX5SA4**	298	**A703_66.9 P160 BE160M4**	**A703_66.9 P160 BX160MB4**	299

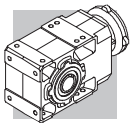

11 kW

n_2 min-1	M_2 Nm	S	i	R_{n2} N	IE2	IE3		IEC IE2	IEC IE3	
22.0	4377	1.8	66.8	62200	**A803_66.8 S5 ME5SA4**	**A803_66.8 S5 MX5SA4**	301	**A803_66.8 P160 BE160M4**	**A803_66.8 P160 BX160MB4**	302
24.6	3917	2.0	59.8	60900	**A803_59.8 S5 ME5SA4**	**A803_59.8 S5 MX5SA4**	301	**A803_59.8 P160 BE160M4**	**A803_59.8 P160 BX160MB4**	302
24.7	3906	3.6	59.6	75000	**A903_59.6 S5 ME5SA4**	**A903_59.6 S5 MX5SA4**	304	**A903_59.6 P160 BE160M4**	**A903_59.6 P160 BX160MB4**	305
25.5	3778	1.3	57.7	50000	**A703_57.7 S5 ME5SA4**	**A703_57.7 S5 MX5SA4**	298	**A703_57.7 P160 BE160M4**	**A703_57.7 P160 BX160MB4**	299
26.6	3615	2.2	55.2	59900	**A803_55.2 S5 ME5SA4**	**A803_55.2 S5 MX5SA4**	301	**A803_55.2 P160 BE160M4**	**A803_55.2 P160 BX160MB4**	302
27.6	3488	1.4	53.2	50000	**A703_53.2 S5 ME5SA4**	**A703_53.2 S5 MX5SA4**	298	**A703_53.2 P160 BE160M4**	**A703_53.2 P160 BX160MB4**	299
30	3210	1.6	49.0	50000	**A703_49.0 S5 ME5SA4**	**A703_49.0 S5 MX5SA4**	298	**A703_49.0 P160 BE160M4**	**A703_49.0 P160 BX160MB4**	299
31	3157	2.5	48.2	58300	**A803_48.2 S5 ME5SA4**	**A803_48.2 S5 MX5SA4**	301	**A803_48.2 P160 BE160M4**	**A803_48.2 P160 BX160MB4**	302
33	2964	1.6	45.2	50000	**A703_45.2 S5 ME5SA4**	**A703_45.2 S5 MX5SA4**	298	**A703_45.2 P160 BE160M4**	**A703_45.2 P160 BX160MB4**	299
33	2961	0.9	45.2	30000	**A603_45.2 S5 ME5SA4**	**A603_45.2 S5 MX5SA4**	294	**A603_45.2 P160 BE160M4**	**A603_45.2 P160 BX160MB4**	295
33	2914	2.6	44.5	57300	**A803_44.5 S5 ME5SA4**	**A803_44.5 S5 MX5SA4**	301	**A803_44.5 P160 BE160M4**	**A803_44.5 P160 BX160MB4**	302
35	2733	1.0	41.7	30000	**A603_41.7 S5 ME5SA4**	**A603_41.7 S5 MX5SA4**	294	**A603_41.7 P160 BE160M4**	**A603_41.7 P160 BX160MB4**	295
38	2523	3.0	38.5	55500				**A803_38.5 P160 BE160M4**	**A803_38.5 P160 BX160MB4**	302
38	2515	1.9	38.4	50000	**A703_38.4 S5 ME5SA4**	**A703_38.4 S5 MX5SA4**	298	**A703_38.4 P160 BE160M4**	**A703_38.4 P160 BX160MB4**	299
41	2328	3.0	35.5	54500				**A803_35.5 P160 BE160M4**	**A803_35.5 P160 BX160MB4**	302
41	2321	1.9	35.4	50000	**A703_35.4 S5 ME5SA4**	**A703_35.4 S5 MX5SA4**	298	**A703_35.4 P160 BE160M4**	**A703_35.4 P160 BX160MB4**	299
43	2247	1.2	34.3	30000	**A603_34.3 S5 ME5SA4**	**A603_34.3 S5 MX5SA4**	294	**A603_34.3 P160 BE160M4**	**A603_34.3 P160 BX160MB4**	295
46	2074	1.3	31.7	30000	**A603_31.7 S5 ME5SA4**	**A603_31.7 S5 MX5SA4**	294	**A603_31.7 P160 BE160M4**	**A603_31.7 P160 BX160MB4**	295
48	2003	3.2	30.6	52600				**A803_30.6 P160 BE160M4**	**A803_30.6 P160 BX160MB4**	302
49	1972	2.3	30.1	49400				**A703_30.1 P160 BE160M4**	**A703_30.1 P160 BX160MB4**	299
49	1961	1.0	29.9	28200	**A553_29.9 S5 ME5SA4**	**A553_29.9 S5 MX5SA4**	290	**A553_29.9 P160 BE160M4**	**A553_29.9 P160 BX160MB4**	291
52	1849	3.6	28.2	51600			5	**A803_28.2 P160 BE160M4**	**A803_28.2 P160 BX160MB4**	302
53	1825	1.5	27.9	30000	**A603_27.9 S5 ME5SA4**	**A603_27.9 S5 MX5SA4**	294	**A603_27.9 P160 BE160M4**	**A603_27.9 P160 BX160MB4**	295
53	1820	2.3	27.8	48500				**A703_27.8 P160 BE160M4**	**A703_27.8 P160 BX160MB4**	299
57	1685	1.7	25.7	30000	**A603_25.7 S5 ME5SA4**	**A603_25.7 S5 MX5SA4**	294	**A603_25.7 P160 BE160M4**	**A603_25.7 P160 BX160MB4**	295
61	1576	1.0	24.0	7800	**A503_24.0 S5 ME5SA4**	**A503_24.0 S5 MX5SA4**	286	**A503_24.0 P160 BE160M4**	**A503_24.0 P160 BX160MB4**	287
62	1559	1.3	23.8	26000	**A553_23.8 S5 ME5SA4**	**A553_23.8 S5 MX5SA4**	290	**A553_23.8 P160 BE160M4**	**A553_23.8 P160 BX160MB4**	291
63	1541	2.8	23.5	46600				**A703_23.5 P160 BE160M4**	**A703_23.5 P160 BX160MB4**	299
69	1396	2.9	21.3	45500	**A703_21.3 S5 ME5SA4**	**A703_21.3 S5 MX5SA4**	298	**A703_21.3 P160 BE160M4**	**A703_21.3 P160 BX160MB4**	299
70	1416	0.8	20.9		**A502_20.9 S5 ME5SA4**	**A502_20.9 S5 MX5SA4**	286	**A502_20.9 P160 BE160M4**	**A502_20.9 P160 BX160MB4**	287
71	1394	1.4	20.6	30000	**A602_20.6 S5 ME5SA4**	**A602_20.6 S5 MX5SA4**	294	**A602_20.6 P160 BE160M4**	**A602_20.6 P160 BX160MB4**	295
75	1288	2.9	19.7	44500	**A703_19.7 S5 ME5SA4**	**A703_19.7 S5 MX5SA4**	298	**A703_19.7 P160 BE160M4**	**A703_19.7 P160 BX160MB4**	299
76	1302	1.4	19.2	27900	**A552_19.2 S5 ME5SA4**	**A552_19.2 S5 MX5SA4**	290	**A552_19.2 P160 BE160M4**	**A552_19.2 P160 BX160MB4**	291
88	1133	1.8	16.7	30000	**A602_16.7 S5 ME5SA4**	**A602_16.7 S5 MX5SA4**	294	**A602_16.7 P160 BE160M4**	**A602_16.7 P160 BX160MB4**	295
89	1121	1.1	16.6	12000	**A502_16.6 S5 ME5SA4**	**A502_16.6 S5 MX5SA4**	286	**A502_16.6 P160 BE160M4**	**A502_16.6 P160 BX160MB4**	287
94	1061	1.7	15.7	26600	**A552_15.7 S5 ME5SA4**	**A552_15.7 S5 MX5SA4**	290	**A552_15.7 P160 BE160M4**	**A552_15.7 P160 BX160MB4**	291
112	887	1.2	13.1	11500	**A502_13.1 S5 ME5SA4**	**A502_13.1 S5 MX5SA4**	286	**A502_13.1 P160 BE160M4**	**A502_13.1 P160 BX160MB4**	287
112	885	2.0	13.1	25400	**A552_13.1 S5 ME5SA4**	**A552_13.1 S5 MX5SA4**	290	**A552_13.1 P160 BE160M4**	**A552_13.1 P160 BX160MB4**	291
116	860	2.3	12.7	30000	**A602_12.7 S5 ME5SA4**	**A602_12.7 S5 MX5SA4**	294	**A602_12.7 P160 BE160M4**	**A602_12.7 P160 BX160MB4**	295
124	773	2.1	23.8	23600	**A553_23.8 S5 ME5SA2**		290	**A553_23.8 P160 BE160MA2**		291
142	701	2.6	10.4	24000	**A552_10.4 S5 ME5SA4**	**A552_10.4 S5 MX5SA4**	290	**A552_10.4 P160 BE160M4**	**A552_10.4 P160 BX160MB4**	291
143	698	2.9	10.3	30000	**A602_10.3 S5 ME5SA4**	**A602_10.3 S5 MX5SA4**	294	**A602_10.3 P160 BE160M4**	**A602_10.3 P160 BX160MB4**	295
151	659	1.5	9.7	10800	**A502_9.7 S5 ME5SA4**	**A502_9.7 S5 MX5SA4**	286	**A502_9.7 P160 BE160M4**	**A502_9.7 P160 BX160MB4**	287
174	573	3.1	8.5	22800	**A552_8.5 S5 ME5SA4**	**A552_8.5 S5 MX5SA4**	290	**A552_8.5 P160 BE160M4**	**A552_8.5 P160 BX160MB4**	291
190	524	1.8	7.7	10300	**A502_7.7 S5 ME5SA4**	**A502_7.7 S5 MX5SA4**	286	**A502_7.7 P160 BE160M4**	**A502_7.7 P160 BX160MB4**	287
224	440	2.0	13.1	9920	**A502_13.1 S5 ME5SA2**		286	**A502_13.1 P160 BE160MA2**		287
380	260	2.8	7.7	8650	**A502_7.7 S5 ME5SA2**		286	**A502_7.7 P160 BE160MA2**		287

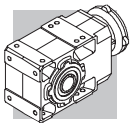

15 kW

n_2 min-1	M_2 Nm	S	i	R_{n2} N	IE2	IE3		IE2	IE3	
8.2	15697	0.9	180.0	75000	**A904_180.0 S5 ME5LA4**	**A904_180.0 S5 MX5LA4**	304	**A904_180.0 P160 BE160L4**	**A904_180.0 P160 BX160L4**	305
8.8	14490	1.0	166.1	75000	**A904_166.1 S5 ME5LA4**	**A904_166.1 S5 MX5LA4**	304	**A904_166.1 P160 BE160L4**	**A904_166.1 P160 BX160L4**	305
9.7	13467	1.0	151.0	75000	**A903_151.0 S5 ME5LA4**	**A903_151.0 S5 MX5LA4**	304	**A903_151.0 P160 BE160L4**	**A903_151.0 P160 BX160L4**	305
10.5	12431	1.0	139.4	75000	**A903_139.4 S5 ME5LA4**	**A903_139.4 S5 MX5LA4**	304	**A903_139.4 P160 BE160L4**	**A903_139.4 P160 BX160L4**	305
11.6	11294	1.2	126.6	75000	**A903_126.6 S5 ME5LA4**	**A903_126.6 S5 MX5LA4**	304	**A903_126.6 P160 BE160L4**	**A903_126.6 P160 BX160L4**	305
12.6	10426	1.3	116.9	75000	**A903_116.9 S5 ME5LA4**	**A903_116.9 S5 MX5LA4**	304	**A903_116.9 P160 BE160L4**	**A903_116.9 P160 BX160L4**	305
13.8	9526	1.5	106.8	75000	**A903_106.8 S5 ME5LA4**	**A903_106.8 S5 MX5LA4**	304	**A903_106.8 P160 BE160L4**	**A903_106.8 P160 BX160L4**	305
14.9	8793	1.6	98.6	75000	**A903_98.6 S5 ME5LA4**	**A903_98.6 S5 MX5LA4**	304	**A903_98.6 P160 BE160L4**	**A903_98.6 P160 BX160L4**	305
15.3	8564	0.9	96.0	60600	**A803_96.0 S5 ME5LA4**	**A803_96.0 S5 MX5LA4**	301	**A803_96.0 P160 BE160L4**	**A803_96.0 P160 BX160L4**	302
16.5	7953	1.0	89.2	60400	**A803_89.2 S5 ME5LA4**	**A803_89.2 S5 MX5LA4**	301	**A803_89.2 P160 BE160L4**	**A803_89.2 P160 BX160L4**	302
16.9	7765	1.8	87.1	75000	**A903_87.1 S5 ME5LA4**	**A903_87.1 S5 MX5LA4**	304	**A903_87.1 P160 BE160L4**	**A903_87.1 P160 BX160L4**	305
17.9	7341	1.1	82.3	59800	**A803_82.3 S5 ME5LA4**	**A803_82.3 S5 MX5LA4**	301	**A803_82.3 P160 BE160L4**	**A803_82.3 P160 BX160L4**	302
18.3	7168	2.0	80.4	75000	**A903_80.4 S5 ME5LA4**	**A903_80.4 S5 MX5LA4**	304	**A903_80.4 P160 BE160L4**	**A903_80.4 P160 BX160L4**	305
19.7	6642	2.1	74.5	75000	**A903_74.5 S5 ME5LA4**	**A903_74.5 S5 MX5LA4**	304	**A903_74.5 P160 BE160L4**	**A903_74.5 P160 BX160L4**	305
20.3	6454	1.2	72.4	59100	**A803_72.4 S5 ME5LA4**	**A803_72.4 S5 MX5LA4**	301	**A803_72.4 P160 BE160L4**	**A803_72.4 P160 BX160L4**	302
21.4	6131	2.3	68.8	75000	**A903_68.8 S5 ME5LA4**	**A903_68.8 S5 MX5LA4**	304	**A903_68.8 P160 BE160L4**	**A903_68.8 P160 BX160L4**	305
22.0	5957	1.3	66.8	58300	**A803_66.8 S5 ME5LA4**	**A803_66.8 S5 MX5LA4**	301	**A803_66.8 P160 BE160L4**	**A803_66.8 P160 BX160L4**	302
24.6	5331	1.5	59.8	57500	**A803_59.8 S5 ME5LA4**	**A803_59.8 S5 MX5LA4**	301	**A803_59.8 P160 BE160L4**	**A803_59.8 P160 BX160L4**	302
24.7	5317	2.6	59.6	75000	**A903_59.6 S5 ME5LA4**	**A903_59.6 S5 MX5LA4**	304	**A903_59.6 P160 BE160L4**	**A903_59.6 P160 BX160L4**	305
25.5	5143	1.0	57.7	50000	**A703_57.7 S5 ME5LA4**	**A703_57.7 S5 MX5LA4**	298	**A703_57.7 P160 BE160L4**	**A703_57.7 P160 BX160L4**	299
26.6	4921	1.6	55.2	56700	**A803_55.2 S5 ME5LA4**	**A803_55.2 S5 MX5LA4**	301	**A803_55.2 P160 BE160L4**	**A803_55.2 P160 BX160L4**	302
26.7	4908	2.9	55.0	75000	**A903_55.0 S5 ME5LA4**	**A903_55.0 S5 MX5LA4**	304	**A903_55.0 P160 BE160L4**	**A903_55.0 P160 BX160L4**	305
27.6	4747	1.1	53.2	50000	**A703_53.2 S5 ME5LA4**	**A703_53.2 S5 MX5LA4**	298	**A703_53.2 P160 BE160L4**	**A703_53.2 P160 BX160L4**	299
30	4370	1.1	49.0	50000	**A703_49.0 S5 ME5LA4**	**A703_49.0 S5 MX5LA4**	298	**A703_49.0 P160 BE160L4**	**A703_49.0 P160 BX160L4**	299
30	4307	3.3	48.3	74900				**A903_48.3 P160 BE160L4**	**A903_48.3 P160 BX160L4**	305
31	4297	1.9	48.2	55500	**A803_48.2 S5 ME5LA4**	**A803_48.2 S5 MX5LA4**	301	**A803_48.2 P160 BE160L4**	**A803_48.2 P160 BX160L4**	302
33	4034	1.2	45.2	50000	**A703_45.2 S5 ME5LA4**	**A703_45.2 S5 MX5LA4**	298	**A703_45.2 P160 BE160L4**	**A703_45.2 P160 BX160L4**	299
33	3976	3.5	44.6	73500				**A903_44.6 P160 BE160L4**	**A903_44.6 P160 BX160L4**	305
33	3966	1.9	44.5	54700	**A803_44.5 S5 ME5LA4**	**A803_44.5 S5 MX5LA4**	301	**A803_44.5 P160 BE160L4**	**A803_44.5 P160 BX160L4**	302
38	3433	2.2	38.5	53200				**A803_38.5 P160 BE160L4**	**A803_38.5 P160 BX160L4**	302
38	3423	1.4	38.4	49900	**A703_38.4 S5 ME5LA4**	**A703_38.4 S5 MX5LA4**	298	**A703_38.4 P160 BE160L4**	**A703_38.4 P160 BX160L4**	299
41	3169	2.2	35.5	52300				**A803_35.5 P160 BE160L4**	**A803_35.5 P160 BX160L4**	302
41	3160	1.4	35.4	49100	**A703_35.4 S5 ME5LA4**	**A703_35.4 S5 MX5LA4**	298	**A703_35.4 P160 BE160L4**	**A703_35.4 P160 BX160L4**	299
43	3059	0.9	34.3	30000	**A603_34.3 S5 ME5LA4**	**A603_34.3 S5 MX5LA4**	294	**A603_34.3 P160 BE160L4**	**A603_34.3 P160 BX160L4**	295
46	2824	1.0	31.7	30000	**A603_31.7 S5 ME5LA4**	**A603_31.7 S5 MX5LA4**	294	**A603_31.7 P160 BE160L4**	**A603_31.7 P160 BX160L4**	295
48	2727	2.4	30.6	50800				**A803_30.6 P160 BE160L4**	**A803_30.6 P160 BX160L4**	302
49	2684	1.7	30.1	47600				**A703_30.1 P160 BE160L4**	**A703_30.1 P160 BX160L4**	299
52	2517	2.6	28.2	49900				**A803_28.2 P160 BE160L4**	**A803_28.2 P160 BX160L4**	302
53	2484	1.1	27.9	30000	**A603_27.9 S5 ME5LA4**	**A603_27.9 S5 MX5LA4**	294	**A603_27.9 P160 BE160L4**	**A603_27.9 P160 BX160L4**	295
53	2478	1.7	27.8	46700				**A703_27.8 P160 BE160L4**	**A703_27.8 P160 BX160L4**	299
57	2293	1.2	25.7	30000	**A603_25.7 S5 ME5LA4**	**A603_25.7 S5 MX5LA4**	294	**A603_25.7 P160 BE160L4**	**A603_25.7 P160 BX160L4**	295
62	2122	0.9	23.8	22600	**A553_23.8 S5 ME5LA4**	**A553_23.8 S5 MX5LA4**	290	**A553_23.8 P160 BE160L4**	**A553_23.8 P160 BX160L4**	291
63	2098	2.1	23.5	45100				**A703_23.5 P160 BE160L4**	**A703_23.5 P160 BX160L4**	299
69	1900	2.1	21.3	44100	**A703_21.3 S5 ME5LA4**	**A703_21.3 S5 MX5LA4**	298	**A703_21.3 P160 BE160L4**	**A703_21.3 P160 BX160L4**	299
70	1868	3.5	20.9	46600	**A803_20.9 S5 ME5LA4**	**A803_20.9 S5 MX5LA4**	301	**A803_20.9 P160 BE160L4**	**A803_20.9 P160 BX160L4**	302
71	1897	1.1	20.6	30000	**A602_20.6 S5 ME5LA4**	**A602_20.6 S5 MX5LA4**	294	**A602_20.6 P160 BE160L4**	**A602_20.6 P160 BX160L4**	295
75	1754	2.1	19.7	43300	**A703_19.7 S5 ME5LA4**	**A703_19.7 S5 MX5LA4**	298	**A703_19.7 P160 BE160L4**	**A703_19.7 P160 BX160L4**	299
76	1725	3.5	19.3	45700	**A803_19.3 S5 ME5LA4**	**A803_19.3 S5 MX5LA4**	301	**A803_19.3 P160 BE160L4**	**A803_19.3 P160 BX160L4**	302
76	1772	1.0	19.2	26800	**A552_19.2 S5 ME5LA4**	**A552_19.2 S5 MX5LA4**	290	**A552_19.2 P160 BE160L4**	**A552_19.2 P160 BX160L4**	291
88	1542	1.3	16.7	30000	**A602_16.7 S5 ME5LA4**	**A602_16.7 S5 MX5LA4**	294	**A602_16.7 P160 BE160L4**	**A602_16.7 P160 BX160L4**	295
88	1488	2.7	16.7	41600	**A703_16.7 S5 ME5LA4**	**A703_16.7 S5 MX5LA4**	298	**A703_16.7 P160 BE160L4**	**A703_16.7 P160 BX160L4**	299
94	1444	1.2	15.7	25700	**A552_15.7 S5 ME5LA4**	**A552_15.7 S5 MX5LA4**	290	**A552_15.7 P160 BE160L4**	**A552_15.7 P160 BX160L4**	291
95	1374	2.7	15.4	40800	**A703_15.4 S5 ME5LA4**	**A703_15.4 S5 MX5LA4**	298	**A703_15.4 P160 BE160L4**	**A703_15.4 P160 BX160L4**	299
112	1207	0.9	13.1	10500	**A502_13.1 S5 ME5LA4**	**A502_13.1 S5 MX5LA4**	286	**A502_13.1 P160 BE160L4**	**A502_13.1 P160 BX160L4**	287
112	1167	3.3	13.1	39200				**A703_13.1 P160 BE160L4**	**A703_13.1 P160 BX160L4**	299
112	1205	1.5	13.1	24700	**A552_13.1 S5 ME5LA4**	**A552_13.1 S5 MX5LA4**	290	**A552_13.1 P160 BE160L4**	**A552_13.1 P160 BX160L4**	291
116	1170	1.7	12.7	30000	**A602_12.7 S5 ME5LA4**	**A602_12.7 S5 MX5LA4**	294	**A602_12.7 P160 BE160L4**	**A602_12.7 P160 BX160L4**	295
122	1077	3.3	12.1	38400				**A703_12.1 P160 BE160L4**	**A703_12.1 P160 BX160L4**	299
142	954	1.9	10.4	23400	**A552_10.4 S5 ME5LA4**	**A552_10.4 S5 MX5LA4**	290	**A552_10.4 P160 BE160L4**	**A552_10.4 P160 BX160L4**	291
143	950	2.1	10.3	30000	**A602_10.3 S5 ME5LA4**	**A602_10.3 S5 MX5LA4**	294	**A602_10.3 P160 BE160L4**	**A602_10.3 P160 BX160L4**	295
151	897	1.1	9.7	10100	**A502_9.7 S5 ME5LA4**	**A502_9.7 S5 MX5LA4**	286	**A502_9.7 P160 BE160L4**	**A502_9.7 P160 BX160L4**	287
174	779	2.3	8.5	22200	**A552_8.5 S5 ME5LA4**	**A552_8.5 S5 MX5LA4**	290	**A552_8.5 P160 BE160L4**	**A552_8.5 P160 BX160L4**	291
187	724	2.8	7.9	28300	**A602_7.9 S5 ME5LA4**	**A602_7.9 S5 MX5LA4**	294	**A602_7.9 P160 BE160L4**	**A602_7.9 P160 BX160L4**	295

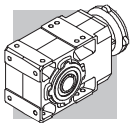

15 kW

n_2 min-1	M_2 Nm	S	i	R_{n2} N	IE2	IE3		IE2	IE3	
190	713	1.3	7.7	9750	**A502_7.7 S5 ME5LA4**	**A502_7.7 S5 MX5LA4**	286	**A502_7.7 P160 BE160L4**	**A502_7.7 P160 BX160L4**	287
229	591	2.9	6.4	20700	**A552_6.4 S5 ME5LA4**	**A552_6.4 S5 MX5LA4**	290	**A552_6.4 P160 BE160L4**	**A552_6.4 P160 BX160L4**	291
297	456	3.5	4.9	19400	**A552_4.9 S5 ME5LA4**	**A552_4.9 S5 MX5LA4**	290	**A552_4.9 P160 BE160L4**	**A552_4.9 P160 BX160L4**	291
302	446	1.8	9.7	8830	**A502_9.7 S5 ME5SB2**		286	**A502_9.7 P160 BE160MB2**		287
380	354	2.1	7.7	8350	**A502_7.7 S5 ME5SB2**		286	**A502_7.7 P160 BE160MB2**		287

18.5 kW

n_2 min-1	M_2 Nm	S	i	R_{n2} N	IE2	IE3		IE2	IE3	
11.6	13830	1.0	126.6	75000				**A903_126.6 P180 BE180M4**	**A903_126.6 P180 BX180M4**	305
12.6	12766	1.1	116.9	75000				**A903_116.9 P180 BE180M4**	**A903_116.9 P180 BX180M4**	305
13.8	11665	1.2	106.8	75000				**A903_106.8 P180 BE180M4**	**A903_106.8 P180 BX180M4**	305
14.9	10767	1.3	98.6	75000				**A903_98.6 P180 BE180M4**	**A903_98.6 P180 BX180M4**	305
16.9	9508	1.5	87.1	75000				**A903_87.1 P180 BE180M4**	**A903_87.1 P180 BX180M4**	305
18.3	8777	1.6	80.4	75000				**A903_80.4 P180 BE180M4**	**A903_80.4 P180 BX180M4**	305
19.7	8133	1.7	74.5	75000				**A903_74.5 P180 BE180M4**	**A903_74.5 P180 BX180M4**	305
20.3	7903	1.0	72.4	55600				**A803_72.4 P180 BE180M4**	**A803_72.4 P180 BX180M4**	302
21.4	7508	1.9	68.8	75000				**A903_68.8 P180 BE180M4**	**A903_68.8 P180 BX180M4**	305
22.0	7295	1.1	66.8	55100				**A803_66.8 P180 BE180M4**	**A803_66.8 P180 BX180M4**	302
24.6	6528	1.2	59.8	54700				**A803_59.8 P180 BE180M4**	**A803_59.8 P180 BX180M4**	302
24.7	6510	2.2	59.6	75000				**A903_59.6 P180 BE180M4**	**A903_59.6 P180 BX180M4**	305
26.6	6026	1.3	55.2	54100				**A803_55.2 P180 BE180M4**	**A803_55.2 P180 BX180M4**	302
26.7	6009	2.3	55.0	74900				**A903_55.0 P180 BE180M4**	**A903_55.0 P180 BX180M4**	305
30	5351	0.9	49.0	49600				**A703_49.0 P180 BE180M4**	**A703_49.0 P180 BX180M4**	299
30	5274	2.7	48.3	73100				**A903_48.3 P180 BE180M4**	**A903_48.3 P180 BX180M4**	305
31	5262	1.5	48.2	53200				**A803_48.2 P180 BE180M4**	**A803_48.2 P180 BX180M4**	302
33	4939	1.0	45.2	49000				**A703_45.2 P180 BE180M4**	**A703_45.2 P180 BX180M4**	299
33	4869	2.9	44.6	71800				**A903_44.6 P180 BE180M4**	**A903_44.6 P180 BX180M4**	305
33	4857	1.5	44.5	52500				**A803_44.5 P180 BE180M4**	**A803_44.5 P180 BX180M4**	302
38	4238	3.3	38.8	69700				**A903_38.8 P180 BE180M4**	**A903_38.8 P180 BX180M4**	305
38	4204	1.8	38.5	51400				**A803_38.5 P180 BE180M4**	**A803_38.5 P180 BX180M4**	302
38	4191	1.2	38.4	48000				**A703_38.4 P180 BE180M4**	**A703_38.4 P180 BX180M4**	299
41	3912	3.5	35.8	68500				**A903_35.8 P180 BE180M4**	**A903_35.8 P180 BX180M4**	305
41	3881	1.8	35.5	50600				**A803_35.5 P180 BE180M4**	**A803_35.5 P180 BX180M4**	302
41	3869	1.2	35.4	47300				**A703_35.4 P180 BE180M4**	**A703_35.4 P180 BX180M4**	299
48	3339	1.9	30.6	49300				**A803_30.6 P180 BE180M4**	**A803_30.6 P180 BX180M4**	302
49	3287	1.4	30.1	46100				**A703_30.1 P180 BE180M4**	**A703_30.1 P180 BX180M4**	299
52	3082	2.1	28.2	48500				**A803_28.2 P180 BE180M4**	**A803_28.2 P180 BX180M4**	302
53	3042	0.9	27.9	30000				**A603_27.9 P180 BE180M4**	**A603_27.9 P180 BX180M4**	295
53	3034	1.4	27.8	45300				**A703_27.8 P180 BE180M4**	**A703_27.8 P180 BX180M4**	299
57	2808	1.0	25.7	30000				**A603_25.7 P180 BE180M4**	**A603_25.7 P180 BX180M4**	295
60	2675	2.5	24.5	47200				**A803_24.5 P180 BE180M4**	**A803_24.5 P180 BX180M4**	302
63	2568	1.7	23.5	43900				**A703_23.5 P180 BE180M4**	**A703_23.5 P180 BX180M4**	299
65	2470	2.5	22.6	46300				**A803_22.6 P180 BE180M4**	**A803_22.6 P180 BX180M4**	302
69	2326	1.7	21.3	43000				**A703_21.3 P180 BE180M4**	**A703_21.3 P180 BX180M4**	299
70	2288	2.9	20.9	45600				**A803_20.9 P180 BE180M4**	**A803_20.9 P180 BX180M4**	302
71	2323	0.9	20.6	30000				**A602_20.6 P180 BE180M4**	**A602_20.6 P180 BX180M4**	295
75	2147	1.7	19.7	42300				**A703_19.7 P180 BE180M4**	**A703_19.7 P180 BX180M4**	299
76	2112	2.9	19.3	44800				**A803_19.3 P180 BE180M4**	**A803_19.3 P180 BX180M4**	302
88	1888	1.1	16.7	30000				**A602_16.7 P180 BE180M4**	**A602_16.7 P180 BX180M4**	295
88	1822	2.2	16.7	40800				**A703_16.7 P180 BE180M4**	**A703_16.7 P180 BX180M4**	299
94	1769	1.0	15.7	25000				**A552_15.7 P180 BE180M4**	**A552_15.7 P180 BX180M4**	291
95	1682	2.2	15.4	40100				**A703_15.4 P180 BE180M4**	**A703_15.4 P180 BX180M4**	299

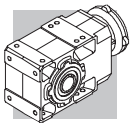

18.5 kW

n_2 min-1	M_2 Nm	S	i	R_{n2} N	IE2	IE3		IEC IE2	IEC IE3	
112	1429	2.7	13.1	38600				**A703_13.1 P180 BE180M4**	**A703_13.1 P180 BX180M4**	299
112	1475	1.2	13.1	24100				**A552_13.1 P180 BE180M4**	**A552_13.1 P180 BX180M4**	291
116	1433	1.4	12.7	30000				**A602_12.7 P180 BE180M4**	**A602_12.7 P180 BX180M4**	295
122	1319	2.7	12.1	37800				**A703_12.1 P180 BE180M4**	**A703_12.1 P180 BX180M4**	299
124	1299	1.2	23.8	21600	**A553_23.8 S5 ME5LA2**		290	**A553_23.8 P160 BE160L2**		291
142	1168	1.5	10.4	22900				**A552_10.4 P180 BE180M4**	**A552_10.4 P180 BX180M4**	291
143	1164	1.7	10.3	29900				**A602_10.3 P180 BE180M4**	**A602_10.3 P180 BX180M4**	295
144	1117	2.9	10.2	36300				**A703_10.2 P180 BE180M4**	**A703_10.2 P180 BX180M4**	299
151	1098	0.9	9.7	9530				**A502_9.7 P180 BE180M4**	**A502_9.7 P180 BX180M4**	287
156	1031	2.9	9.4	35600				**A703_9.4 P180 BE180M4**	**A703_9.4 P180 BX180M4**	299
174	954	1.9	8.5	21900				**A552_8.5 P180 BE180M4**	**A552_8.5 P180 BX180M4**	291
187	887	2.3	7.9	27900				**A602_7.9 P180 BE180M4**	**A602_7.9 P180 BX180M4**	295
190	873	1.1	7.7	9260				**A502_7.7 P180 BE180M4**	**A502_7.7 P180 BX180M4**	287
229	723	2.4	6.4	20400				**A552_6.4 P180 BE180M4**	**A552_6.4 P180 BX180M4**	291
297	558	2.9	4.9	19100				**A552_4.9 P180 BE180M4**	**A552_4.9 P180 BX180M4**	291
381	436	1.7	7.7	8100	**A502_7.7 S5 ME5LA2**		286	**A502_7.7 P160 BE160L2**		287

22 kW

n_2 min-1	M_2 Nm	S	i	R_{n2} N	IE2	IE3		IEC IE2	IEC IE3	
12.6	15213	0.9	116.9	75000				**A903_116.9 P180 BE180L4**	**A903_116.9 P180 BX180L4**	305
13.8	13900	1.0	106.8	75000				**A903_106.8 P180 BE180L4**	**A903_106.8 P180 BX180L4**	305
14.9	12831	1.1	98.6	75000				**A903_98.6 P180 BE180L4**	**A903_98.6 P180 BX180L4**	305
16.9	11330	1.2	87.1	75000				**A903_87.1 P180 BE180L4**	**A903_87.1 P180 BX180L4**	305
18.3	10459	1.3	80.4	75000				**A903_80.4 P180 BE180L4**	**A903_80.4 P180 BX180L4**	305
19.7	9692	1.4	74.5	75000				**A903_74.5 P180 BE180L4**	**A903_74.5 P180 BX180L4**	305
21.4	8947	1.6	68.8	75000				**A903_68.8 P180 BE180L4**	**A903_68.8 P180 BX180L4**	305
22.0	8693	0.9	66.8	51900				**A803_66.8 P180 BE180L4**	**A803_66.8 P180 BX180L4**	302
24.6	7779	1.0	59.8	51800				**A803_59.8 P180 BE180L4**	**A803_59.8 P180 BX180L4**	302
24.7	7758	1.8	59.6	73800				**A903_59.6 P180 BE180L4**	**A903_59.6 P180 BX180L4**	305
26.6	7181	1.1	55.2	51400				**A803_55.2 P180 BE180L4**	**A803_55.2 P180 BX180L4**	302
26.7	7161	2.0	55.0	72700				**A903_55.0 P180 BE180L4**	**A903_55.0 P180 BX180L4**	305
30	6285	2.2	48.3	71100				**A903_48.3 P180 BE180L4**	**A903_48.3 P180 BX180L4**	305
31	6270	1.3	48.2	50900				**A803_48.2 P180 BE180L4**	**A803_48.2 P180 BX180L4**	302
33	5802	2.4	44.6	70000				**A903_44.6 P180 BE180L4**	**A903_44.6 P180 BX180L4**	305
33	5788	1.3	44.5	50300				**A803_44.5 P180 BE180L4**	**A803_44.5 P180 BX180L4**	302
38	5050	2.8	38.8	68100				**A903_38.8 P180 BE180L4**	**A903_38.8 P180 BX180L4**	305
38	5010	1.5	38.5	49500				**A803_38.5 P180 BE180L4**	**A803_38.5 P180 BX180L4**	302
38	4995	1.0	38.4	46000				**A703_38.4 P180 BE180L4**	**A703_38.4 P180 BX180L4**	299
41	4662	2.9	35.8	67000				**A903_35.8 P180 BE180L4**	**A903_35.8 P180 BX180L4**	305
41	4625	1.5	35.5	48900				**A803_35.5 P180 BE180L4**	**A803_35.5 P180 BX180L4**	302
41	4611	1.0	35.4	45500				**A703_35.4 P180 BE180L4**	**A703_35.4 P180 BX180L4**	299
47	4099	3.4	31.5	65200				**A903_31.5 P180 BE180L4**	**A903_31.5 P180 BX180L4**	305
48	3979	1.6	30.6	47800				**A803_30.6 P180 BE180L4**	**A803_30.6 P180 BX180L4**	302
49	3917	1.2	30.1	44500				**A703_30.1 P180 BE180L4**	**A703_30.1 P180 BX180L4**	299
51	3784	3.4	29.1	64000				**A903_29.1 P180 BE180L4**	**A903_29.1 P180 BX180L4**	305
52	3673	1.8	28.2	47100				**A803_28.2 P180 BE180L4**	**A803_28.2 P180 BX180L4**	302
53	3616	1.2	27.8	43900				**A703_27.8 P180 BE180L4**	**A703_27.8 P180 BX180L4**	299
60	3188	2.1	24.5	45900				**A803_24.5 P180 BE180L4**	**A803_24.5 P180 BX180L4**	302
63	3061	1.4	23.5	42700				**A703_23.5 P180 BE180L4**	**A703_23.5 P180 BX180L4**	299
65	2943	2.1	22.6	45200				**A803_22.6 P180 BE180L4**	**A803_22.6 P180 BX180L4**	302

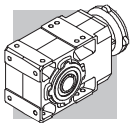

22 kW

n_2 min-1	M_2 Nm	S	i	R_{n2} N	IE2	IE3		IEC IE2	IEC IE3	
69	2772	1.4	21.3	41900				**A703_21.3 P180 BE180L4**	**A703_21.3 P180 BX180L4**	299
70	2726	2.4	20.9	44600				**A803_20.9 P180 BE180L4**	**A803_20.9 P180 BX180L4**	302
75	2559	1.4	19.7	41200				**A703_19.7 P180 BE180L4**	**A703_19.7 P180 BX180L4**	299
76	2516	2.4	19.3	43800				**A803_19.3 P180 BE180L4**	**A803_19.3 P180 BX180L4**	302
88	2178	3.0	16.7	42500				**A803_16.7 P180 BE180L4**	**A803_16.7 P180 BX180L4**	302
88	2250	0.9	16.7	30000				**A602_16.7 P180 BE180L4**	**A602_16.7 P180 BX180L4**	295
88	2172	1.8	16.7	39900				**A703_16.7 P180 BE180L4**	**A703_16.7 P180 BX180L4**	299
95	2011	3.0	15.5	41700				**A803_15.5 P180 BE180L4**	**A803_15.5 P180 BX180L4**	302
95	2005	1.8	15.4	39200				**A703_15.4 P180 BE180L4**	**A703_15.4 P180 BX180L4**	299
112	1703	2.3	13.1	37900				**A703_13.1 P180 BE180L4**	**A703_13.1 P180 BX180L4**	299
112	1758	1.0	13.1	23500				**A552_13.1 P180 BE180L4**	**A552_13.1 P180 BX180L4**	291
116	1708	1.2	12.7	30000				**A602_12.7 P180 BE180L4**	**A602_12.7 P180 BX180L4**	295
122	1572	2.3	12.1	37200				**A703_12.1 P180 BE180L4**	**A703_12.1 P180 BX180L4**	299
142	1392	1.3	10.4	22400				**A552_10.4 P180 BE180L4**	**A552_10.4 P180 BX180L4**	291
143	1387	1.4	10.3	29300				**A602_10.3 P180 BE180L4**	**A602_10.3 P180 BX180L4**	295
144	1331	2.4	10.2	35800				**A703_10.2 P180 BE180L4**	**A703_10.2 P180 BX180L4**	299
156	1228	2.4	9.4	35100				**A703_9.4 P180 BE180L4**	**A703_9.4 P180 BX180L4**	299
174	1137	1.6	8.5	21400				**A552_8.5 P180 BE180L4**	**A552_8.5 P180 BX180L4**	291
187	1057	1.9	7.9	27500				**A602_7.9 P180 BE180L4**	**A602_7.9 P180 BX180L4**	295
190	1040	0.9	7.7	8760				**A502_7.7 P180 BE180L4**	**A502_7.7 P180 BX180L4**	287
229	862	2.0	6.4	20100				**A552_6.4 P180 BE180L4**	**A552_6.4 P180 BX180L4**	291
297	665	2.4	4.9	18900				**A552_4.9 P180 BE180L4**	**A552_4.9 P180 BX180L4**	291

30 kW

n_2 min-1	M_2 Nm	S	i	R_{n2} N	IE...		IEC IE...	
16.8	15556	0.9	87.1	70100			**A903_87.1 P200 IEC200L4**	315
18.2	14360	1.0	80.4	70000			**A903_80.4 P200 IEC200L4**	315
19.6	13307	1.1	74.5	69700			**A903_74.5 P200 IEC200L4**	315
21.2	12283	1.1	68.8	69200			**A903_68.8 P200 IEC200L4**	315
24.5	10651	1.3	59.6	68500			**A903_59.6 P200 IEC200L4**	315
26.5	9832	1.4	55.0	67800			**A903_55.0 P200 IEC200L4**	315
30.0	8630	1.6	48.3	66900			**A903_48.3 P200 IEC200L4**	315
30	8609	0.9	48.2	45700			**A803_48.2 P200 IEC200L4**	312
33	7966	1.8	44.6	66000			**A903_44.6 P200 IEC200L4**	315
33	7946	0.9	44.5	45500			**A803_44.5 P200 IEC200L4**	312
38	6934	2.0	38.8	64700			**A903_38.8 P200 IEC200L4**	315
38	6879	1.1	38.5	45300			**A803_38.5 P200 IEC200L4**	312
41	6400	2.1	35.8	63800			**A903_35.8 P200 IEC200L4**	315
41	6349	1.1	35.5	45000			**A803_35.5 P200 IEC200L4**	312
46	5628	2.5	31.5	62400			**A903_31.5 P200 IEC200L4**	315
48	5463	1.2	30.6	44500			**A803_30.6 P200 IEC200L4**	312
50	5195	2.5	29.1	61400			**A903_29.1 P200 IEC200L4**	315
52	5043	1.3	28.2	44000			**A803_28.2 P200 IEC200L4**	312
60	4377	1.5	24.5	43300			**A803_24.5 P200 IEC200L4**	312
61	4307	3.1	24.1	59200			**A903_24.1 P200 IEC200L4**	315
62	4202	1.0	23.5	40100			**A703_23.5 P200 IEC200L4**	309
65	4041	1.5	22.6	42700			**A803_22.6 P200 IEC200L4**	312
66	3976	3.1	22.3	58200			**A903_22.3 P200 IEC200L4**	315
70	3752	3.3	21.0	57500			**A903_21.0 P200 IEC200L4**	315
70	3743	1.7	20.9	42300			**A803_20.9 P200 IEC200L4**	312

Die technischen Daten müssen als Anhaltswert betrachtet werden, die genaue Konfiguration muss mit den Daten der Motorenlieferanten für Motoren mit Leistungen größer als 22kW abgestimmt werden.

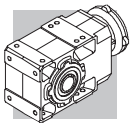

30 kW

n_2 min-1	M_2 Nm	S	i	R_{n2} N	IE...		IEC IE...	
75	3463	3.3	19.4	56500			**A903_19.4 P200 IEC200L4**	315
75	3455	1.8	19.3	41700			**A803_19.3 P200 IEC200L4**	312
87	2991	2.2	16.7	40700			**A803_16.7 P200 IEC200L4**	312
87	2982	1.3	16.7	38100			**A703_16.7 P200 IEC200L4**	309
94	2761	2.2	15.5	40000			**A803_15.5 P200 IEC200L4**	312
95	2752	1.3	15.4	37500			**A703_15.4 P200 IEC200L4**	309
110	2375	2.8	13.3	38900			**A803_13.3 P200 IEC200L4**	312
112	2338	1.6	13.1	36400			**A703_13.1 P200 IEC200L4**	309
119	2192	2.8	12.3	38200			**A803_12.3 P200 IEC200L4**	312
121	2158	1.6	12.1	35800			**A703_12.1 P200 IEC200L4**	309
125	2094	1.7	23.5	35600			**A703_23.5 P200 IEC200LA2**	309
137	1903	3.4	10.7	37100			**A803_10.7 P200 IEC200L4**	312
143	1827	1.8	10.2	34600			**A703_10.2 P200 IEC200L4**	309
148	1757	3.4	9.8	36500			**A803_9.8 P200 IEC200L4**	312
155	1687	1.8	9.4	34000			**A703_9.4 P200 IEC200L4**	309
176	1486	2.3	16.7	33100			**A703_16.7 P200 IEC200LA2**	309
190	1371	2.3	15.4	32500			**A703_15.4 P200 IEC200LA2**	309
224	1165	2.7	13.1	31300			**A703_13.1 P200 IEC200LA2**	309
243	1075	2.7	12.1	30600			**A703_12.1 P200 IEC200LA2**	309
287	910	3.2	10.2	29400			**A703_10.2 P200 IEC200LA2**	309
310	840	3.2	9.4	28800			**A703_9.4 P200 IEC200LA2**	309

37 kW

n_2 min-1	M_2 Nm	S	i	R_{n2} N	IE...		IEC IE...	
21.5	14945	0.9	68.8	63900			**A903_68.8 P225 IEC225S4**	315
24.8	12959	1.1	59.6	63900			**A903_59.6 P225 IEC225S4**	315
26.9	11962	1.2	55.0	63600			**A903_55.0 P225 IEC225S4**	315
31	10499	1.3	48.3	63100			**A903_48.3 P225 IEC225S4**	315
33	9692	1.4	44.6	62500			**A903_44.6 P225 IEC225S4**	315
38	8436	1.7	38.8	61700			**A903_38.8 P225 IEC225S4**	315
38	8369	0.9	38.5	41700			**A803_38.5 P225 IEC225S4**	312
41	7787	1.8	35.8	61000			**A903_35.8 P225 IEC225S4**	315
42	7725	0.9	35.5	41600			**A803_35.5 P225 IEC225S4**	312
47	6847	2.0	31.5	59900			**A903_31.5 P225 IEC225S4**	315
48	6647	1.0	30.6	41600			**A803_30.6 P225 IEC225S4**	312
51	6321	2.1	29.1	59100			**A903_29.1 P225 IEC225S4**	315
52	6135	1.1	28.2	41300			**A803_28.2 P225 IEC225S4**	312
60	5326	1.3	24.5	40900			**A803_24.5 P225 IEC225S4**	312
61	5241	2.5	24.1	57300			**A903_24.1 P225 IEC225S4**	315
65	4916	1.3	22.6	40500			**A803_22.6 P225 IEC225S4**	312
67	4837	2.5	22.3	56400			**A903_22.3 P225 IEC225S4**	315
70	4565	2.7	21.0	55900			**A903_21.0 P225 IEC225S4**	315
71	4554	1.4	20.9	40300			**A803_20.9 P225 IEC225S4**	312
76	4214	2.7	19.4	54900			**A903_19.4 P225 IEC225S4**	315
77	4204	1.4	19.3	39800			**A803_19.3 P225 IEC225S4**	312
88	3668	3.2	16.9	53400			**A903_16.9 P225 IEC225S4**	315
88	3639	1.8	16.7	39100			**A803_16.7 P225 IEC225S4**	312
95	3386	3.2	15.6	52500			**A903_15.6 P225 IEC225S4**	315
96	3359	1.8	15.5	38500			**A803_15.5 P225 IEC225S4**	312
111	2890	2.3	13.3	37600			**A803_13.3 P225 IEC225S4**	312
121	2667	2.3	12.3	37000			**A803_12.3 P225 IEC225S4**	312
139	2316	2.8	10.7	36100			**A803_10.7 P225 IEC225S4**	312
151	2137	2.8	9.8	35500			**A803_9.8 P225 IEC225S4**	312

Die technischen Daten müssen als Anhaltswert betrachtet werden, die genaue Konfiguration muss mit den Daten der Motorenlieferanten für Motoren mit Leistungen größer als 22kW abgestimmt werden.

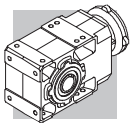

45 kW

n_2 min-1	M_2 Nm	S	i	R_{n2} N	IE...		IEC IE...	
26.9	14549	1.0	55.0	58700			**A903_55.0 P225 IEC225M4**	315
31	12769	1.1	48.3	58900			**A903_48.3 P225 IEC225M4**	315
33	11787	1.2	44.6	58600			**A903_44.6 P225 IEC225M4**	315
38	10260	1.4	38.8	58300			**A903_38.8 P225 IEC225M4**	315
41	9471	1.5	35.8	57800			**A903_35.8 P225 IEC225M4**	315
47	8328	1.7	31.5	57200			**A903_31.5 P225 IEC225M4**	315
51	7687	1.7	29.1	56600			**A903_29.1 P225 IEC225M4**	315
60	6477	1.0	24.5	38300			**A803_24.5 P225 IEC225M4**	312
61	6374	2.1	24.1	55200			**A903_24.1 P225 IEC225M4**	315
65	5979	1.0	22.6	38100			**A803_22.6 P225 IEC225M4**	312
67	5883	2.1	22.3	54500			**A903_22.3 P225 IEC225M4**	315
70	5552	2.2	21.0	54000			**A903_21.0 P225 IEC225M4**	315
71	5539	1.2	20.9	38000			**A803_20.9 P225 IEC225M4**	312
76	5125	2.3	19.4	53200			**A903_19.4 P225 IEC225M4**	315
77	5112	1.2	19.3	37700			**A803_19.3 P225 IEC225M4**	312
88	4461	2.7	16.9	52000			**A903_16.9 P225 IEC225M4**	315
88	4425	1.5	16.7	37300			**A803_16.7 P225 IEC225M4**	312
95	4118	2.7	15.6	51100			**A903_15.6 P225 IEC225M4**	315
96	4085	1.5	15.5	36900			**A803_15.5 P225 IEC225M4**	312
108	3621	3.1	13.7	49900			**A903_13.7 P225 IEC225M4**	315
111	3515	1.9	13.3	36200			**A803_13.3 P225 IEC225M4**	312
117	3342	3.1	12.6	49000			**A903_12.6 P225 IEC225M4**	315
121	3244	1.9	12.3	35700			**A803_12.3 P225 IEC225M4**	312
139	2816	2.3	10.7	34900			**A803_10.7 P225 IEC225M4**	312
141	2771	3.5	10.5	47100			**A903_10.5 P225 IEC225M4**	315
151	2600	2.3	9.8	34400			**A803_9.8 P225 IEC225M4**	312
153	2558	3.5	9.7	46200			**A903_9.7 P225 IEC225M4**	315

55 kW

n_2 min-1	M_2 Nm	S	i	R_{n2} N	IE...		IEC IE...	
33	14406	1.0	44.6	53900			**A903_44.6 P250 IEC250M4**	315
38	12540	1.1	38.8	54100			**A903_38.8 P250 IEC250M4**	315
41	11575	1.2	35.8	54000			**A903_35.8 P250 IEC250M4**	315
47	10179	1.4	31.5	53800			**A903_31.5 P250 IEC250M4**	315
51	9396	1.4	29.1	53400			**A903_29.1 P250 IEC250M4**	315
61	7790	1.7	24.1	52600			**A903_24.1 P250 IEC250M4**	315
67	7191	1.7	22.3	52000			**A903_22.3 P250 IEC250M4**	315
70	6786	1.8	21.0	51700			**A903_21.0 P250 IEC250M4**	315
76	6264	1.8	19.4	51100			**A903_19.4 P250 IEC250M4**	315
88	5452	2.2	16.9	50100			**A903_16.9 P250 IEC250M4**	315
95	5033	2.2	15.6	49400			**A903_15.6 P250 IEC250M4**	315
108	4425	2.5	13.7	48400			**A903_13.7 P250 IEC250M4**	315
117	4085	2.6	12.6	47600			**A903_12.6 P250 IEC250M4**	315
141	3387	2.9	10.5	45900			**A903_10.5 P250 IEC250M4**	315
153	3126	2.9	9.7	45100			**A903_9.7 P250 IEC250M4**	315

Die technischen Daten müssen als Anhaltswert betrachtet werden, die genaue Konfiguration muss mit den Daten der Motorenlieferanten für Motoren mit Leistungen größer als 22kW abgestimmt werden.

A 10 — 150 Nm

	i	n_1 = 2800 min^{-1}					n_1 = 1400 min^{-1}					
		n_2 min^{-1}	M_{n2} Nm	P_{n1} kW	R_{n1} N	R_{n2} N	n_2 min^{-1}	M_{n2} Nm	P_{n1} kW	R_{n1} N	R_{n2} N	
A 10 2_5.5	5.5	512	73	4.2	—	1830	256	73	2.1	960	2460	
A 10 2_6.3	6.3	442	80	3.9	—	1900	221	80	2.0	830	2560	
A 10 2_7.2	7.2	388	92	4.0	—	1910	194	93	2.0	630	2600	
A 10 2_8.5	8.5	329	92	3.4	—	2060	164	93	1.7	720	2790	
A 10 2_9.6	9.6	291	102	3.3	—	2090	146	128	2.1	—	2650	
A 10 2_10.6	10.6	265	125	3.7	540	2010	133	150	2.2	810	2590	
A 10 2_12.3	12.3	228	110	2.8	—	2280	114	138	1.7	—	2880	
A 10 2_13.9	13.9	201	135	3.0	620	2220	101	150	1.7	1080	2960	
A 10 2_16.4	16.4	170	140	2.7	610	2370	85	150	1.4	1140	3200	
A 10 2_18.6	18.6	151	147	2.5	650	2460	75	150	1.3	1180	3380	
A 10 2_21.4	21.4	131	150	2.2	650	2610	66	150	1.1	1200	3600	
A 10 2_23.8	23.8	118	150	2.0	750	2750	59	150	0.98	1220	3780	267
A 10 2_25.5	25.5	110	150	1.8	750	2840	55	150	0.92	1220	3900	
A 10 2_28.6	28.6	98	150	1.6	830	3000	49	150	0.82	1250	4100	
A 10 2_32.2	32.2	87	150	1.5	880	3170	43	150	0.73	1270	4310	
A 10 2_35.1	35.1	80	150	1.3	880	3300	40	150	0.67	1270	4470	
A 10 2_40.9	40.9	69	150	1.1	910	3530	34	150	0.57	1300	4770	
A 10 2_45.4	45.4	62	150	1.0	910	3700	31	150	0.52	1300	4980	
A 10 2_51.3	51.3	55	150	0.91	910	3910	27.3	150	0.46	1290	5240	
A 10 2_58.6	58.6	48	150	0.80	920	4140	23.9	150	0.40	1300	5500	
A 10 2_65.9	65.9	42	150	0.71	920	4360	21.2	150	0.35	1300	5500	
A 10 2_76.4	76.4	37	150	0.61	930	4640	18.3	150	0.31	1300	5500	
A 10 2_91.6	91.6	31	130	0.44	1020	5160	15.3	130	0.22	1300	5500	

(—) Nehmen Sie bitte Kontakt mit unserem Applikationsdienst und Querkraftsdaten angeben (Drehrichtung, Orientierung, Anordnung)

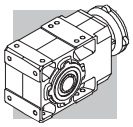

A 10 — 150 Nm

	i	n_1 = 900 min^{-1}					n_1 = 500 min^{-1}					
		n_2 min^{-1}	M_{n2} Nm	P_{n1} kW	R_{n1} N	R_{n2} N	n_2 min^{-1}	M_{n2} Nm	P_{n1} kW	R_{n1} N	R_{n2} N	
A 10 2_5.5	5.5	165	73	1.3	1300	2950	91	73	0.74	1300	3720	
A 10 2_6.3	6.3	142	80	1.3	1300	3070	79	80	0.70	1300	4100	
A 10 2_7.2	7.2	125	93	1.3	1160	3130	69	93	0.72	1300	3970	
A 10 2_8.5	8.5	106	95	1.1	1200	3330	59	110	0.72	1300	4100	
A 10 2_9.6	9.6	94	128	1.3	500	3230	52	128	0.74	1300	4160	
A 10 2_10.6	10.6	85	150	1.4	1300	3200	47	150	0.79	1300	4160	
A 10 2_12.3	12.3	73	150	1.2	180	3420	41	150	0.68	1030	4430	
A 10 2_13.9	13.9	65	150	1.1	1300	3630	36	150	0.60	1300	4680	
A 10 2_16.4	16.4	55	150	0.91	1300	3900	30	150	0.51	1300	5010	
A 10 2_18.6	18.6	48	150	0.81	1300	4120	26.9	150	0.45	1300	5270	
A 10 2_21.4	21.4	42	150	0.70	1300	4370	23.4	150	0.39	1300	5500	
A 10 2_23.8	23.8	38	150	0.63	1300	4570	21.0	150	0.35	1300	5500	267
A 10 2_25.5	25.5	35	150	0.59	1300	4710	19.6	150	0.33	1300	5500	
A 10 2_28.6	28.6	31	150	0.53	1300	4940	17.5	150	0.29	1300	5500	
A 10 2_32.2	32.2	28.0	150	0.47	1300	5190	15.5	150	0.26	1300	5500	
A 10 2_35.1	35.1	25.6	150	0.43	1300	5380	14.2	150	0.24	1300	5500	
A 10 2_40.9	40.9	22.0	150	0.37	1300	5500	12.2	150	0.20	1300	5500	
A 10 2_45.4	45.4	19.8	150	0.33	1300	5500	11.0	150	0.18	1300	5500	
A 10 2_51.3	51.3	17.6	150	0.29	1300	5500	9.8	150	0.16	1300	5500	
A 10 2_58.6	58.6	15.4	150	0.26	1300	5500	8.5	150	0.14	1300	5500	
A 10 2_65.9	65.9	13.7	150	0.23	1300	5500	7.6	150	0.13	1300	5500	
A 10 2_76.4	76.4	11.8	150	0.20	1300	5500	6.5	150	0.11	1300	5500	
A 10 2_91.6	91.6	9.8	130	0.14	1300	5500	5.5	130	0.08	1300	5500	

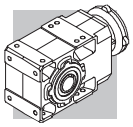

A 20 — 250 Nm

	i	n_1 = 2800 min^{-1}					n_1 = 1400 min^{-1}					
		n_2 min^{-1}	M_{n2} Nm	P_{n1} kW	R_{n1} N	R_{n2} N	n_2 min^{-1}	M_{n2} Nm	P_{n1} kW	R_{n1} N	R_{n2} N	
A 20 2_5.4	5.4	523	96	5.6	610	1910	262	121	3.5	770	2400	
A 20 2_6.5	6.5	428	107	5.1	490	2010	214	135	3.2	610	2530	
A 20 2_7.3	7.3	384	113	4.8	510	2070	192	143	3.1	630	2600	
A 20 2_8.4	8.4	334	116	4.3	510	2180	167	146	2.7	650	2750	
A 20 2_9.4	9.4	299	122	4.1	530	2260	149	154	2.6	660	2840	
A 20 2_10.3	10.3	271	183	5.5	650	1970	135	225	3.4	890	2520	
A 20 2_12.0	12.0	234	128	3.3	550	2280	117	161	2.1	690	3120	
A 20 2_14.1	14.1	199	199	4.4	750	2210	99	245	2.7	960	2820	
A 20 2_16.2	16.2	173	209	4.0	700	2310	87	250	2.4	1040	2990	
A 20 2_18.1	18.1	155	216	3.7	760	2400	77	250	2.2	1210	3170	
A 20 2_21.2	21.2	132	226	3.3	710	2540	66	250	1.8	1290	3430	
A 20 2_23.1	23.1	121	232	3.1	710	2620	61	250	1.7	1360	3580	
A 20 2_26.5	26.5	106	241	2.8	660	2750	53	250	1.5	1410	3820	
A 20 2_29.2	29.2	96	249	2.7	670	2850	48	250	1.3	1510	4000	
A 20 2_31.3	31.3	89	250	2.5	660	2940	45	250	1.2	1510	4130	
A 20 2_35.4	35.4	79	250	2.2	800	3140	40	250	1.1	1650	4380	
A 20 2_39.6	39.6	71	250	2.0	880	3320	35	250	0.98	1710	4600	
A 20 2_43.2	43.2	65	250	1.8	880	3460	32	250	0.90	1710	4790	
A 20 2_48.3	48.3	58	250	1.6	920	3650	29.0	250	0.81	1720	5030	271
A 20 2_53.7	53.7	52	250	1.5	920	3840	26.1	250	0.73	1720	5270	
A 20 2_63.1	63.1	44	245	1.2	1040	4180	22.2	245	0.61	1740	5680	
A 20 2_71.0	71.0	39	210	0.92	1360	4640	19.7	210	0.46	1790	6200	
A 20 2_79.9	79.9	35	210	0.82	1360	4880	17.5	210	0.41	1790	6200	
A 20 2_92.3	92.3	30	200	0.68	1380	5250	15.2	200	0.34	1810	6200	
A 20 3_109.2	109.2	25.6	165	0.49	1180	5900	12.8	205	0.30	1300	6200	
A 20 3_120.5	120.5	23.2	168	0.45	1130	6110	11.6	210	0.28	1300	6200	
A 20 3_129.1	129.1	21.7	175	0.44	1210	6200	10.8	215	0.27	1300	6200	
A 20 3_146.1	146.1	19.2	183	0.40	1160	6200	9.6	230	0.25	1300	6200	
A 20 3_163.4	163.4	17.1	190	0.37	1240	6200	8.6	235	0.23	1300	6200	
A 20 3_178.3	178.3	15.7	195	0.35	1200	6200	7.9	245	0.22	1300	6200	
A 20 3_199.2	199.2	14.1	200	0.32	1270	6200	7.0	250	0.20	1300	6200	
A 20 3_221.3	221.3	12.7	203	0.30	1240	6200	6.3	250	0.18	1300	6200	
A 20 3_260.5	260.5	10.8	214	0.26	1270	6200	5.4	250	0.15	1300	6200	
A 20 3_292.8	292.8	9.6	218	0.24	1300	6200	4.8	250	0.14	1300	6200	
A 20 3_329.4	329.4	8.5	221	0.22	1300	6200	4.3	250	0.12	1300	6200	
A 20 3_380.9	380.9	7.4	226	0.19	1300	6200	3.7	250	0.11	1300	6200	

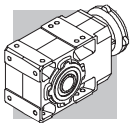

A 20 — 250 Nm

	i	n_1 = 900 min^{-1}					n_1 = 500 min^{-1}					
		n_2 min^{-1}	M_{n2} Nm	P_{n1} kW	R_{n1} N	R_{n2} N	n_2 min^{-1}	M_{n2} Nm	P_{n1} kW	R_{n1} N	R_{n2} N	
A 20 2_5.4	5.4	168	140	2.6	900	2780	93	170	1.8	1100	3390	
A 20 2_6.5	6.5	138	156	2.4	720	2930	76	190	1.6	860	3570	
A 20 2_7.3	7.3	123	165	2.3	740	3020	69	201	1.5	890	3670	
A 20 2_8.4	8.4	108	170	2.0	730	3180	60	206	1.4	910	3870	
A 20 2_9.4	9.4	96	179	1.9	760	3290	53	210	1.2	1090	4050	
A 20 2_10.3	10.3	87	250	2.4	1190	2990	48	250	1.3	2200	3980	
A 20 2_12.0	12.0	75	187	1.6	790	2990	42	210	0.98	1336	4510	
A 20 2_14.1	14.1	64	250	1.8	1610	3490	36	250	0.99	2200	4590	
A 20 2_16.2	16.2	56	250	1.6	1690	3730	31	250	0.86	2200	4880	
A 20 2_18.1	18.1	50	250	1.4	1860	3930	27.6	250	0.77	2200	5140	
A 20 2_21.2	21.2	42	250	1.2	1940	4230	23.6	250	0.66	2200	5500	
A 20 2_23.1	23.1	39	250	1.1	1970	4400	21.6	250	0.60	2200	5710	
A 20 2_26.5	26.5	34	250	0.95	1980	4680	18.9	250	0.53	2200	6050	
A 20 2_29.2	29.2	31	250	0.86	2000	4890	17.1	250	0.48	2200	6200	
A 20 2_31.3	31.3	28.7	250	0.80	2000	5040	16.0	250	0.44	2200	6200	
A 20 2_35.4	35.4	25.4	250	0.71	2020	5330	14.1	250	0.39	2200	6200	
A 20 2_39.6	39.6	22.7	250	0.63	2040	5590	12.6	250	0.35	2200	6200	
A 20 2_43.2	43.2	20.8	250	0.58	2040	5800	11.6	250	0.32	2200	6200	
A 20 2_48.3	48.3	18.6	250	0.52	2040	6080	10.4	250	0.29	2200	6200	271
A 20 2_53.7	53.7	16.8	250	0.47	2050	6200	9.3	250	0.26	2200	6200	
A 20 2_63.1	63.1	14.3	245	0.39	2060	6200	7.9	245	0.22	2200	6200	
A 20 2_71.0	71.0	12.7	210	0.30	2120	6200	7.0	210	0.16	2200	6200	
A 20 2_79.9	79.9	11.3	210	0.26	2120	6200	6.3	210	0.15	2200	6200	
A 20 2_92.3	92.3	9.7	200	0.22	2140	6200	5.4	200	0.12	2200	6200	
A 20 3_109.2	109.2	8.2	240	0.23	1300	6200	4.6	250	0.13	1300	6200	
A 20 3_120.5	120.5	7.5	245	0.21	1300	6200	4.1	250	0.12	1300	6200	
A 20 3_129.1	129.1	7.0	250	0.20	1300	6200	3.9	250	0.11	1300	6200	
A 20 3_146.1	146.1	6.2	250	0.18	1300	6200	3.4	250	0.10	1300	6200	
A 20 3_163.4	163.4	5.5	250	0.16	1300	6200	3.1	250	0.09	1300	6200	
A 20 3_178.3	178.3	5.0	250	0.15	1300	6200	2.8	250	0.08	1300	6200	
A 20 3_199.2	199.2	4.5	250	0.13	1300	6200	2.5	250	0.07	1300	6200	
A 20 3_221.3	221.3	4.1	250	0.12	1300	6200	2.3	250	0.06	1300	6200	
A 20 3_260.5	260.5	3.5	250	0.10	1300	6200	1.9	250	0.06	1300	6200	
A 20 3_292.8	292.8	3.1	250	0.09	1300	6200	1.7	250	0.05	1300	6200	
A 20 3_329.4	329.4	2.7	250	0.08	1300	6200	1.5	250	0.04	1300	6200	
A 20 3_380.9	380.9	2.4	250	0.07	1300	6200	1.3	250	0.04	1300	6200	

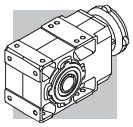

A 30 — 410 Nm

	i	n_1 = 2800 min^{-1}					n_1 = 1400 min^{-1}					
		n_2 min^{-1}	M_{n2} Nm	P_{n1} kW	R_{n1} N	R_{n2} N	n_2 min^{-1}	M_{n2} Nm	P_{n1} kW	R_{n1} N	R_{n2} N	
A 30 2_5.4	5.4	517	175	10.1	1130	2480	259	220	6.3	1430	3130	
A 30 2_6.4	6.4	437	185	9.0	1120	2630	218	230	5.6	1470	3330	
A 30 2_7.0	7.0	399	194	8.6	1140	2690	199	245	5.4	1430	3380	
A 30 2_8.5	8.5	331	200	7.4	1220	2900	165	250	4.6	1570	3660	
A 30 2_9.3	9.3	301	214	7.2	1140	2950	150	270	4.5	1440	3710	
A 30 2_10.5	10.5	268	278	8.3	1800	2770	134	340	5.1	2200	3550	
A 30 2_11.8	11.8	238	230	6.1	1130	3200	119	290	3.8	1420	4030	
A 30 2_13.6	13.6	206	301	6.9	1830	3030	103	370	4.3	2200	3870	
A 30 2_16.3	16.3	171	318	6.1	1830	3240	86	385	3.7	2200	4170	
A 30 2_18.0	18.0	156	327	5.7	1840	3350	78	400	3.5	2200	4290	
A 30 2_20.5	20.5	136	340	5.2	1830	3510	68	410	3.1	2200	4530	
A 30 2_22.8	22.8	123	351	4.8	1850	3640	62	410	2.8	2200	4770	
A 30 2_26.5	26.5	106	367	4.3	1840	3850	53	410	2.4	2200	5150	
A 30 2_29.3	29.3	96	378	4.0	1847	3980	48	410	2.2	2200	5400	
A 30 2_33.4	33.4	84	393	3.7	1840	4170	42	410	1.9	2200	5750	
A 30 2_36.6	36.6	76	404	3.4	1840	4310	38	410	1.7	2200	6010	
A 30 2_39.3	39.3	71	410	3.3	1810	4430	36	410	1.6	2200	6200	
A 30 2_43.4	43.4	64	410	2.9	1850	4660	32	410	1.5	2200	6490	
A 30 2_48.3	48.3	58	410	2.6	1860	4920	29.0	410	1.3	2200	6810	
A 30 2_52.7	52.7	53	410	2.4	1860	5130	26.6	410	1.2	2200	7080	275
A 30 2_59.4	59.4	47	400	2.1	1890	5500	23.6	400	1.0	2200	7530	
A 30 2_66.0	66.0	42	390	1.8	1900	5840	21.2	390	0.92	2200	7940	
A 30 2_76.5	76.5	37	350	1.4	1950	6480	18.3	350	0.71	2200	8690	
A 30 2_86.7	86.7	32	320	1.2	2000	7010	16.2	320	0.58	2200	9310	
A 30 2_97.5	97.5	28.7	300	0.96	2020	7480	14.4	300	0.48	2200	9600	
A 30 3_109.1	109.1	25.7	240	0.71	1300	8240	12.8	300	0.44	1300	9600	
A 30 3_120.5	120.5	23.2	243	0.65	1120	8540	11.6	300	0.40	1300	9600	
A 30 3_137.4	137.4	20.4	250	0.59	1300	8950	10.2	315	0.37	1300	9600	
A 30 3_150.7	150.7	18.6	261	0.56	1170	9210	9.3	330	0.35	1300	9600	
A 30 3_161.4	161.4	17.3	270	0.54	1300	9410	8.7	340	0.34	1300	9600	
A 30 3_178.5	178.5	15.7	274	0.49	1210	9600	7.8	345	0.31	1300	9600	
A 30 3_198.5	198.5	14.1	280	0.45	1300	9600	7.1	350	0.28	1300	9600	
A 30 3_216.6	216.6	12.9	287	0.43	1240	9600	6.5	360	0.27	1300	9600	
A 30 3_244.3	244.3	11.5	295	0.39	1300	9600	5.7	370	0.24	1300	9600	
A 30 3_271.5	271.5	10.3	301	0.36	1280	9600	5.2	380	0.23	1300	9600	
A 30 3_314.5	314.5	8.9	309	0.32	1300	9600	4.5	390	0.20	1300	9600	
A 30 3_356.3	356.3	7.9	320	0.29	1300	9600	3.9	370	0.17	1300	9600	
A 30 3_400.8	400.8	7.0	320	0.26	1300	9600	3.5	360	0.14	1300	9600	

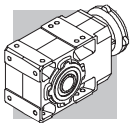

A 30 — 410 Nm

	i	n_1 = 900 min^{-1}					n_1 = 500 min^{-1}					
		n_2 min^{-1}	M_{n2} Nm	P_{n1} kW	R_{n1} N	R_{n2} N	n_2 min^{-1}	M_{n2} Nm	P_{n1} kW	R_{n1} N	R_{n2} N	
A 30 2_5.4	5.4	166	255	4.7	1660	3630	92	300	3.1	2200	4470	
A 30 2_6.4	6.4	140	270	4.2	1630	3830	78	300	2.6	2200	4830	
A 30 2_7.0	7.0	128	284	4.1	1650	3920	71	300	2.4	2200	5040	
A 30 2_8.5	8.5	106	290	3.4	1810	4240	59	300	2.0	2200	5470	
A 30 2_9.3	9.3	97	300	3.2	1900	4380	54	300	1.8	2200	5710	
A 30 2_10.5	10.5	86	391	3.7	2200	4130	48	410	2.2	2200	5400	
A 30 2_11.8	11.8	76	300	2.6	2200	4880	42	300	1.4	2200	6320	
A 30 2_13.6	13.6	66	410	3.0	2200	4600	37	410	1.7	2200	6110	
A 30 2_16.3	16.3	55	410	2.5	2200	5044	31	410	1.4	2200	6650	
A 30 2_18.0	18.0	50	410	2.3	2200	5280	27.8	410	1.3	2200	6940	
A 30 2_20.5	20.5	44	410	2.0	2200	5630	24.3	410	1.1	2200	7360	
A 30 2_22.8	22.8	40	410	1.8	2200	5910	22.0	410	1.0	2200	7700	
A 30 2_26.5	26.5	34	410	1.5	2200	6340	18.8	410	0.86	2200	8230	
A 30 2_29.3	29.3	31	410	1.4	2200	6640	17.1	410	0.78	2200	8590	
A 30 2_33.4	33.4	26.9	410	1.2	2200	7040	15.0	410	0.68	2200	9080	
A 30 2_36.6	36.6	24.6	410	1.1	2200	7340	13.6	410	0.62	2200	9440	
A 30 2_39.3	39.3	22.9	410	1.0	2200	7560	12.7	410	0.58	2200	9600	
A 30 2_43.4	43.4	20.7	410	0.95	2200	7900	11.5	410	0.53	2200	9600	
A 30 2_48.3	48.3	18.6	410	0.85	2200	8270	10.4	410	0.47	2200	9600	
A 30 2_52.7	52.7	17.1	410	0.78	2200	8590	9.5	410	0.43	2200	9600	275
A 30 2_59.4	59.4	15.1	400	0.67	2200	9090	8.4	400	0.37	2200	9600	
A 30 2_66.0	66.0	13.6	390	0.59	2200	9560	7.6	390	0.33	2200	9600	
A 30 2_76.5	76.5	11.8	350	0.46	2200	9600	6.5	350	0.25	2200	9600	
A 30 2_86.7	86.7	10.4	320	0.37	2200	9600	5.8	320	0.21	2200	9600	
A 30 2_97.5	97.5	9.2	300	0.31	2200	9600	5.1	300	0.17	2200	9600	
A 30 3_109.1	109.1	8.3	350	0.33	1300	9600	4.6	370	0.20	1300	9600	
A 30 3_120.5	120.5	7.5	354	0.30	1300	9600	4.2	410	0.20	1300	9600	
A 30 3_137.4	137.4	6.5	370	0.28	1300	9600	3.6	410	0.17	1300	9600	
A 30 3_150.7	150.7	6.0	381	0.26	1300	9600	3.3	410	0.16	1300	9600	
A 30 3_161.4	161.4	5.6	390	0.25	1300	9600	3.1	410	0.15	1300	9600	
A 30 3_178.5	178.5	5.0	400	0.23	1300	9600	2.8	410	0.13	1300	9600	
A 30 3_198.5	198.5	4.5	410	0.21	1300	9600	2.5	410	0.12	1300	9600	
A 30 3_216.6	216.6	4.2	410	0.20	1300	9600	2.3	410	0.11	1300	9600	
A 30 3_244.3	244.3	3.7	410	0.17	1300	9600	2.0	410	0.10	1300	9600	
A 30 3_271.5	271.5	3.3	410	0.16	1300	9600	1.8	410	0.09	1300	9600	
A 30 3_314.5	314.5	2.9	410	0.13	1300	9600	1.6	410	0.07	1300	9600	
A 30 3_356.3	356.3	2.5	380	0.11	1300	9600	1.4	380	0.06	1300	9600	
A 30 3_400.8	400.8	2.2	360	0.09	1300	9600	1.2	360	0.05	1300	9600	

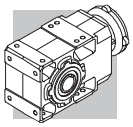

A 35 — 600 Nm

	i	n_1 = 2800 min^{-1}					n_1 = 1400 min^{-1}					
		n_2 min^{-1}	M_{n2} Nm	P_{n1} kW	R_{n1} N	R_{n2} N	n_2 min^{-1}	M_{n2} Nm	P_{n1} kW	R_{n1} N	R_{n2} N	
A 35 2_5.4	5.4	517	246	14.2	1420	4000	259	310	8.9	1790	5050	
A 35 2_6.4	6.4	437	262	12.7	1420	4230	218	330	8.0	1790	5330	
A 35 2_7.0	7.0	399	278	12.3	1410	4320	199	350	7.8	1790	5440	
A 35 2_8.5	8.5	331	286	10.5	1450	4650	165	360	6.6	1830	5850	
A 35 2_9.3	9.3	301	302	10.1	1450	4760	150	380	6.4	1830	6000	
A 35 2_10.6	10.6	263	310	9.1	1440	5010	132	390	5.7	1830	6310	
A 35 2_11.8	11.8	238	317	8.4	1480	5200	119	400	5.3	1860	6550	
A 35 2_13.1	13.1	214	400	10.9	1630	4470	107	550	6.6	2100	5780	
A 35 2_15.5	15.5	181	430	10.0	1620	4670	90	570	5.7	2120	6190	
A 35 2_17.0	17.0	165	465	9.7	1620	4730	83	600	5.5	2130	6310	
A 35 2_20.4	20.4	137	500	8.4	1630	5080	69	600	4.6	2170	6930	
A 35 2_22.5	22.5	125	540	7.8	1660	5290	62	600	4.2	2200	7260	
A 35 2_25.7	25.7	109	585	7.1	1640	5540	55	600	3.6	2200	7740	
A 35 2_28.4	28.4	98	600	6.6	1660	5760	49	600	3.3	2200	8130	
A 35 2_33.2	33.2	84	600	5.6	910	6240	42	600	2.8	2200	8730	
A 35 2_36.6	36.6	76	600	5.1	1080	6560	38	600	2.6	2200	9140	
A 35 2_41.8	41.8	67	600	4.5	1140	7010	34	600	2.2	2200	9700	
A 35 2_45.8	45.8	61	600	4.1	1260	7330	31	600	2.0	2200	10100	
A 35 2_49.1	49.1	57	600	3.8	1260	7580	28.5	600	1.9	2200	10400	
A 35 2_54.3	54.3	52	600	3.4	1360	7950	25.8	600	1.7	2200	10900	279
A 35 2_60.4	60.4	46	600	3.1	1470	8360	23.2	600	1.6	2200	11400	
A 35 2_65.8	65.8	43	600	2.8	1470	8700	21.3	600	1.4	2200	11800	
A 35 2_74.3	74.3	38	600	2.5	1560	9200	18.8	600	1.3	2200	12000	
A 35 2_82.5	82.5	34	600	2.3	1560	9650	17.0	600	1.1	2200	12000	
A 35 2_95.6	95.6	29.3	540	1.8	1860	10600	14.6	540	0.88	2200	12000	
A 35 3_105.5	105.5	26.5	430	1.3	550	12000	13.3	525	0.80	780	12000	
A 35 3_116.9	116.9	24.0	455	1.3	650	12000	12.0	560	0.77	870	12000	
A 35 3_136.3	136.3	20.5	470	1.1	870	12000	10.3	575	0.68	1110	12000	
A 35 3_150.6	150.6	18.6	495	1.1	900	12000	9.3	600	0.64	1160	12000	
A 35 3_171.8	171.8	16.3	505	0.95	960	12000	8.1	600	0.56	1250	12000	
A 35 3_188.3	188.3	14.9	525	0.90	990	12000	7.4	600	0.51	1300	12000	
A 35 3_201.8	201.8	13.9	525	0.84	1020	12000	6.9	600	0.48	1300	12000	
A 35 3_223.2	223.2	12.5	545	0.79	1050	12000	6.3	600	0.43	1300	12000	
A 35 3_248.1	248.1	11.3	565	0.73	1080	12000	5.6	600	0.39	1300	12000	
A 35 3_270.7	270.7	10.3	570	0.68	1110	12000	5.2	600	0.36	1300	12000	
A 35 3_305.4	305.4	9.2	585	0.62	1140	12000	4.6	600	0.32	1300	12000	
A 35 3_339.3	339.3	8.3	520	0.49	1210	12000	4.1	520	0.25	1300	12000	
A 35 3_393.2	393.2	7.1	465	0.38	1260	12000	3.6	465	0.19	1300	12000	

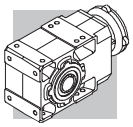

A 35 — 600 Nm

	i	n_1 = 900 min^{-1}					n_1 = 500 min^{-1}					
		n_2 min^{-1}	M_{n2} Nm	P_{n1} kW	R_{n1} N	R_{n2} N	n_2 min^{-1}	M_{n2} Nm	P_{n1} kW	R_{n1} N	R_{n2} N	
A 35 2_5.4	5.4	166	340	6.3	2150	5940	92	340	3.5	2200	7600	
A 35 2_6.4	6.4	140	350	5.5	2190	6340	78	350	3.0	2200	8090	
A 35 2_7.0	7.0	128	370	5.3	2200	6490	71	370	2.9	2200	8290	
A 35 2_8.5	8.5	106	380	4.5	2200	6970	59	380	2.5	2200	8890	
A 35 2_9.3	9.3	97	400	4.3	2200	7160	54	400	2.4	2200	9140	
A 35 2_10.6	10.6	85	400	3.8	2200	7570	47	400	2.1	2200	9650	
A 35 2_11.8	11.8	76	400	3.4	2200	7910	42	400	1.9	2200	10100	
A 35 2_13.1	13.1	69	600	4.6	2200	6910	38	600	2.6	2200	9140	
A 35 2_15.5	15.5	58	600	3.9	2090	7510	32	600	2.2	2200	9860	
A 35 2_17.0	17.0	53	600	3.5	2200	7840	29.5	600	2.0	2200	10300	
A 35 2_20.4	20.4	44	600	2.9	2200	8560	24.5	600	1.6	2200	11100	
A 35 2_22.5	22.5	40	600	2.7	2200	8950	22.2	600	1.5	2200	11600	
A 35 2_25.7	25.7	35	600	2.3	2200	9500	19.5	600	1.3	2200	12000	
A 35 2_28.4	28.4	32	600	2.1	2200	9950	17.6	600	1.2	2200	12000	
A 35 2_33.2	33.2	27.1	600	1.8	2200	10700	15.1	600	1.0	2200	12000	
A 35 2_36.6	36.6	24.6	600	1.6	2200	11100	13.7	600	0.91	2200	12000	
A 35 2_41.8	41.8	21.5	600	1.4	2200	11800	12.0	600	0.80	2200	12000	
A 35 2_45.8	45.8	19.6	600	1.3	2200	12000	10.9	600	0.73	2200	12000	
A 35 2_49.1	49.1	18.3	600	1.2	2200	12000	10.2	600	0.68	2200	12000	
A 35 2_54.3	54.3	16.6	600	1.1	2200	12000	9.2	600	0.62	2200	12000	279
A 35 2_60.4	60.4	14.9	600	1.0	2200	12000	8.3	600	0.55	2200	12000	
A 35 2_65.8	65.8	13.7	600	0.91	2200	12000	7.6	600	0.51	2200	12000	
A 35 2_74.3	74.3	12.1	600	0.81	2200	12000	6.7	600	0.45	2200	12000	
A 35 2_82.5	82.5	10.9	600	0.73	2200	12000	6.1	600	0.40	2200	12000	
A 35 2_95.6	95.6	9.4	540	0.57	2200	12000	5.2	540	0.31	2200	12000	
A 35 3_105.5	105.5	8.5	600	0.59	940	12000	4.7	600	0.33	1300	12000	
A 35 3_116.9	116.9	7.7	600	0.53	1230	12000	4.3	600	0.30	1300	12000	
A 35 3_136.3	136.3	6.6	600	0.46	1300	12000	3.7	600	0.25	1300	12000	
A 35 3_150.6	150.6	6.0	600	0.41	1300	12000	3.3	600	0.23	1300	12000	
A 35 3_171.8	171.8	5.2	600	0.36	1300	12000	2.9	600	0.20	1300	12000	
A 35 3_188.3	188.3	4.8	600	0.33	1300	12000	2.7	600	0.18	1300	12000	
A 35 3_201.8	201.8	4.5	600	0.31	1300	12000	2.5	600	0.17	1300	12000	
A 35 3_223.2	223.2	4.0	600	0.28	1300	12000	2.2	600	0.15	1300	12000	
A 35 3_248.1	248.1	3.6	600	0.25	1300	12000	2.0	600	0.14	1300	12000	
A 35 3_270.7	270.7	3.3	600	0.23	1300	12000	1.8	600	0.13	1300	12000	
A 35 3_305.4	305.4	2.9	600	0.20	1300	12000	1.6	600	0.11	1300	12000	
A 35 3_339.3	339.3	2.7	520	0.16	1300	12000	1.5	520	0.09	1300	12000	
A 35 3_393.2	393.2	2.3	465	0.12	1300	12000	1.3	465	0.07	1300	12000	

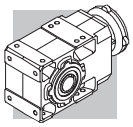

A 41 — 850 Nm

	i	n_1 = 2800 min^{-1}					n_1 = 1400 min^{-1}					
		n_2 min^{-1}	M_{n2} Nm	P_{n1} kW	R_{n1} N	R_{n2} N	n_2 min^{-1}	M_{n2} Nm	P_{n1} kW	R_{n1} N	R_{n2} N	
A 41 2_5.2	5.2	534	450	27	1790	4350	267	550	16.4	2450	5560	
A 41 2_7.1	7.1	393	490	22	1890	4850	197	550	12.0	2670	6430	
A 41 2_8.3	8.3	336	510	19.1	1900	5140	168	550	10.3	2750	6920	
A 41 2_9.2	9.2	304	530	18.0	1980	5300	152	550	9.3	2860	7240	
A 41 2_10.1	10.1	276	435	13.4	2680	6030	138	535	8.2	3390	7650	
A 41 2_11.7	11.7	238	550	14.6	2050	5870	119	550	7.3	2950	8070	
A 41 2_13.8	13.8	204	480	10.9	2690	6680	102	585	6.6	3430	8510	
A 41 2_16.1	16.1	174	500	9.7	2700	7070	87	610	5.9	3430	9000	
A 41 2_17.8	17.8	158	515	9.0	2730	7310	79	630	5.5	3470	9300	
A 41 2_22.7	22.7	123	550	7.6	2730	7970	62	680	4.7	3460	10100	
A 41 2_28.3	28.3	99	595	6.6	2670	8570	49	730	4.0	3450	10900	
A 41 2_35.9	35.9	78	635	5.5	2590	9320	39	780	3.4	3410	11800	
A 41 2_45.1	45.1	62	680	4.7	2500	10100	31	830	2.9	3330	12800	
A 41 2_48.3	48.3	58	690	4.5	2430	10300	29.0	850	2.7	3200	13100	
A 41 2_53.1	53.1	53	700	4.1	2470	10700	26.3	850	2.5	3330	13700	
A 41 2_58.8	58.8	48	730	3.9	2390	11100	23.8	850	2.3	3460	14300	283
A 41 2_64.2	64.2	44	740	3.6	2320	11500	21.8	850	2.1	3460	14800	
A 41 2_71.3	71.3	39	780	3.4	2120	11800	19.6	850	1.9	3470	15000	
A 41 2_79.2	79.2	35	800	3.1	1990	12300	17.7	800	1.6	3500	15000	
A 41 3_92.8	92.8	30	650	2.3	270	14000	15.1	800	1.4	430	15000	
A 41 3_115.9	115.9	24.2	800	2.2	310	14600	12.1	850	1.2	980	15000	
A 41 3_146.9	146.9	19.1	850	1.9	790	15000	9.5	850	0.93	1640	15000	
A 41 3_184.4	184.4	15.2	850	1.5	1290	15000	7.6	850	0.74	1770	15000	
A 41 3_197.5	197.5	14.2	850	1.4	1360	15000	7.1	850	0.69	1790	15000	
A 41 3_217.4	217.4	12.9	850	1.3	1390	15000	6.4	850	0.63	1820	15000	
A 41 3_240.6	240.6	11.6	850	1.1	1410	15000	5.8	850	0.57	1840	15000	
A 41 3_262.5	262.5	10.7	850	1.0	1430	15000	5.3	850	0.52	1860	15000	
A 41 3_291.7	291.7	9.6	850	0.94	1450	15000	4.8	850	0.47	1880	15000	
A 41 3_324.2	324.2	8.6	850	0.84	1470	15000	4.3	850	0.42	1900	15000	
A 41 3_376.8	376.8	7.4	850	0.73	1500	15000	3.7	850	0.36	1930	15000	

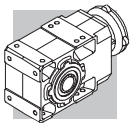

A 41 850 Nm

	i	n_1 = 900 min^{-1}					n_1 = 500 min^{-1}					
		n_2 min^{-1}	M_{n2} Nm	P_{n1} kW	R_{n1} N	R_{n2} N	n_2 min^{-1}	M_{n2} Nm	P_{n1} kW	R_{n1} N	R_{n2} N	
A 41 2_5.2	5.2	172	550	10.5	3140	6850	95	550	5.8	3500	8900	
A 41 2_7.1	7.1	126	550	7.7	3360	7870	70	550	4.3	3500	10100	
A 41 2_8.3	8.3	108	550	6.6	3440	8430	60	550	3.7	3500	10800	
A 41 2_9.2	9.2	98	550	6.0	3500	8800	54	550	3.3	3500	11300	
A 41 2_10.1	10.1	89	610	6.0	3500	8920	49	730	4.0	3500	10900	
A 41 2_11.7	11.7	77	550	4.7	3500	9760	43	550	2.6	3500	12400	
A 41 2_13.8	13.8	65	670	4.9	3500	9900	36	800	3.2	3500	12100	
A 41 2_16.1	16.1	56	700	4.4	3500	10500	31	830	2.9	3500	12800	
A 41 2_17.8	17.8	51	720	4.1	3500	10800	28.1	850	2.7	3500	13300	
A 41 2_22.7	22.7	40	780	3.4	3500	11700	22.0	850	2.1	3500	14800	
A 41 2_28.3	28.3	32	830	2.9	3500	12700	17.7	850	1.7	3500	15000	
A 41 2_35.9	35.9	25.1	850	2.4	3500	14000	13.9	850	1.3	3500	15000	
A 41 2_45.1	45.1	20.0	850	1.9	3500	15000	11.1	850	1.1	3500	15000	
A 41 2_48.3	48.3	18.6	850	1.8	3500	15000	10.4	850	0.98	3500	15000	
A 41 2_53.1	53.1	16.9	850	1.6	3500	15000	9.4	850	0.89	3500	15000	
A 41 2_58.8	58.8	15.3	850	1.4	3500	15000	8.5	850	0.81	3500	15000	283
A 41 2_64.2	64.2	14.0	850	1.3	3300	15000	7.8	850	0.74	3500	15000	
A 41 2_71.3	71.3	12.6	850	1.2	3500	15000	7.0	850	0.66	3500	15000	
A 41 2_79.2	79.2	11.4	800	1.0	3500	15000	6.3	800	0.56	3500	15000	
A 41 3_92.8	92.8	9.7	800	0.89	1080	15000	5.4	800	0.50	2110	15000	
A 41 3_115.9	115.9	7.8	850	0.76	1630	15000	4.3	850	0.42	2200	15000	
A 41 3_146.9	146.9	6.1	850	0.60	2020	15000	3.4	850	0.33	2200	15000	
A 41 3_184.4	184.4	4.9	850	0.48	2100	15000	2.7	850	0.27	2200	15000	
A 41 3_197.5	197.5	4.6	850	0.45	2120	15000	2.5	850	0.25	2200	15000	
A 41 3_217.4	217.4	4.1	850	0.40	2150	15000	2.3	850	0.22	2200	15000	
A 41 3_240.6	240.6	3.7	850	0.37	2170	15000	2.1	850	0.20	2200	15000	
A 41 3_262.5	262.5	3.4	850	0.34	2190	15000	1.9	850	0.19	2200	15000	
A 41 3_291.7	291.7	3.1	850	0.30	2200	15000	1.7	850	0.17	2200	15000	
A 41 3_324.2	324.2	2.8	850	0.27	2200	15000	1.5	850	0.15	2200	15000	
A 41 3_376.8	376.8	2.4	850	0.23	2200	15000	1.3	850	0.13	2200	15000	

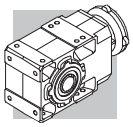

A 50 — 1500 Nm

	i	n_1 = 2800 min^{-1}					n_1 = 1400 min^{-1}					
		n_2 min^{-1}	M_{n2} Nm	P_{n1} kW	R_{n1} N	R_{n2} N	n_2 min^{-1}	M_{n2} Nm	P_{n1} kW	R_{n1} N	R_{n2} N	
A 50 2_7.7	7.7	362	550	22	2300	7920	181	700	14.1	2890	9960	
A 50 2_9.7	9.7	288	600	19.2	2330	8530	144	750	12.0	2950	10800	
A 50 2_13.1	13.1	214	600	14.3	2460	9600	107	750	8.9	3110	12100	
A 50 2_16.6	16.6	169	640	12.0	2490	10400	84	800	7.5	3150	13100	
A 50 2_20.9	20.9	134	640	9.5	2540	11400	67	800	6.0	3210	14400	
A 50 3_24.0	24.0	116	1150	15.4	1850	7020	58	1500	10.0	2100	8540	
A 50 3_26.4	26.4	106	1200	14.6	2100	7170	53	1500	9.1	2690	9100	
A 50 3_32.4	32.4	86	1290	12.8	1800	4630	43	1500	7.5	2760	10400	
A 50 3_35.6	35.6	79	1340	12.1	2080	7830	39	1500	6.8	3290	11000	
A 50 3_40.9	40.9	68	1415	11.1	1740	8130	34	1500	5.9	3220	11900	
A 50 3_45.0	45.0	62	1470	10.5	2030	8340	31	1500	5.4	3440	12600	
A 50 3_51.7	51.7	54	1500	9.4	1680	8970	27.1	1500	4.7	3400	13600	
A 50 3_56.8	56.8	49	1500	8.5	2150	9540	24.6	1500	4.3	3480	14400	
A 50 3_63.9	63.9	44	1500	7.6	1900	10300	21.9	1500	3.8	3450	15300	
A 50 3_70.2	70.2	40	1500	6.9	2350	10900	19.9	1500	3.4	3500	16100	
A 50 3_81.5	81.5	34	1500	5.9	2170	11900	17.2	1500	3.0	3500	17300	
A 50 3_89.5	89.5	31	1500	5.4	2590	12600	15.6	1500	2.7	3500	18200	
A 50 3_99.5	99.5	28.1	1500	4.9	2260	13400	14.1	1500	2.4	3500	19200	
A 50 3_109.4	109.4	25.6	1500	4.4	2680	14100	12.8	1500	2.2	3500	20000	
A 50 3_118.0	118.0	23.7	1500	4.1	2390	14700	11.9	1500	2.0	3500	20000	287
A 50 3_129.7	129.7	21.6	1500	3.7	2720	15400	10.8	1500	1.9	3500	20000	
A 50 3_140.6	140.6	19.9	1500	3.4	2440	16100	10.0	1500	1.7	3500	20000	
A 50 3_154.6	154.6	18.1	1500	3.1	2730	16900	9.1	1500	1.6	3500	20000	
A 50 3_173.4	173.4	16.2	1500	2.8	2480	17900	8.1	1500	1.4	3500	20000	
A 50 3_190.6	190.6	14.7	1500	2.5	2740	18800	7.3	1500	1.3	3500	20000	
A 50 4_211.0	211.0	13.3	1500	2.3	1930	20000	6.6	1500	1.2	2200	20000	
A 50 4_232.0	232.0	12.1	1500	2.1	1970	20000	6.0	1500	1.1	2200	20000	
A 50 4_260.9	260.9	10.7	1500	1.9	2010	20000	5.4	1500	0.95	2200	20000	
A 50 4_286.8	286.8	9.8	1500	1.7	2040	20000	4.9	1500	0.86	2200	20000	
A 50 4_332.6	332.6	8.4	1500	1.5	2080	20000	4.2	1500	0.74	2200	20000	
A 50 4_365.6	365.6	7.7	1500	1.4	2100	20000	3.8	1500	0.68	2200	20000	
A 50 4_406.4	406.4	6.9	1500	1.2	2130	20000	3.4	1500	0.61	2200	20000	
A 50 4_446.8	446.8	6.3	1500	1.1	2140	20000	3.1	1500	0.55	2200	20000	
A 50 4_481.6	481.6	5.8	1500	1.0	2160	20000	2.9	1500	0.51	2200	20000	
A 50 4_529.5	529.5	5.3	1500	0.93	2170	20000	2.6	1500	0.47	2200	20000	
A 50 4_574.2	574.2	4.9	1500	0.86	2190	20000	2.4	1500	0.43	2200	20000	
A 50 4_631.2	631.2	4.4	1500	0.78	2200	20000	2.2	1500	0.39	2200	20000	
A 50 4_707.9	707.9	4.0	1500	0.70	2200	20000	2.0	1500	0.35	2200	20000	
A 50 4_778.2	778.2	3.6	1500	0.63	2200	20000	1.8	1500	0.32	2200	20000	

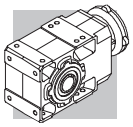

A 50 — 1500 Nm

	i	n_1 = 900 min^{-1}					n_1 = 500 min^{-1}					
		n_2 min^{-1}	M_{n2} Nm	P_{n1} kW	R_{n1} N	R_{n2} N	n_2 min^{-1}	M_{n2} Nm	P_{n1} kW	R_{n1} N	R_{n2} N	
A 50 2_7.7	7.7	116	770	10.0	3430	11700	65	900	6.5	3500	14300	
A 50 2_9.7	9.7	92	830	8.5	3490	12600	51	1000	5.7	3500	15300	
A 50 2_13.1	13.1	69	830	6.3	3500	14200	38	1000	4.2	3500	17300	
A 50 2_16.6	16.6	54	880	5.3	3500	15400	30	1000	3.4	3500	18900	
A 50 2_20.9	20.9	43	880	4.2	3500	16800	23.9	1000	2.7	3500	20000	
A 50 3_24.0	24.0	37	1500	6.5	3480	11300	20.8	1500	3.6	3500	15700	
A 50 3_26.4	26.4	34	1500	5.9	3500	12000	18.9	1500	3.3	3500	16500	
A 50 3_32.4	32.4	27.8	1500	4.8	3500	13400	15.4	1500	2.7	3500	18300	
A 50 3_35.6	35.6	25.3	1500	4.4	3500	14200	14.0	1500	2.4	3500	19200	
A 50 3_40.9	40.9	22.0	1500	3.8	3500	15300	12.2	1500	2.1	3500	20000	
A 50 3_45.0	45.0	20.0	1500	3.5	3500	16000	11.1	1500	1.9	3500	20000	
A 50 3_51.7	51.7	17.4	1500	3.0	3450	17200	9.7	1500	1.7	3500	20000	
A 50 3_56.8	56.8	15.8	1500	2.7	3500	18100	8.8	1500	1.5	3500	20000	
A 50 3_63.9	63.9	14.1	1500	2.4	3500	19200	7.8	1500	1.4	3500	20000	
A 50 3_70.2	70.2	12.8	1500	2.2	3500	20000	7.1	1500	1.2	3500	20000	
A 50 3_81.5	81.5	11.0	1500	1.9	3500	20000	6.1	1500	1.1	3500	20000	
A 50 3_89.5	89.5	10.1	1500	1.7	3500	20000	5.6	1500	0.96	3500	20000	
A 50 3_99.5	99.5	9.0	1500	1.6	3500	20000	5.0	1500	0.87	3500	20000	
A 50 3_109.4	109.4	8.2	1500	1.4	3500	20000	4.6	1500	0.79	3500	20000	
A 50 3_118.0	118.0	7.6	1500	1.3	3500	20000	4.2	1500	0.73	3500	20000	287
A 50 3_129.7	129.7	6.9	1500	1.2	3500	20000	3.9	1500	0.67	3500	20000	
A 50 3_140.6	140.6	6.4	1500	1.1	3500	20000	3.6	1500	0.61	3500	20000	
A 50 3_154.6	154.6	5.8	1500	1.0	3500	20000	3.2	1500	0.56	3500	20000	
A 50 3_173.4	173.4	5.2	1500	0.90	3500	20000	2.9	1500	0.50	3500	20000	
A 50 3_190.6	190.6	4.7	1500	0.82	3500	20000	2.6	1500	0.45	3500	20000	
A 50 4_211.0	211.0	4.3	1500	0.75	2200	20000	2.4	1500	0.42	2200	20000	
A 50 4_232.0	232.0	3.9	1500	0.68	2200	20000	2.2	1500	0.38	2200	20000	
A 50 4_260.9	260.9	3.4	1500	0.61	2200	20000	1.9	1500	0.34	2200	20000	
A 50 4_286.8	286.8	3.1	1500	0.55	2200	20000	1.7	1500	0.31	2200	20000	
A 50 4_332.6	332.6	2.7	1500	0.48	2200	20000	1.5	1500	0.27	2200	20000	
A 50 4_365.6	365.6	2.5	1500	0.43	2200	20000	1.4	1500	0.24	2200	20000	
A 50 4_406.4	406.4	2.2	1500	0.39	2200	20000	1.2	1500	0.22	2200	20000	
A 50 4_446.8	446.8	2.0	1500	0.36	2200	20000	1.1	1500	0.20	2200	20000	
A 50 4_481.6	481.6	1.9	1500	0.33	2200	20000	1.0	1500	0.18	2200	20000	
A 50 4_529.5	529.5	1.7	1500	0.30	2200	20000	0.94	1500	0.17	2200	20000	
A 50 4_574.2	574.2	1.6	1500	0.28	2200	20000	0.87	1500	0.15	2200	20000	
A 50 4_631.2	631.2	1.4	1500	0.25	2200	20000	0.79	1500	0.14	2200	20000	
A 50 4_707.9	707.9	1.3	1500	0.22	2200	20000	0.71	1500	0.12	2200	20000	
A 50 4_778.2	778.2	1.2	1500	0.20	2200	20000	0.64	1500	0.11	2200	20000	

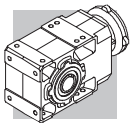

A 55 — 2000 Nm

	i	n_1 = 2800 min^{-1}					n_1 = 1400 min^{-1}					
		n_2 min^{-1}	M_{n2} Nm	P_{n1} kW	R_{n1} N	R_{n2} N	n_2 min^{-1}	M_{n2} Nm	P_{n1} kW	R_{n1} N	R_{n2} N	
A 55 2_4.9	4.9	571	760	48	1320	15100	286	900	28	2150	18700	291
A 55 2_6.4	6.4	438	800	39	1950	16400	219	950	23	2860	20300	
A 55 2_8.5	8.5	329	800	30	2810	18000	165	950	17.5	3500	22200	
A 55 2_10.4	10.4	269	840	25	2900	19100	135	1000	15.1	3500	23600	
A 55 2_13.1	13.1	214	840	20	3230	20600	107	1000	11.9	3500	25500	
A 55 2_15.7	15.7	178	840	16.7	3440	21900	89	1000	9.9	3500	27000	
A 55 2_19.2	19.2	146	925	15.0	3160	23200	73	1100	8.9	3500	28600	
A 55 3_23.8	23.8	118	1600	22	2050	21000	59	1950	13.2	2640	26000	
A 55 3_29.9	29.9	94	1700	18.3	2110	22500	47	2000	10.8	2770	28200	
A 55 3_40.3	40.3	69	1850	14.8	2150	24800	35	2000	8.0	2930	30000	
A 55 3_51.0	51.0	55	2000	12.6	2170	26500	27.5	2000	6.3	3050	30000	
A 55 3_64.3	64.3	44	2000	10.0	2230	29000	21.8	2000	5.0	3110	30000	
A 55 3_79.5	79.5	35	2000	8.1	1040	30000	17.6	2000	4.1	2820	30000	
A 55 3_101.4	101.4	27.6	2000	6.4	1340	30000	13.8	2000	3.2	3130	30000	
A 55 3_123.9	123.9	22.6	2000	5.2	1450	30000	11.3	2000	2.6	3230	30000	
A 55 3_132.7	132.7	21.1	2000	4.9	1450	30000	10.6	2000	2.4	3240	30000	
A 55 3_146.8	146.8	19.1	2000	4.4	1610	30000	9.5	2000	2.2	3290	30000	
A 55 3_160.4	160.4	17.5	2000	4.0	1660	30000	8.7	2000	2.0	3300	30000	
A 55 3_175.0	175.0	16.0	2000	3.7	1660	30000	8.0	2000	1.8	3300	30000	
A 55 3_194.2	194.2	14.4	2000	3.3	1710	30000	7.2	2000	1.7	3310	30000	
A 55 4_208.1	208.1	13.5	1600	2.5	1890	30000	6.7	1950	1.5	2200	30000	
A 55 4_262.6	262.6	10.7	1650	2.1	1980	30000	5.3	2000	1.3	2200	30000	
A 55 4_324.7	324.7	8.6	1750	1.8	2030	30000	4.3	2000	1.0	2200	30000	
A 55 4_414.0	414.0	6.8	1850	1.5	2080	30000	3.4	2000	0.80	2200	30000	
A 55 4_505.9	505.9	5.5	1900	1.2	2120	30000	2.8	2000	0.65	2200	30000	
A 55 4_542.0	542.0	5.2	1900	1.2	2140	30000	2.6	2000	0.61	2200	30000	
A 55 4_599.5	599.5	4.7	1950	1.1	2150	30000	2.3	2000	0.55	2200	30000	
A 55 4_655.1	655.1	4.3	1950	1.0	2180	30000	2.1	2000	0.50	2200	30000	
A 55 4_714.7	714.7	3.9	1950	0.90	2200	30000	2.0	2000	0.46	2200	30000	
A 55 4_793.0	793.0	3.5	2000	0.83	2200	30000	1.8	2000	0.42	2200	30000	

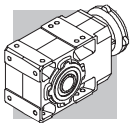

A 55 — 2000 Nm

	i	n_1 = 900 min^{-1}					n_1 = 500 min^{-1}					
		n_2 min^{-1}	M_{n2} Nm	P_{n1} kW	R_{n1} N	R_{n2} N	n_2 min^{-1}	M_{n2} Nm	P_{n1} kW	R_{n1} N	R_{n2} N	
A 55 2_4.9	4.9	184	1000	20	2850	21400	102	1160	13.1	3500	25600	291
A 55 2_6.4	6.4	141	1060	16.6	3500	23200	78	1230	10.7	3500	27700	
A 55 2_8.5	8.5	106	1060	12.6	3500	25400	59	1230	8.1	3500	30000	
A 55 2_10.4	10.4	87	1120	10.8	3500	27000	48	1290	6.9	3500	30000	
A 55 2_13.1	13.1	69	1120	8.6	3500	29100	38	1290	5.5	3500	30000	
A 55 2_15.7	15.7	57	1120	7.2	3500	30000	32	1290	4.6	3500	30000	
A 55 2_19.2	19.2	47	1230	6.4	3500	30000	26.0	1420	4.1	3500	30000	
A 55 3_23.8	23.8	38	2000	8.7	3280	30000	21.0	2000	4.8	3500	30000	
A 55 3_29.9	29.9	30	2000	6.9	3450	30000	16.7	2000	3.8	3500	30000	
A 55 3_40.3	40.3	22.3	2000	5.1	3500	30000	12.4	2000	2.9	3500	30000	
A 55 3_51.0	51.0	17.6	2000	4.1	3500	30000	9.8	2000	2.3	3500	30000	
A 55 3_64.3	64.3	14.0	2000	3.2	3500	30000	7.8	2000	1.8	3500	30000	
A 55 3_79.5	79.5	11.3	2000	2.6	3500	30000	6.3	2000	1.4	3500	30000	
A 55 3_101.4	101.4	8.9	2000	2.0	3500	30000	4.9	2000	1.1	3500	30000	
A 55 3_123.9	123.9	7.3	2000	1.7	3500	30000	4.0	2000	0.93	3500	30000	
A 55 3_132.7	132.7	6.8	2000	1.6	3500	30000	3.8	2000	0.87	3500	30000	
A 55 3_146.8	146.8	6.1	2000	1.4	3500	30000	3.4	2000	0.78	3500	30000	
A 55 3_160.4	160.4	5.6	2000	1.3	3500	30000	3.1	2000	0.72	3500	30000	
A 55 3_175.0	175.0	5.1	2000	1.2	3500	30000	2.9	2000	0.66	3500	30000	
A 55 3_194.2	194.2	4.6	2000	1.1	3500	30000	2.6	2000	0.59	3500	30000	
A 55 4_208.1	208.1	4.3	2000	1.0	2200	30000	2.4	2000	0.57	2200	30000	
A 55 4_262.6	262.6	3.4	2000	0.81	2200	30000	1.9	2000	0.45	2200	30000	
A 55 4_324.7	324.7	2.8	2000	0.65	2200	30000	1.5	2000	0.36	2200	30000	
A 55 4_414.0	414.0	2.2	2000	0.51	2200	30000	1.2	2000	0.28	2200	30000	
A 55 4_505.9	505.9	1.8	2000	0.42	2200	30000	1.0	2000	0.23	2200	30000	
A 55 4_542.0	542.0	1.7	2000	0.39	2200	30000	0.92	2000	0.22	2200	30000	
A 55 4_599.5	599.5	1.5	2000	0.35	2200	30000	0.83	2000	0.20	2200	30000	
A 55 4_655.1	655.1	1.4	2000	0.32	2200	30000	0.76	2000	0.18	2200	30000	
A 55 4_714.7	714.7	1.3	2000	0.30	2200	30000	0.70	2000	0.16	2200	30000	
A 55 4_793.0	793.0	1.1	2000	0.27	2200	30000	0.63	2000	0.15	2200	30000	

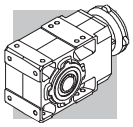

A 60 — 2800 Nm

	i	n_1 = 2800 min^{-1}					n_1 = 1400 min^{-1}					
		n_2 min^{-1}	M_{n2} Nm	P_{n1} kW	R_{n1} N	R_{n2} N	n_2 min^{-1}	M_{n2} Nm	P_{n1} kW	R_{n1} N	R_{n2} N	
A 60 2_7.9	7.9	356	950	38	2770	22500	178	1200	24	3400	27700	
A 60 2_10.3	10.3	271	950	29	2970	24600	136	1200	18.1	3740	30000	
A 60 2_12.7	12.7	220	1000	25	3020	26200	110	1250	15.3	3810	30000	
A 60 2_16.7	16.7	167	1050	19.6	3080	28600	84	1300	12.1	3910	30000	
A 60 2_20.6	20.6	136	1100	16.7	3100	30000	68	1400	10.6	3890	30000	
A 60 3_25.7	25.7	109	2760	35	2380	26900	54	2800	17.5	3800	30000	
A 60 3_27.9	27.9	101	2800	32	2780	27700	50	2800	16.2	3930	30000	
A 60 3_31.7	31.7	88	2800	29	2790	29000	44	2800	14.2	3940	30000	
A 60 3_34.3	34.3	82	2800	26	2920	30000	41	2800	13.2	4060	30000	
A 60 3_41.7	41.7	67	2800	22	2940	30000	34	2800	10.8	4090	30000	
A 60 3_45.2	45.2	62	2800	20	3060	30000	31	2800	10.0	4200	30000	
A 60 3_51.3	51.3	55	2800	17.6	3030	30000	27.3	2800	8.8	4180	30000	
A 60 3_55.6	55.6	50	2800	16.2	3140	30000	25.2	2800	8.1	4280	30000	
A 60 3_65.0	65.0	43	2800	13.9	3110	30000	21.5	2800	6.9	4260	30000	
A 60 3_70.4	70.4	40	2800	12.8	3210	30000	19.9	2800	6.4	4360	30000	
A 60 3_79.7	79.7	35	2800	11.3	3160	30000	17.6	2800	5.7	4310	30000	
A 60 3_86.4	86.4	32	2800	10.4	3260	30000	16.2	2800	5.2	4410	30000	
A 60 3_99.5	99.5	28.1	2800	9.1	3210	30000	14.1	2800	4.5	4360	30000	
A 60 3_107.8	107.8	26.0	2800	8.4	3300	30000	13.0	2800	4.2	4450	30000	
A 60 3_123.0	123.0	22.8	2800	7.3	3250	30000	11.4	2800	3.7	4400	30000	295
A 60 3_133.3	133.3	21.0	2800	6.8	3340	30000	10.5	2800	3.4	4490	30000	
A 60 3_144.0	144.0	19.4	2800	6.3	3280	30000	9.7	2800	3.1	4420	30000	
A 60 3_156.0	156.0	17.9	2800	5.8	3360	30000	9.0	2800	2.9	4510	30000	
A 60 3_171.5	171.5	16.3	2800	5.3	3290	30000	8.2	2800	2.6	4430	30000	
A 60 3_185.8	185.8	15.1	2800	4.9	3370	30000	7.5	2800	2.4	4520	30000	
A 60 4_208.7	208.7	13.4	2800	4.4	2720	30000	6.7	2800	2.2	3500	30000	
A 60 4_226.1	226.1	12.4	2800	4.1	2770	30000	6.2	2800	2.0	3500	30000	
A 60 4_264.3	264.3	10.6	2800	3.5	2860	30000	5.3	2800	1.7	3500	30000	
A 60 4_286.3	286.3	9.8	2800	3.2	2900	30000	4.9	2800	1.6	3500	30000	
A 60 4_324.2	324.2	8.6	2800	2.8	2960	30000	4.3	2800	1.4	3500	30000	
A 60 4_351.2	351.2	8.0	2800	2.6	2990	30000	4.0	2800	1.3	3500	30000	
A 60 4_404.7	404.7	6.9	2800	2.3	3050	30000	3.5	2800	1.1	3500	30000	
A 60 4_438.4	438.4	6.4	2800	2.1	3070	30000	3.2	2800	1.1	3500	30000	
A 60 4_500.3	500.3	5.6	2800	1.8	3110	30000	2.8	2800	0.92	3500	30000	
A 60 4_542.0	542.0	5.2	2800	1.7	3140	30000	2.6	2800	0.85	3500	30000	
A 60 4_585.8	585.8	4.8	2800	1.6	3150	30000	2.4	2800	0.79	3500	30000	
A 60 4_634.6	634.6	4.4	2800	1.5	3170	30000	2.2	2800	0.73	3500	30000	
A 60 4_697.3	697.3	4.0	2800	1.3	3190	30000	2.0	2800	0.66	3500	30000	
A 60 4_755.4	755.4	3.7	2800	1.2	3210	30000	1.9	2800	0.61	3500	30000	

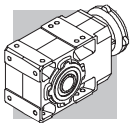

A 60 — 2800 Nm

	i	n_1 = 900 min^{-1}					n_1 = 500 min^{-1}					
		n_2 min^{-1}	M_{n2} Nm	P_{n1} kW	R_{n1} N	R_{n2} N	n_2 min^{-1}	M_{n2} Nm	P_{n1} kW	R_{n1} N	R_{n2} N	
A 60 2_7.9	7.9	114	1300	16.6	4190	30000	64	1550	11.0	4700	30000	
A 60 2_10.3	10.3	87	1300	12.6	4470	30000	48	1550	8.4	4700	30000	
A 60 2_12.7	12.7	71	1400	11.0	4490	30000	39	1700	7.5	4700	30000	
A 60 2_16.7	16.7	54	1450	8.7	4610	30000	29.9	1700	5.7	4700	30000	
A 60 2_20.6	20.6	44	1550	7.5	4600	30000	24.3	1800	4.9	4700	30000	
A 60 3_25.7	25.7	35	2800	11.3	4680	30000	19.4	2800	6.3	4700	30000	
A 60 3_27.9	27.9	32	2800	10.4	4700	30000	18.0	2800	5.8	4700	30000	
A 60 3_31.7	31.7	28.4	2800	9.2	4700	30000	15.8	2800	5.1	4700	30000	
A 60 3_34.3	34.3	26.2	2800	8.5	4700	30000	14.6	2800	4.7	4700	30000	
A 60 3_41.7	41.7	21.6	2800	7.0	4700	30000	12.0	2800	3.9	4700	30000	
A 60 3_45.2	45.2	19.9	2800	6.4	4700	30000	11.1	2800	3.6	4700	30000	
A 60 3_51.3	51.3	17.5	2800	5.6	4700	30000	9.7	2800	3.1	4700	30000	
A 60 3_55.6	55.6	16.2	2800	5.2	4700	30000	9.0	2800	2.9	4700	30000	
A 60 3_65.0	65.0	13.8	2800	4.5	4700	30000	7.7	2800	2.5	4700	30000	
A 60 3_70.4	70.4	12.8	2800	4.1	4700	30000	7.1	2800	2.3	4700	30000	
A 60 3_79.7	79.7	11.3	2800	3.6	4700	30000	6.3	2800	2.0	4700	30000	
A 60 3_86.4	86.4	10.4	2800	3.4	4700	30000	5.8	2800	1.9	4700	30000	
A 60 3_99.5	99.5	9.0	2800	2.9	4700	30000	5.0	2800	1.6	4700	30000	
A 60 3_107.8	107.8	8.3	2800	2.7	4700	30000	4.6	2800	1.5	4700	30000	
A 60 3_123.0	123.0	7.3	2800	2.4	4700	30000	4.1	2800	1.3	4700	30000	295
A 60 3_133.3	133.3	6.8	2800	2.2	4700	30000	3.8	2800	1.2	4700	30000	
A 60 3_144.0	144.0	6.2	2800	2.0	4700	30000	3.5	2800	1.1	4700	30000	
A 60 3_156.0	156.0	5.8	2800	1.9	4700	30000	3.2	2800	1.0	4700	30000	
A 60 3_171.5	171.5	5.2	2800	1.7	4700	30000	2.9	2800	0.94	4700	30000	
A 60 3_185.8	185.8	4.8	2800	1.6	4700	30000	2.7	2800	0.87	4700	30000	
A 60 4_208.7	208.7	4.3	2800	1.4	3500	30000	2.4	2800	0.79	3500	30000	
A 60 4_226.1	226.1	4.0	2800	1.3	3500	30000	2.2	2800	0.73	3500	30000	
A 60 4_264.3	264.3	3.4	2800	1.1	3500	30000	1.9	2800	0.62	3500	30000	
A 60 4_286.3	286.3	3.1	2800	1.0	3500	30000	1.7	2800	0.58	3500	30000	
A 60 4_324.2	324.2	2.8	2800	0.91	3500	30000	1.5	2800	0.51	3500	30000	
A 60 4_351.2	351.2	2.6	2800	0.84	3500	30000	1.4	2800	0.47	3500	30000	
A 60 4_404.7	404.7	2.2	2800	0.73	3500	30000	1.2	2800	0.41	3500	30000	
A 60 4_438.4	438.4	2.1	2800	0.68	3500	30000	1.1	2800	0.38	3500	30000	
A 60 4_500.3	500.3	1.8	2800	0.59	3500	30000	1.0	2800	0.33	3500	30000	
A 60 4_542.0	542.0	1.7	2800	0.55	3500	30000	0.92	2800	0.30	3500	30000	
A 60 4_585.8	585.8	1.5	2800	0.51	3500	30000	0.85	2800	0.28	3500	30000	
A 60 4_634.6	634.6	1.4	2800	0.47	3500	30000	0.79	2800	0.26	3500	30000	
A 60 4_697.3	697.3	1.3	2800	0.43	3500	30000	0.72	2800	0.24	3500	30000	
A 60 4_755.4	755.4	1.2	2800	0.39	3500	30000	0.66	2800	0.22	3500	30000	

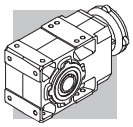

A 70 — 5000 Nm

	i	n_1 = 2800 min^{-1}					n_1 = 1400 min^{-1}					
		n_2 min^{-1}	M_{n2} Nm	P_{n1} kW	R_{n1} N	R_{n2} N	n_2 min^{-1}	M_{n2} Nm	P_{n1} kW	R_{n1} N	R_{n2} N	
A 70 3_9.4	9.4	297	2300	79	1900	25900	148	2800	48	2550	31900	299
A 70 3_10.2	10.2	274	2400	76	2480	26400	137	3200	50	1480	31900	
A 70 3_12.1	12.1	232	2400	64	2420	28000	116	3200	43	1400	33900	
A 70 3_13.1	13.1	214	2600	64	2420	28400	107	3350	41	2100	34600	
A 70 3_15.4	15.4	182	2700	56	2100	29900	91	3350	35	2430	36700	
A 70 3_16.7	16.7	168	2850	55	2500	30400	84	3600	35	2590	37200	
A 70 3_19.7	19.7	142	2900	48	2030	32100	71	3700	30	1790	39300	
A 70 3_21.3	21.3	131	3000	45	2750	32900	66	4000	30	1830	39800	
A 70 3_23.5	23.5	119	3500	48	4930	32900	60	4300	30	6250	40500	
A 70 3_27.8	27.8	101	3450	40	4960	35100	50	4200	24	6300	43300	
A 70 3_30.1	30.1	93	3700	40	4970	35600	47	4550	24	6300	43900	
A 70 3_35.4	35.4	79	3650	33	5040	37900	40	4500	21	6370	46600	
A 70 3_38.4	38.4	73	3950	33	5040	38400	36	4850	20	6380	47300	
A 70 3_45.2	45.2	62	3900	28	5050	40800	31	4800	17.1	6400	50000	
A 70 3_49.0	49.0	57	4250	28	5050	41300	28.6	5000	16.4	6450	50000	
A 70 3_53.2	53.2	53	4100	25	5030	42900	26.3	5000	15.1	6380	50000	
A 70 3_57.7	57.7	49	4450	25	5030	43400	24.3	5000	14.0	6490	50000	
A 70 3_66.9	66.9	42	4350	21	5050	46000	20.9	5000	12.0	6480	50000	
A 70 3_72.5	72.5	39	4750	21	5040	46500	19.3	5000	11.1	6580	50000	
A 70 3_79.3	79.3	35	4600	18.7	5020	48400	17.6	5000	10.2	6520	50000	
A 70 3_85.9	85.9	33	4950	18.6	5030	49100	16.3	5000	9.4	6620	50000	
A 70 3_96.2	96.2	29.1	4850	16.2	5000	50000	14.6	5000	8.4	6570	50000	
A 70 3_104.2	104.2	26.9	5000	15.5	5060	50000	13.4	5000	7.7	6660	50000	
A 70 3_120.6	120.6	23.2	5000	13.4	5010	50000	11.6	5000	6.7	6610	50000	
A 70 3_130.7	130.7	21.4	5000	12.3	5100	50000	10.7	5000	6.2	6690	50000	
A 70 3_141.9	141.9	19.7	5000	11.4	5040	50000	9.9	5000	5.7	6640	50000	
A 70 3_153.7	153.7	18.2	3300	6.9	5410	50000	9.1	4050	4.2	6920	50000	
A 70 4_169.8	169.8	16.5	5000	9.7	1130	50000	8.2	5000	4.9	2520	50000	
A 70 4_183.9	183.9	15.2	5000	9.0	1450	50000	7.6	5000	4.5	2670	50000	
A 70 4_220.3	220.3	12.7	5000	7.5	1560	50000	6.4	5000	3.7	2710	50000	
A 70 4_238.6	238.6	11.7	5000	6.9	1860	50000	5.9	5000	3.5	2770	50000	
A 70 4_292.0	292.0	9.6	5000	5.6	1900	50000	4.8	5000	2.8	2790	50000	
A 70 4_316.4	316.4	8.9	5000	5.2	2110	50000	4.4	5000	2.6	2850	50000	
A 70 4_369.4	369.4	7.6	5000	4.5	2110	50000	3.8	5000	2.2	2840	50000	
A 70 4_400.2	400.2	7.0	5000	4.1	2160	50000	3.5	5000	2.1	2900	50000	
A 70 4_475.8	475.8	5.9	5000	3.5	2150	50000	2.9	5000	1.7	2890	50000	
A 70 4_515.4	515.4	5.4	5000	3.2	2200	50000	2.7	5000	1.6	2940	50000	
A 70 4_595.0	595.0	4.7	5000	2.8	2190	50000	2.4	5000	1.4	2920	50000	
A 70 4_644.6	644.6	4.3	5000	2.6	2230	50000	2.2	5000	1.3	2970	50000	
A 70 4_705.1	705.1	4.0	5000	2.3	2200	50000	2.0	5000	1.2	2940	50000	
A 70 4_763.9	763.9	3.7	5000	2.2	2250	50000	1.8	5000	1.1	2990	50000	
A 70 4_855.3	855.3	3.3	5000	1.9	2220	50000	1.6	5000	0.96	2960	50000	
A 70 4_926.5	926.5	3.0	5000	1.8	2270	50000	1.5	5000	0.89	3000	50000	
A 70 4_1072	1072	2.6	5000	1.5	2240	50000	1.3	5000	0.77	2970	50000	
A 70 4_1161	1161	2.4	5000	1.4	2280	50000	1.2	5000	0.71	3020	50000	
A 70 4_1242	1242	2.3	5000	1.3	2250	50000	1.1	5000	0.66	2980	50000	
A 70 4_1346	1346	2.1	5000	1.2	2290	50000	1.0	5000	0.61	3030	50000	
A 70 4_1583	1583	1.8	5000	1.0	2260	50000	0.88	5000	0.52	2990	50000	
A 70 4_1715	1715	1.6	5000	0.96	2300	50000	0.82	5000	0.48	3040	50000	

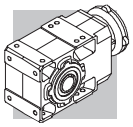

A 70 — 5000 Nm

	i	n_1 = 900 min^{-1}					n_1 = 500 min^{-1}					
		n_2 min^{-1}	M_{n2} Nm	P_{n1} kW	R_{n1} N	R_{n2} N	n_2 min^{-1}	M_{n2} Nm	P_{n1} kW	R_{n1} N	R_{n2} N	
A 70 3_9.4	9.4	95	3000	33	4290	36900	53	3000	18.3	7000	45400	299
A 70 3_10.2	10.2	88	3250	33	4290	37400	49	3250	18.3	7000	46100	
A 70 3_12.1	12.1	75	3650	31	1620	38700	41	3650	17.4	6470	47900	
A 70 3_13.1	13.1	69	3950	31	1650	39200	38	3950	17.4	6500	48600	
A 70 3_15.4	15.4	58	3700	25	3510	42200	32	3700	13.8	7000	50000	
A 70 3_16.7	16.7	54	4000	25	3560	42800	30	4000	13.8	7000	50000	
A 70 3_19.7	19.7	46	3700	19.5	4910	46100	25.4	3700	10.8	7000	50000	
A 70 3_21.3	21.3	42	4000	19.4	4950	46800	23.5	4000	10.8	7000	50000	
A 70 3_23.5	23.5	38	4900	21.6	7000	46300	21.3	5000	12.2	7000	50000	
A 70 3_27.8	27.8	32	4800	17.9	7000	49400	18.0	5000	10.4	7000	50000	
A 70 3_30.1	30.1	29.9	5000	17.2	7000	50000	16.6	5000	9.6	7000	50000	
A 70 3_35.4	35.4	25.4	5000	14.6	7000	50000	14.1	5000	8.1	7000	50000	
A 70 3_38.4	38.4	23.4	5000	13.5	7000	50000	13.0	5000	7.5	7000	50000	
A 70 3_45.2	45.2	19.9	5000	11.4	7000	50000	11.1	5000	6.4	7000	50000	
A 70 3_49.0	49.0	18.4	5000	10.6	7000	50000	10.2	5000	5.9	7000	50000	
A 70 3_53.2	53.2	16.9	5000	9.7	7000	50000	9.4	5000	5.4	7000	50000	
A 70 3_57.7	57.7	15.6	5000	9.0	7000	50000	8.7	5000	5.0	7000	50000	
A 70 3_66.9	66.9	13.4	5000	7.7	7000	50000	7.5	5000	4.3	7000	50000	
A 70 3_72.5	72.5	12.4	5000	7.1	7000	50000	6.9	5000	4.0	7000	50000	
A 70 3_79.3	79.3	11.3	5000	6.5	7000	50000	6.3	5000	3.6	7000	50000	
A 70 3_85.9	85.9	10.5	5000	6.0	7000	50000	5.8	5000	3.3	7000	50000	
A 70 3_96.2	96.2	9.4	5000	5.4	7000	50000	5.2	5000	3.0	7000	50000	
A 70 3_104.2	104.2	8.6	5000	5.0	7000	50000	4.8	5000	2.8	7000	50000	
A 70 3_120.6	120.6	7.5	5000	4.3	7000	50000	4.1	5000	2.4	7000	50000	
A 70 3_130.7	130.7	6.9	5000	4.0	7000	50000	3.8	5000	2.2	7000	50000	
A 70 3_141.9	141.9	6.3	5000	3.7	7000	50000	3.5	5000	2.0	7000	50000	
A 70 3_153.7	153.7	5.9	4600	3.1	7000	50000	3.3	5000	1.9	7000	50000	
A 70 4_169.8	169.8	5.3	5000	3.1	3170	50000	2.9	5000	1.7	3500	50000	
A 70 4_183.9	183.9	4.9	5000	2.9	3240	50000	2.7	5000	1.6	3500	50000	
A 70 4_220.3	220.3	4.1	5000	2.4	3270	50000	2.3	5000	1.3	3500	50000	
A 70 4_238.6	238.6	3.8	5000	2.2	3340	50000	2.1	5000	1.2	3500	50000	
A 70 4_292.0	292.0	3.1	5000	1.8	3350	50000	1.7	5000	1.0	3500	50000	
A 70 4_316.4	316.4	2.8	5000	1.7	3410	50000	1.6	5000	0.93	3500	50000	
A 70 4_369.4	369.4	2.4	5000	1.4	3410	50000	1.4	5000	0.80	3500	50000	
A 70 4_400.2	400.2	2.2	5000	1.3	3460	50000	1.2	5000	0.74	3500	50000	
A 70 4_475.8	475.8	1.9	5000	1.1	3450	50000	1.1	5000	0.62	3500	50000	
A 70 4_515.4	515.4	1.7	5000	1.0	3500	50000	0.97	5000	0.57	3500	50000	
A 70 4_595.0	595.0	1.5	5000	0.89	3480	50000	0.84	5000	0.49	3500	50000	
A 70 4_644.6	644.6	1.4	5000	0.82	3500	50000	0.78	5000	0.46	3500	50000	
A 70 4_705.1	705.1	1.3	5000	0.75	3500	50000	0.71	5000	0.42	3500	50000	
A 70 4_763.9	763.9	1.2	5000	0.69	3500	50000	0.65	5000	0.39	3500	50000	
A 70 4_855.3	855.3	1.1	5000	0.62	3500	50000	0.58	5000	0.34	3500	50000	
A 70 4_926.5	926.5	0.97	5000	0.57	3500	50000	0.54	5000	0.32	3500	50000	
A 70 4_1072	1072	0.84	5000	0.49	3500	50000	0.47	5000	0.27	3500	50000	
A 70 4_1161	1161	0.77	5000	0.46	3500	50000	0.43	5000	0.25	3500	50000	
A 70 4_1242	1242	0.72	5000	0.43	3500	50000	0.40	5000	0.24	3500	50000	
A 70 4_1346	1346	0.67	5000	0.39	3500	50000	0.37	5000	0.22	3500	50000	
A 70 4_1583	1583	0.57	5000	0.33	3500	50000	0.32	5000	0.19	3500	50000	
A 70 4_1715	1715	0.52	5000	0.31	3500	50000	0.29	5000	0.17	3500	50000	

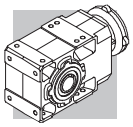

A 80 — 8000 Nm

	i	n_1 = 2800 min^{-1}					n_1 = 1400 min^{-1}					
		n_2 min^{-1}	M_{n2} Nm	P_{n1} kW	R_{n1} N	R_{n2} N	n_2 min^{-1}	M_{n2} Nm	P_{n1} kW	R_{n1} N	R_{n2} N	
A 80 3_9.8	9.8	285	3100	102	—	26300	142	3900	64	—	32100	302
A 80 3_10.7	10.7	263	3450	104	—	26300	131	4300	65	—	32300	
A 80 3_12.3	12.3	228	3450	91	—	27700	114	4300	56	—	34000	
A 80 3_13.3	13.3	211	3450	84	1150	28700	105	4300	52	1150	35200	
A 80 3_15.5	15.5	181	3300	69	1560	30600	91	4100	43	1730	37600	
A 80 3_16.7	16.7	167	3600	69	1440	30900	84	4500	43	1460	37900	
A 80 3_19.3	19.3	145	3500	58	1870	32800	72	4400	37	1880	40200	
A 80 3_20.9	20.9	134	3840	59	1670	33100	67	4800	37	1740	40600	
A 80 3_22.6	22.6	124	5050	72	4500	31200	62	6250	45	5830	38400	
A 80 3_24.5	24.5	114	5500	72	4470	31300	57	6750	44	5840	38600	
A 80 3_28.2	28.2	99	5350	61	4700	33500	50	6600	38	5960	41200	
A 80 3_30.6	30.6	92	5250	55	4840	34900	46	6450	34	6140	43000	
A 80 3_35.5	35.5	79	5700	52	4700	36000	39	7000	32	6000	44300	
A 80 3_38.5	38.5	73	6150	51	4720	36200	36	7600	32	6000	44500	
A 80 3_44.5	44.5	63	6050	44	4790	38600	31	7450	27	6070	47500	
A 80 3_48.2	48.2	58	6550	44	4790	38800	29.1	8000	27	6090	47900	
A 80 3_55.2	55.2	51	6400	37	4710	41300	25.4	7900	23	6050	50800	
A 80 3_59.8	59.8	47	6950	37	4690	41500	23.4	8000	22	6170	52300	
A 80 3_66.8	66.8	42	6800	33	4670	43700	21.0	8000	19.3	6150	54600	
A 80 3_72.4	72.4	39	7350	33	4680	44000	19.3	8000	17.8	6280	56500	
A 80 3_82.3	82.3	34	7200	28	4570	46600	17.0	8000	15.7	6230	59300	
A 80 3_89.2	89.2	31	7800	28	4570	46900	15.7	8000	14.5	6350	61400	
A 80 3_96.0	96.0	29.2	7500	25	4410	48900	14.6	8000	13.4	6260	63000	
A 80 3_104.0	104.0	26.9	8000	25	4500	49500	13.5	8000	12.4	6380	65000	
A 80 3_116.0	116.0	24.1	7950	22	4230	51700	12.1	8000	11.1	6300	65000	
A 80 3_125.6	125.6	22.3	8000	21	4630	53400	11.1	8000	10.3	6420	65000	
A 80 3_144.7	144.7	19.3	8000	17.8	4320	56400	9.7	8000	8.9	6350	65000	
A 80 3_156.8	156.8	17.9	8000	16.4	4750	58300	8.9	8000	8.2	6460	65000	
A 80 4_171.3	171.3	16.3	8000	15.4	—	65000	8.2	8000	7.7	1230	65000	
A 80 4_214.7	214.7	13.0	8000	12.3	—	65000	6.5	8000	6.1	1400	65000	
A 80 4_232.6	232.6	12.0	8000	11.3	—	65000	6.0	8000	5.7	1810	65000	
A 80 4_277.3	277.3	10.1	8000	9.5	540	65000	5.0	8000	4.8	1930	65000	
A 80 4_300.4	300.4	9.3	8000	8.8	900	65000	4.7	8000	4.4	2290	65000	
A 80 4_354.0	354.0	7.9	8000	7.4	800	65000	4.0	8000	3.7	2190	65000	
A 80 4_383.5	383.5	7.3	8000	6.9	1140	65000	3.7	8000	3.4	2530	65000	
A 80 4_442.1	442.1	6.3	8000	6.0	1040	65000	3.2	8000	3.0	2430	65000	
A 80 4_478.9	478.9	5.8	8000	5.5	1370	65000	2.9	8000	2.8	2670	65000	
A 80 4_560.5	560.5	5.0	8000	4.7	1240	65000	2.5	8000	2.4	2630	65000	
A 80 4_607.2	607.2	4.6	8000	4.3	1550	65000	2.3	8000	2.2	2720	65000	
A 80 4_703.5	703.5	4.0	8000	3.7	1440	65000	2.0	8000	1.9	2690	65000	
A 80 4_762.1	762.1	3.7	8000	3.5	1730	65000	1.8	8000	1.7	2760	65000	
A 80 4_829.5	829.5	3.4	8000	3.2	1530	65000	1.7	8000	1.6	2720	65000	
A 80 4_898.7	898.7	3.1	8000	2.9	1820	65000	1.6	8000	1.5	2780	65000	
A 80 4_1001	1001	2.8	8000	2.6	1620	65000	1.4	8000	1.3	2740	65000	
A 80 4_1085	1085	2.6	8000	2.4	1900	65000	1.3	8000	1.2	2800	65000	
A 80 4_1237	1237	2.3	8000	2.1	1660	65000	1.1	8000	1.1	2750	65000	
A 80 4_1340	1340	2.1	8000	2.0	1940	65000	1.0	8000	0.98	2810	65000	
A 80 4_1438	1438	1.9	8000	1.8	1730	65000	0.97	8000	0.92	2770	65000	
A 80 4_1558	1558	1.8	8000	1.7	2000	65000	0.90	8000	0.85	2830	65000	

(—) Nehmen Sie bitte Kontakt mit unserem Applikationsdienst und Querkraftsdaten angeben (Drehrichtung, Orientierung, Anordnung)

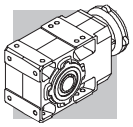

A 80 — 8000 Nm

	i	n_1 = 900 min^{-1}					n_1 = 500 min^{-1}					
		n_2 min^{-1}	M_{n2} Nm	P_{n1} kW	R_{n1} N	R_{n2} N	n_2 min^{-1}	M_{n2} Nm	P_{n1} kW	R_{n1} N	R_{n2} N	
A 80 3_9.8	9.8	92	4450	47	—	36700	51	5300	31	—	43800	302
A 80 3_10.7	10.7	84	4900	48	—	36900	47	5850	32	—	44000	
A 80 3_12.3	12.3	73	4900	41	—	38900	41	5850	27	—	46400	
A 80 3_13.3	13.3	68	4900	38	1360	40200	38	5850	25	1600	47900	
A 80 3_15.5	15.5	58	4650	31	2130	43000	32	5550	21	2530	51300	
A 80 3_16.7	16.7	54	5100	32	1840	43400	29.9	6100	21	2120	51700	
A 80 3_19.3	19.3	47	5000	27	2260	46000	25.9	6000	17.9	2530	54800	
A 80 3_20.9	20.9	43	5470	27	2030	46400	23.9	6500	17.9	2530	55400	
A 80 3_22.6	22.6	40	7100	33	6810	43900	22.1	8000	20.4	7000	53400	
A 80 3_24.5	24.5	37	7700	33	6800	44100	20.4	8000	18.8	7000	55300	
A 80 3_28.2	28.2	32	7550	28	6940	47000	17.7	8000	16.3	7000	58400	
A 80 3_30.6	30.6	29.4	7400	25	7000	49000	16.4	8000	15.1	7000	60400	
A 80 3_35.5	35.5	25.3	8000	23	6980	50600	14.1	8000	13.0	7000	63900	
A 80 3_38.5	38.5	23.4	8000	22	7000	52400	13.0	8000	12.0	7000	65000	
A 80 3_44.5	44.5	20.2	8000	18.6	7000	55400	11.2	8000	10.3	7000	65000	
A 80 3_48.2	48.2	18.7	8000	17.2	7000	57300	10.4	8000	9.6	7000	65000	
A 80 3_55.2	55.2	16.3	8000	15.0	7000	60300	9.1	8000	8.3	7000	65000	
A 80 3_59.8	59.8	15.1	8000	13.9	7000	62300	8.4	8000	7.7	7000	65000	
A 80 3_66.8	66.8	13.5	8000	12.4	7000	65000	7.5	8000	6.9	7000	65000	
A 80 3_72.4	72.4	12.4	8000	11.4	7000	65000	6.9	8000	6.4	7000	65000	
A 80 3_82.3	82.3	10.9	8000	10.1	7000	65000	6.1	8000	5.6	7000	65000	
A 80 3_89.2	89.2	10.1	8000	9.3	7000	65000	5.6	8000	5.2	7000	65000	
A 80 3_96.0	96.0	9.4	8000	8.6	7000	65000	5.2	8000	4.8	7000	65000	
A 80 3_104.0	104.0	8.7	8000	8.0	7000	65000	4.8	8000	4.4	7000	65000	
A 80 3_116.0	116.0	7.8	8000	7.1	7000	65000	4.3	8000	4.0	7000	65000	
A 80 3_125.6	125.6	7.2	8000	6.6	7000	65000	4.0	8000	3.7	7000	65000	
A 80 3_144.7	144.7	6.2	8000	5.7	7000	65000	3.5	8000	3.2	7000	65000	
A 80 3_156.8	156.8	5.7	8000	5.3	7000	65000	3.2	8000	2.9	7000	65000	
A 80 4_171.3	171.3	5.3	8000	4.9	2300	65000	2.9	8000	2.7	3500	65000	
A 80 4_214.7	214.7	4.2	8000	3.9	2470	65000	2.3	8000	2.2	3500	65000	
A 80 4_232.6	232.6	3.9	8000	3.6	2870	65000	2.1	8000	2.0	3500	65000	
A 80 4_277.3	277.3	3.2	8000	3.1	3000	65000	1.8	8000	1.7	3500	65000	
A 80 4_300.4	300.4	3.0	8000	2.8	3120	65000	1.7	8000	1.6	3500	65000	
A 80 4_354.0	354.0	2.5	8000	2.4	3100	65000	1.4	8000	1.3	3500	65000	
A 80 4_383.5	383.5	2.3	8000	2.2	3180	65000	1.3	8000	1.2	3500	65000	
A 80 4_442.1	442.1	2.0	8000	1.9	3160	65000	1.1	8000	1.1	3500	65000	
A 80 4_478.9	478.9	1.9	8000	1.8	3230	65000	1.0	8000	0.98	3500	65000	
A 80 4_560.5	560.5	1.6	8000	1.5	3210	65000	0.89	8000	0.84	3500	65000	
A 80 4_607.2	607.2	1.5	8000	1.4	3280	65000	0.82	8000	0.78	3500	65000	
A 80 4_703.5	703.5	1.3	8000	1.2	3260	65000	0.71	8000	0.67	3500	65000	
A 80 4_762.1	762.1	1.2	8000	1.1	3320	65000	0.66	8000	0.62	3500	65000	
A 80 4_829.5	829.5	1.1	8000	1.0	3280	65000	0.60	8000	0.57	3500	65000	
A 80 4_898.7	898.7	1.0	8000	0.94	3340	65000	0.56	8000	0.52	3500	65000	
A 80 4_1001	1001	0.90	8000	0.85	3300	65000	0.50	8000	0.47	3500	65000	
A 80 4_1085	1085	0.83	8000	0.78	3360	65000	0.46	8000	0.43	3500	65000	
A 80 4_1237	1237	0.73	8000	0.68	3310	65000	0.40	8000	0.38	3500	65000	
A 80 4_1340	1340	0.67	8000	0.63	3370	65000	0.37	8000	0.35	3500	65000	
A 80 4_1438	1438	0.63	8000	0.59	3330	65000	0.35	8000	0.33	3500	65000	
A 80 4_1558	1558	0.58	8000	0.54	3390	65000	0.32	8000	0.30	3500	65000	

(—) Nehmen Sie bitte Kontakt mit unserem Applikationsdienst und Querkraftsdaten angeben (Drehrichtung, Orientierung, Anordnung)

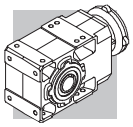

A 90 — 14000 Nm

	i	n_1 = 2800 min^{-1}					n_1 = 1400 min^{-1}					
		n_2 min^{-1}	M_{n2} Nm	P_{n1} kW	R_{n1} N	R_{n2} N	n_2 min^{-1}	M_{n2} Nm	P_{n1} kW	R_{n1} N	R_{n2} N	
A 90 3_9.7	9.7	289	7800	260	2440	27600	145	9050	151	5520	35000	
A 90 3_10.5	10.5	267	8350	257	2620	27700	134	9800	151	5530	34900	
A 90 3_12.6	12.6	221	8500	217	2700	29800	111	10450	133	4790	36700	
A 90 3_13.7	13.7	204	8050	189	4670	31800	102	11150	131	5060	36900	
A 90 3_15.6	15.6	180	8900	184	3240	32000	90	10950	113	5410	39400	
A 90 3_16.9	16.9	166	9650	184	3230	31900	83	11850	113	5440	39300	
A 90 3_19.4	19.4	144	9400	156	3160	34300	72	11550	96	5350	42300	
A 90 3_21.0	21.0	133	10150	156	3210	34300	67	12400	95	5510	42400	
A 90 3_22.3	22.3	126	9850	143	9660	35700	63	12150	88	12200	43900	
A 90 3_24.1	24.1	116	10700	143	9660	35500	58	13150	88	12200	43800	
A 90 3_29.1	29.1	96	10550	117	9800	38900	48	13000	72	12400	47900	
A 90 3_31.5	31.5	89	11450	117	9800	38800	44	14000	72	12400	47900	
A 90 3_35.8	35.8	78	11150	100	9910	41600	39	13750	62	12500	51100	
A 90 3_38.8	38.8	72	12100	100	9900	41500	36	14000	58	12700	52700	
A 90 3_44.6	44.6	63	11800	85	9920	44600	31	14000	51	12700	56000	
A 90 3_48.3	48.3	58	12800	85	9920	44500	29.0	14000	47	12800	58000	
A 90 3_55.0	55.0	51	12550	73	9960	47500	25.4	14000	41	12800	61400	
A 90 3_59.6	59.6	47	13550	73	9970	47500	23.5	14000	38	13000	63500	
A 90 3_68.8	68.8	41	13350	63	9960	50900	20.4	14000	33	13000	67400	
A 90 3_74.5	74.5	38	14000	61	10000	51700	18.8	14000	30	13100	69700	
A 90 3_80.4	80.4	35	13900	56	9920	53500	17.4	14000	28	13000	71900	
A 90 3_87.1	87.1	32	14000	52	10100	55500	16.1	14000	26	13200	74300	
A 90 3_98.6	98.6	28.4	14000	46	9990	58500	14.2	14000	23	13100	75000	
A 90 3_106.8	106.8	26.2	14000	42	10100	60600	13.1	14000	21	13300	75000	
A 90 3_116.9	116.9	24.0	14000	39	10100	63000	12.0	14000	19.3	13200	75000	
A 90 3_126.6	126.6	22.1	10650	27	10600	71400	11.1	13150	16.7	13400	75000	305
A 90 3_139.4	139.4	20.1	10350	24	10600	74500	10.0	12750	14.7	13400	75000	
A 90 3_151.0	151.0	18.5	11200	24	10600	75000	9.3	13800	14.7	13400	75000	
A 90 4_166.1	166.1	16.9	14000	28	—	75000	8.4	14000	13.9	—	75000	
A 90 4_180.0	180.0	15.6	14000	26	—	75000	7.8	14000	12.8	—	75000	
A 90 4_209.0	209.0	13.4	14000	22	—	75000	6.7	14000	11.0	—	75000	
A 90 4_226.4	226.4	12.4	14000	20	—	75000	6.2	14000	10.2	—	75000	
A 90 4_281.4	281.4	9.9	14000	16.4	—	75000	5.0	14000	8.2	—	75000	
A 90 4_304.9	304.9	9.2	14000	15.1	—	75000	4.6	14000	7.6	—	75000	
A 90 4_355.8	355.8	7.9	14000	13.0	—	75000	3.9	14000	6.5	—	75000	
A 90 4_385.4	385.4	7.3	14000	12.0	—	75000	3.6	14000	6.0	680	75000	
A 90 4_449.2	449.2	6.2	14000	10.3	—	75000	3.1	14000	5.1	—	75000	
A 90 4_486.6	486.6	5.8	14000	9.5	—	75000	2.9	14000	4.7	950	75000	
A 90 4_555.3	555.3	5.0	14000	8.3	—	75000	2.5	14000	4.2	740	75000	
A 90 4_601.6	601.6	4.7	14000	7.7	—	75000	2.3	14000	3.8	1200	75000	
A 90 4_707.9	707.9	4.0	14000	6.5	—	75000	2.0	14000	3.3	1050	75000	
A 90 4_766.9	766.9	3.7	14000	6.0	—	75000	1.8	14000	3.0	1490	75000	
A 90 4_865.1	865.1	3.2	14000	5.3	—	75000	1.6	14000	2.7	1170	75000	
A 90 4_937.2	937.2	3.0	14000	4.9	—	75000	1.5	14000	2.5	1590	75000	
A 90 4_1025	1025	2.7	14000	4.5	—	75000	1.4	14000	2.2	1330	75000	
A 90 4_1111	1111	2.5	14000	4.2	—	75000	1.3	14000	2.1	1740	75000	
A 90 4_1222	1222	2.3	14000	3.8	—	75000	1.1	14000	1.9	1380	75000	
A 90 4_1324	1324	2.1	14000	3.5	—	75000	1.1	14000	1.7	1790	75000	
A 90 4_1507	1507	1.9	14000	3.1	—	75000	0.93	14000	1.5	1440	75000	
A 90 4_1632	1632	1.7	14000	2.8	—	75000	0.86	14000	1.4	1840	75000	

(—) Nehmen Sie bitte Kontakt mit unserem Applikationsdienst und Querkraftsdaten angeben (Drehrichtung, Orientierung, Anordnung)

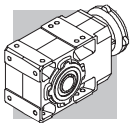

A 90 — 14000 Nm

	i	n_1 = 900 min^{-1}					n_1 = 500 min^{-1}					
		n_2 min^{-1}	M_{n2} Nm	P_{n1} kW	R_{n1} N	R_{n2} N	n_2 min^{-1}	M_{n2} Nm	P_{n1} kW	R_{n1} N	R_{n2} N	
A 90 3_9.7	9.7	93	9050	97	9800	42300	52	9050	54	15000	53700	
A 90 3_10.5	10.5	86	9800	97	9810	42500	48	9800	54	15000	54200	
A 90 3_12.6	12.6	71	11800	97	6720	42100	40	11800	54	13500	54500	
A 90 3_13.7	13.7	66	12750	96	6770	42100	37	12800	54	13500	54600	
A 90 3_15.6	15.6	58	11550	77	8730	46700	32	11550	43	15000	59900	
A 90 3_16.9	16.9	53	12500	77	8750	46800	29.6	12500	43	15000	60300	
A 90 3_19.4	19.4	46	11550	62	9630	51400	25.8	11550	34	15000	65400	
A 90 3_21.0	21.0	43	12400	61	9790	51700	23.8	12400	34	15000	66100	
A 90 3_22.3	22.3	40	13850	64	14200	50200	22.5	14000	36	15000	64700	
A 90 3_24.1	24.1	37	14000	60	14400	51900	20.7	14000	33	15000	66900	
A 90 3_29.1	29.1	31	14000	50	14600	56200	17.2	14000	28	15000	72100	
A 90 3_31.5	31.5	28.6	14000	46	14800	58400	15.9	14000	26	15000	74700	
A 90 3_35.8	35.8	25.1	14000	40	14900	61700	14.0	14000	23	15000	75000	
A 90 3_38.8	38.8	23.2	14000	37	15000	63900	12.9	14000	21	15000	75000	
A 90 3_44.6	44.6	20.2	14000	33	15000	67700	11.2	14000	18.1	15000	75000	
A 90 3_48.3	48.3	18.6	14000	30	15000	70000	10.4	14000	16.7	15000	75000	
A 90 3_55.0	55.0	16.4	14000	26	15000	73800	9.1	14000	14.6	15000	75000	
A 90 3_59.6	59.6	15.1	14000	24	15000	75000	8.4	14000	13.5	15000	75000	
A 90 3_68.8	68.8	13.1	14000	21	15000	75000	7.3	14000	11.7	15000	75000	
A 90 3_74.5	74.5	12.1	14000	19.5	15000	75000	6.7	14000	10.8	15000	75000	
A 90 3_80.4	80.4	11.2	14000	18.0	15000	75000	6.2	14000	10.0	15000	75000	
A 90 3_87.1	87.1	10.3	14000	16.7	15000	75000	5.7	14000	9.3	15000	75000	
A 90 3_98.6	98.6	9.1	14000	14.7	15000	75000	5.1	14000	8.2	15000	75000	
A 90 3_106.8	106.8	8.4	14000	13.6	15000	75000	4.7	14000	7.5	15000	75000	
A 90 3_116.9	116.9	7.7	14000	12.4	15000	75000	4.3	14000	6.9	15000	75000	
A 90 3_126.6	126.6	7.1	14000	11.4	15000	75000	3.9	14000	6.4	15000	75000	305
A 90 3_139.4	139.4	6.5	14000	10.4	15000	75000	3.6	14000	5.8	15000	75000	
A 90 3_151.0	151.0	6.0	14000	9.6	15000	75000	3.3	14000	5.3	15000	75000	
A 90 4_166.1	166.1	5.4	14000	8.9	—	75000	3.0	14000	5.0	700	75000	
A 90 4_180.0	180.0	5.0	14000	8.2	—	75000	2.8	14000	4.6	1400	75000	
A 90 4_209.0	209.0	4.3	14000	7.1	—	75000	2.4	14000	3.9	1500	75000	
A 90 4_226.4	226.4	4.0	14000	6.5	500	75000	2.2	14000	3.6	2100	75000	
A 90 4_281.4	281.4	3.2	14000	5.3	690	75000	1.8	14000	2.9	2300	75000	
A 90 4_304.9	304.9	3.0	14000	4.9	1230	75000	1.6	14000	2.7	2900	75000	
A 90 4_355.8	355.8	2.5	14000	4.2	1240	75000	1.4	14000	2.3	2900	75000	
A 90 4_385.4	385.4	2.3	14000	3.8	1750	75000	1.3	14000	2.1	3400	75000	
A 90 4_449.2	449.2	2.0	14000	3.3	1540	75000	1.1	14000	1.8	3200	75000	
A 90 4_486.6	486.6	1.8	14000	3.0	2020	75000	1.0	14000	1.7	3500	75000	
A 90 4_555.3	555.3	1.6	14000	2.7	1810	75000	0.90	14000	1.5	3500	75000	
A 90 4_601.6	601.6	1.5	14000	2.5	2270	75000	0.83	14000	1.4	3500	75000	
A 90 4_707.9	707.9	1.3	14000	2.1	2120	75000	0.71	14000	1.2	3500	75000	
A 90 4_766.9	766.9	1.2	14000	1.9	2560	75000	0.65	14000	1.1	3500	75000	
A 90 4_865.1	865.1	1.0	14000	1.7	2240	75000	0.58	14000	0.95	3500	75000	
A 90 4_937.2	937.2	0.96	14000	1.6	2660	75000	0.53	14000	0.88	3500	75000	
A 90 4_1025	1025	0.88	14000	1.4	2400	75000	0.49	14000	0.80	3500	75000	
A 90 4_1111	1111	0.81	14000	1.3	2810	75000	0.45	14000	0.74	3500	75000	
A 90 4_1222	1222	0.74	14000	1.2	2450	75000	0.41	14000	0.67	3500	75000	
A 90 4_1324	1324	0.68	14000	1.1	2860	75000	0.38	14000	0.62	3500	75000	
A 90 4_1507	1507	0.60	14000	0.98	2410	75000	0.33	14000	0.55	3500	75000	
A 90 4_1632	1632	0.55	14000	0.91	2910	75000	0.31	14000	0.50	3500	75000	

(—) Nehmen Sie bitte Kontakt mit unserem Applikationsdienst und Querkraftsdaten angeben (Drehrichtung, Orientierung, Anordnung)

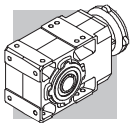

41 ANBAUMÖGLICHKEITEN

In den Tabellen (C39) und (C40) werden die von den Größen her gesehenen Anbaumöglichkeiten angegeben.

Die angemessene Getriebewahl muss unter Befolgung der im Paragraph 11 gegebenen Anleitungen und auf der Grundlage der Auswahltabelle der technischen Daten erfolgen.

(C 39)

		IEC_ BN BE BX (IM B5)																				
		BN		BN	BE	BN	BE	BN	BE	BN	BE	BN	BE	BX	BN	BE	BX	BN	BE	BX	BN	IEC	IEC
P_{n1}(#) [kW]	2p	0.37	0.75	1.5	1.1	2.2	2.2	4	3	4	4	9.2	9.2	—	18.5	18.5	—	22	—	—	30	45	55
	4p	0.25	0.55	1.1	0.75	1.85	1.5	3	3	4	4	9.2	9.2	7.5	15	15	15	22	22	22	30	47	55
	6p	0.12	0.37	0.75	—	1.1	0.75	1.85	1.5	2.2	2.2	5.5	4	—	11	7.5	—	15	—	—	18.5	30	37
		P63	P71	P80		P90		P100		P112		P132			P160			P180			P200	P225	P250
A 05 2		5.5_91.6	5.5_51.3	5.5_51.3																			
A 10 2		5.5_91.6	5.5_91.6	5.5_65.9		5.5_65.9		5.5_65.9		5.5_65.9													
A 20 2		7.3_92.3 ⊖ (10.3)	7.3_92.3 ⊖ (10.3)	5.4_79.9		5.4_79.9		5.4_79.9		5.4_79.9													
A 20 3		109.2_380.9	109.2_380.9	109.2_380.9		109.2_380.9		109.2_380.9		109.2_380.9													
A 30 2		9.3_97.5 ⊖ (10.5 ; 13.6_16.3)	9.3_97.5 ⊖ (10.5 ; 13.6_16.3)	5.4_97.5		5.4_97.5		5.4_97.5		5.4_97.5													
A 30 3		109.1_400.8	109.1_400.8	109.1_400.8		109.1_400.8		109.1_400.8		109.1_400.8													
A 35 2		9.3_95.6 ⊖ (13.1_20.4)	9.3_95.6 ⊖ (13.1_20.4)	5.4_95.6		5.4_95.6		5.4_95.6		5.4_95.6		5.4_11.8											
A 35 3		105.5_393.2	105.5_393.2	105.5_393.2		105.5_393.2		105.5_393.2		105.5_393.2													
A 41 2		11.7_79.2 ⊖ (13.8_17.8)	11.7_79.2 ⊖ (13.8_17.8)	5.2_79.2		5.2_79.2		5.2_79.2		5.2_79.2		5.2_45.1											
A 41 3		92.8_376.8	92.8_376.8	92.8_376.8		92.8_376.8		92.8_376.8		92.8_376.8													
A 50 2		20.9	20.9	7.7_20.9		7.7_20.9		7.7_20.9		7.7_20.9		7.7_20.9			7.7_20.9			7.7_20.9					
A 50 3		51.7_190.6	51.7_190.6	24.0_190.6		24.0_190.6		24.0_190.6		24.0_190.6		24.0_109.4			24.0_109.4			24.0_109.4					
A 50 4	i =	211.0_778.2	211.0_778.2	211.0_778.2		211.0_778.2		211.0_778.2		211.0_778.2													
A 55 2				13.1_19.2		13.1_19.2		13.1_19.2		13.1_19.2		4.9_19.2			4.9_19.2			4.9_19.2					
A 55 3		64.3_194.2	64.3_194.2	23.8_194.2		23.8_194.2		23.8_194.2		23.8_194.2		23.8_123.9			23.8_123.9			23.8_123.9					
A 55 4		208.1_793.0	208.1_793.0	208.1_793.0		208.1_793.0		208.1_793.0		208.1_793.0													
A 60 2				10.3_20.6		10.3_20.6		10.3_20.6		10.3_20.6		7.9_20.6			7.9_20.6			7.9_20.6					
A 60 3		65.0_185.8	65.0_185.8	25.7_185.8		25.7_185.8		25.7_185.8		25.7_185.8		25.7_133.3			25.7_133.3			25.7_133.3					
A 60 4		208.7_755.4	208.7_755.4	208.7_755.4		208.7_755.4		208.7_755.4		208.7_755.4													
A 70 3				66.9_153.7		66.9_153.7		66.9_153.7		66.9_153.7		15.4_153.7 ⊖ (23.5_30.1)			9.4_153.7			9.4_153.7			9.4_38.4 ⊖ (19.7_21.3)		
A 70 4		292.0_1715	292.0_1715	169.8_1715		169.8_1715		169.8_1715		169.8_1715		169.8_644.6											
A 80 3				82.3_156.8		82.3_156.8		82.3_156.8		82.3_156.8		19.3_156.8 ⊖ (22.6_38.5)			12.3_156.8 ⊖ (22.6_24.5)			9.8_156.8			9.8_104.0	9.8_104.0	
A 80 4		354.0_1558	354.0_1558	171.3_1558		171.3_1558		171.3_1558		171.3_1558		171.3_762.1											
A 90 3				98.6_151.0		98.6_151.0		98.6_151.0		98.6_151.0		55.0_151.0			19.4_151.0 ⊖ (22.3_38.8)			9.7_151.0			9.7_126.6	9.7_126.6	9.7_126.6
A 90 4		449.2_1632	449.2_1632	166.1_1632		166.1_1632		166.1_1632		166.1_1632		166.1_937.2			166.1_937.2			166.1_937.2					

(#) P_{n1} = max. installierbare Leistung für IEC Motoradapter P_

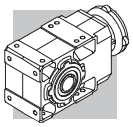

(C 40)

		M	ME	MX			
		M05	**M1**	**M2 - ME2**	**ME3**	**ME4 - MX4**	**ME5 - MX5**
A 05 2		5.5_91.6	5.5_51.3	5.5_65.9			
A 10 2		5.5_91.6	5.5_51.3	5.5_65.9	5.5_65.9		
A 20 2		7.3_92.3 ⊖ (10.3)	7.3_63.1 ⊖ (10.3)	5.4_79.9	5.4_79.9		
A 20 3		109.2_380.9	109.2_380.9	109.2_380.9	109.2_380.9		
A 30 2			9.3_76.5 ⊖ (10.5 ; 13.6_16.3)	5.4_97.5	5.4_97.5		
A 30 3		109.1_400.8	109.1_400.8	109.1_400.8	109.1_400.8		
A 35 2			9.3_95.6 ⊖ (13.1_20.4)	5.4_95.6	5.4_95.6	5.4_11.8	
A 35 3		105.5_393.2	105.5_393.2	105.5_393.2	105.5_393.2		
A 41 2			11.7_79.2 ⊖ (13.8_17.8)	5.2_79.2	5.2_79.2	5.2_45.1	
A 41 3		92.8_376.8	92.8_376.8	92.8_376.8	92.8_376.8		
A 50 2			20.9	7.7_20.9	7.7_20.9	7.7_20.9	7.7_20.9
A 50 3			51.7_190.6	24.0_190.6	24.0_190.6	24.0_109.4	24.0_109.4
A 50 4	**i =**		211.0_778.2	211.0_778.2	211.0_778.2		
A 55 2				13.1_19.2	13.1_19.2	4.9_19.2	4.9_19.2
A 55 3			64.3_194.2	23.8_194.2	23.8_194.2	23.8_123.9	23.8_123.9
A 55 4			208.1_793.0	208.1_793.0	208.1_793.0		
A 60 2				10.3_20.6	10.3_20.6	7.9_20.6	7.9_20.6
A 60 3				25.7_185.8	25.7_185.8	25.7_133.3	25.7_133.3
A 60 4			208.7_755.4	208.7_755.4	208.7_755.4		
A 70 3				66.9_153.7	66.9_153.7	15.4_153.7 ⊖ (23.5_30.1)	15.4_153.7 ⊖ (23.5_30.1)
A 70 4			292.0_1715	169.8_1715	169.8_1715	169.8_644.6	
A 80 3					82.3_156.8	19.3_156.8 ⊖ (22.6_38.5)	19.3_156.8 ⊖ (22.6_38.5)
A 80 4			354.0_1558	171.3_1558	171.3_1558	171.3_762.1	
A 90 3					98.6_151.0	55.0_151.0	55.0_151.0
A 90 4			449.2_1632	166.1_1632	166.1_1632	166.1_937.2	

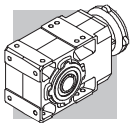

Für viele Servomotoren der wichtigsten Hersteller stehen passende Motoradapter für die Baugrößen A05…A60 zur Verfügung. Die Abmessungen der Servomotor-Eingänge entnehmen Sie bitte dem Zeichnungsteil der verschiedenen Baugrößen. Der Bezeichnungszusatz **SK** steht für Eingänge mit herkömmlicher Passfedernut. Der Zusatz **SC** bezieht sich stattdessen auf Eingänge mit Klemmvorrichtung

(C 41)

		SERVO INPUT					
		SK40A	SK60A	SK60B	SK80A	SK80B	SK80C
		SC40A	SC60A	SC60B	SC80A	SC80B	SC80C
A 05 2	i =	5.5_91.6	5.5_91.6	5.5_51.3	5.5_51.3		
A 10 2			5.5_91.6	5.5_51.3	5.5_51.3		5.5_65.9
A 20 2			7.3_92.3 ⊖ (10.3)	7.3_63.1 ⊖ (10.3)	7.3_63.1 ⊖ (10.3)		5.4_79.9
A 20 3			109.2_380.9	109.2_380.9	109.2_380.9		109.2_380.9
A 30 2			9.3_97.5 ⊖ (10.5 ; 13.6_16.3)	9.3_76.5 ⊖ (10.5 ; 13.6_16.3)	9.3_76.5 ⊖ (10.5 ; 13.6_16.3)		5.4_97.5
A 30 3			109.1_400.8	109.1_400.8	109.1_400.8		109.1_400.8
A 35 2			9.3_95.6 ⊖ (13.1_20.4)	9.3_95.6 ⊖ (13.1_20.4)	9.3_95.6 ⊖ (13.1_20.4)		5.4_95.6
A 35 3			105.5_393.2	105.5_393.2	105.5_393.2		105.5_393.2
A 41 2						11.7_79.2 ⊖ (13.8_17.8)	5.2_79.2
A 41 3			92.8_376.8	92.8_376.8	92.8_376.8		92.8_376.8
A 50 2						20.9	7.7_20.9
A 50 3						51.7_190.6	24.0_190.6
A 50 4							211.0_778.2
A 55 2							13.1_19.2
A 55 3						64.3_194.2	23.8_194.2
A 55 4							208.1_793.0
A 60 2							10.3_20.6
A 60 3							25.7_185.8
A 60 4						208.7_755.4	208.7_755.4

(C 42)

		SERVO INPUT								
		SK95A	SK95B	SK95C	SK110A	SK110B	SK130A	SK130B	SK180A	SK180B
		SC95A	SC95B	SC95C	SC110A	SC110B	SC130A	SC130B	SC180A	SC180B
A 10 2	i =	5.5_51.3	5.5_65.9	5.5_65.9	5.5_65.9	5.5_65.9				
A 20 2		7.3_63.1 ⊖ (10.3)	5.4_79.9	5.4_79.9	5.4_79.9	5.4_79.9				
A 20 3		109.2_380.9	109.2_380.9	109.2_380.9	109.2_380.9	109.2_380.9				
A 30 2		9.3_76.5 ⊖ (10.5 ; 13.6_16.3)	5.4_97.5	5.4_97.5	5.4_97.5	5.4_97.5	5.4_97.5			
A 30 3		109.1_400.8	109.1_400.8	109.1_400.8	109.1_400.8	109.1_400.8				
A 35 2		9.3_95.6 ⊖ (13.1_20.4)	5.4_95.6	5.4_95.6	5.4_95.6	5.4_95.6	5.4_95.6			
A 35 3		105.5_393.2	105.5_393.2	105.5_393.2	105.5_393.2	105.5_393.2				
A 41 2		11.7_79.2 ⊖ (13.8_17.8)	5.2_79.2	5.2_79.2	5.2_79.2	5.2_79.2	5.2_79.2	5.2_45.1	5.2_45.1	5.2_45.1
A 41 3		92.8_376.8	92.8_376.8	92.8_376.8	92.8_376.8	92.8_376.8				
A 50 2		20.9	7.7_20.9	7.7_20.9	7.7_20.9	7.7_20.9	7.7_20.9	7.7_20.9	7.7_20.9	7.7_20.9
A 50 3		51.7_190.6	24.0_190.6	24.0_190.6	24.0_190.6	24.0_190.6	24.0_190.6	24.0_109.4	24.0_109.4	24.0_109.4
A 50 4		211.0_778.2	211.0_778.2	211.0_778.2	211.0_778.2	211.0_778.2	211.0_778.2			
A 55 2			13.1_19.2	13.1_19.2	13.1_19.2	13.1_19.2	13.1_19.2	4.9_19.2	4.9_19.2	4.9_19.2
A 55 3		64.3_194.2	23.8_194.2	23.8_194.2	23.8_194.2	23.8_194.2	23.8_194.2	23.8_123.9	23.8_123.9	23.8_123.9
A 55 4		208.1_793.0	208.1_793.0	208.1_793.0	208.1_793.0	208.1_793.0	208.1_793.0			
A 60 2			10.3_20.6	10.3_20.6	10.3_20.6	10.3_20.6	10.3_20.6	7.9_20.6	7.9_20.6	7.9_20.6
A 60 3		65.0_185.8	25.7_185.8	25.7_185.8	25.7_185.8	25.7_185.8	25.7_185.8	25.7_133.3	25.7_133.3	25.7_133.3
A 60 4		208.7_755.4	208.7_755.4	208.7_755.4	208.7_755.4	208.7_755.4	208.7_755.4			

Die in den folgenden Tabellen angegebenen Trägheitsmomente J_r [kgm²] beziehen sich auf die Getriebeantriebsachse. Um das Lesen der Tabellen zu erleichtern, werden folgende Symbole verwendet:

Daten beziehen sich auf Kompaktgetriebe ohne Motor. Um das Gesamtträgheitsmoment des Getriebemotors zu ermitteln, muss nur das Trägheitsmoment des Getriebes mit dem Trägheitsmoment des entsprechenden Motors addiert werden (Wert Elektromotorenauswahltabellen entnehmen).

IEC — Nur Getriebe vorbereitet für IEC-Motor (IEC-Größe...).

Dieses Symbol bezieht sich auf Getriebewerte.

SERVO — Nur Getriebe vorbereitet für Servomotor.

A 05

	i	J (•10-4) [kgm2]				
			IEC 63	IEC 71	IEC 80	
A 05 2_5.5	5.5	0.72	0.99	1.0	1.4	—
A 05 2_6.3	6.3	0.56	0.83	0.86	1.2	—
A 05 2_7.2	7.2	0.48	0.74	0.77	1.1	—
A 05 2_8.5	8.5	0.36	0.63	0.65	1.0	—
A 05 2_9.6	9.6	0.29	0.55	0.58	0.92	—
A 05 2_10.6	10.6	0.50	0.77	0.80	1.1	—
A 05 2_12.3	12.3	0.18	0.45	0.48	0.82	—
A 05 2_13.9	13.9	0.35	0.62	0.65	0.99	—
A 05 2_16.4	16.4	0.27	0.54	0.57	0.91	—
A 05 2_18.6	18.6	0.22	0.49	0.51	0.86	—
A 05 2_21.4	21.4	0.16	0.43	0.46	0.80	—
A 05 2_23.8	23.8	0.14	0.41	0.43	0.78	—
A 05 2_25.5	25.5	0.13	0.39	0.42	0.76	—
A 05 2_28.6	28.6	0.11	0.38	0.40	0.75	—
A 05 2_32.2	32.2	0.09	0.36	0.39	0.73	—
A 05 2_35.1	35.1	0.08	0.35	0.37	0.72	—
A 05 2_40.9	40.9	0.07	0.33	0.36	0.70	—
A 05 2_45.4	45.4	0.05	0.32	0.35	0.69	—
A 05 2_51.3	51.3	0.04	0.31	0.34	0.68	—
A 05 2_58.6	58.6	0.04	0.31	—	—	—
A 05 2_65.9	65.9	0.03	0.30	—	—	—
A 05 2_76.4	76.4	0.02	0.29	—	—	—
A 05 2_91.6	91.6	0.02	0.28	—	—	—

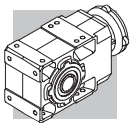

A 05

	i	J (•10-4) [kgm2]					
		SERVO					
		40A		60A		60B 80A	
		SK	SC	SK	SC	SK	SC
A 05 2_5.5	5.5	0.89	1.1	0.99	1.3	1.0	1.4
A 05 2_6.3	6.3	0.73	0.89	0.83	1.1	0.86	1.3
A 05 2_7.2	7.2	0.65	0.81	0.74	1.0	0.77	1.2
A 05 2_8.5	8.5	0.53	0.69	0.63	0.89	0.65	1.1
A 05 2_9.6	9.6	0.46	0.62	0.55	0.81	0.58	1.0
A 05 2_10.6	10.6	0.67	0.83	0.77	1.0	0.80	1.2
A 05 2_12.3	12.3	0.35	0.51	0.45	0.71	0.48	0.92
A 05 2_13.9	13.9	0.52	0.68	0.62	0.88	0.65	1.1
A 05 2_16.4	16.4	0.44	0.60	0.54	0.80	0.57	1.0
A 05 2_18.6	18.6	0.39	0.55	0.49	0.75	0.51	0.95
A 05 2_21.4	21.4	0.33	0.49	0.43	0.69	0.46	0.90
A 05 2_23.8	23.8	0.31	0.47	0.41	0.67	0.43	0.87
A 05 2_25.5	25.5	0.30	0.46	0.39	0.65	0.42	0.86
A 05 2_28.6	28.6	0.28	0.44	0.38	0.64	0.40	0.84
A 05 2_32.2	32.2	0.26	0.42	0.36	0.62	0.39	0.83
A 05 2_35.1	35.1	0.25	0.41	0.35	0.61	0.37	0.81
A 05 2_40.9	40.9	0.24	0.40	0.33	0.59	0.36	0.80
A 05 2_45.4	45.4	0.22	0.38	0.32	0.58	0.35	0.79
A 05 2_51.3	51.3	0.21	0.37	0.31	0.57	0.34	0.78
A 05 2_58.6	58.6	0.21	0.37	0.31	0.57	—	—
A 05 2_65.9	65.9	0.20	0.36	0.30	0.56	—	—
A 05 2_76.4	76.4	0.19	0.35	0.29	0.55	—	—
A 05 2_91.6	91.6	0.19	0.35	0.28	0.54	—	—

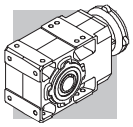

A 10

	i	J (•10-4) [kgm2]							
			IEC						
			63	71	80	90	100	112	
A 10 2_5.5	5.5	1.0	2.5	2.5	3.9	3.8	5.1	5.1	1.8
A 10 2_6.3	6.3	0.80	2.3	2.3	3.7	3.6	4.9	4.9	1.6
A 10 2_7.2	7.2	0.60	2.1	2.1	3.5	3.4	4.7	4.7	1.5
A 10 2_8.5	8.5	0.45	1.9	1.9	3.3	3.1	4.5	4.5	1.4
A 10 2_9.6	9.6	0.30	1.8	1.8	3.2	3.1	4.4	4.4	1.3
A 10 2_10.6	10.6	0.50	2.0	2.0	3.4	3.3	4.6	4.6	1.4
A 10 2_12.3	12.3	0.20	1.7	1.7	3.1	3.0	4.3	4.3	1.1
A 10 2_13.9	13.9	0.30	1.8	1.8	3.2	3.1	4.6	4.6	1.2
A 10 2_16.4	16.4	0.25	1.7	1.7	3.1	3.0	4.3	4.3	1.1
A 10 2_18.6	18.6	0.20	1.7	1.7	3.1	3.0	4.3	4.3	1.0
A 10 2_21.4	21.4	0.15	1.6	1.6	3.0	2.9	4.2	4.2	1.0
A 10 2_23.8	23.8	0.10	1.6	1.6	3.0	2.9	4.2	4.2	1.0
A 10 2_25.5	25.5	0.10	1.6	1.6	3.0	2.9	4.2	4.2	1.0
A 10 2_28.6	28.6	0.10	1.6	1.6	3.0	2.9	4.2	4.2	0.90
A 10 2_32.2	32.2	0.08	1.6	1.6	3.0	2.9	4.2	4.2	0.90
A 10 2_35.1	35.1	0.07	1.6	1.6	3.0	2.9	4.2	4.2	0.90
A 10 2_40.9	40.9	0.06	1.6	1.6	3.0	2.9	4.2	4.2	0.90
A 10 2_45.4	45.4	0.05	1.6	1.6	3.0	2.9	4.2	4.2	0.90
A 10 2_51.3	51.3	0.03	1.5	1.5	2.9	2.8	4.1	4.1	0.90
A 10 2_58.6	58.6	0.03	1.5	1.5	2.9	2.8	4.1	4.1	0.90
A 10 2_65.9	65.9	0.02	1.5	1.5	2.9	2.8	4.1	4.1	0.90
A 10 2_76.4	76.4	0.02	1.5	1.5	—	—	—	—	0.90
A 10 2_91.6	91.6	0.01	1.5	1.5	—	—	—	—	0.90

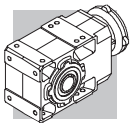

A 10

	i	J (•10-4) [kgm2]									
		SERVO									
		60A		60B 80A		95A		80C 95B 110A		95C 110B	
		SK	SC	SK	SC	SK	SC	SK	SC	SK	SC
A 10 2_5.5	5.5	1.3	1.5	1.3	1.7	3.8	4.3	3.9	4.4	3.8	4.8
A 10 2_6.3	6.3	1.1	1.3	1.1	1.5	3.6	4.1	3.7	4.2	3.6	4.6
A 10 2_7.2	7.2	0.87	1.1	0.89	1.3	3.4	3.9	3.5	4.0	3.4	4.4
A 10 2_8.5	8.5	0.72	0.98	0.74	1.2	3.3	3.7	3.3	3.8	3.1	4.1
A 10 2_9.6	9.6	0.57	0.83	0.59	1.0	3.1	3.6	3.2	3.7	3.1	4.1
A 10 2_10.6	10.6	0.77	1.0	0.79	1.2	3.3	3.8	3.4	3.9	3.3	4.3
A 10 2_12.3	12.3	0.47	0.73	0.49	0.93	3.0	3.5	3.1	3.6	3.0	4.0
A 10 2_13.9	13.9	0.57	0.83	0.59	1.0	3.1	3.6	3.2	3.7	3.1	4.1
A 10 2_16.4	16.4	0.52	0.78	0.54	0.98	3.1	3.5	3.1	3.6	3.0	4.0
A 10 2_18.6	18.6	0.47	0.73	0.49	0.93	3.0	3.5	3.1	3.6	3.0	4.0
A 10 2_21.4	21.4	0.42	0.68	0.44	0.88	3.0	3.4	3.0	3.5	2.9	3.9
A 10 2_23.8	23.8	0.37	0.63	0.39	0.83	2.9	3.4	3.0	3.5	2.9	3.9
A 10 2_25.5	25.5	0.37	0.63	0.39	0.83	2.9	3.4	3.0	3.5	2.9	3.9
A 10 2_28.6	28.6	0.37	0.63	0.39	0.83	2.9	3.4	3.0	3.5	2.9	3.9
A 10 2_32.2	32.2	0.35	0.61	0.37	0.81	2.9	3.3	3.0	3.5	2.9	3.9
A 10 2_35.1	35.1	0.34	0.60	0.36	0.80	2.9	3.3	3.0	3.5	2.9	3.9
A 10 2_40.9	40.9	0.33	0.59	0.35	0.79	2.9	3.3	3.0	3.5	2.9	3.9
A 10 2_45.4	45.4	0.32	0.58	0.34	0.78	2.9	3.3	3.0	3.5	2.9	3.9
A 10 2_51.3	51.3	0.30	0.56	0.32	0.76	2.9	3.3	2.9	3.4	2.8	3.8
A 10 2_58.6	58.6	0.30	0.56	—	—	—	—	2.9	3.4	2.8	3.8
A 10 2_65.9	65.9	0.29	0.55	—	—	—	—	2.9	3.4	2.8	3.8
A 10 2_76.4	76.4	0.29	0.55	—	—	—	—	—	—	—	—
A 10 2_91.6	91.6	0.28	0.54	—	—	—	—	—	—	—	—

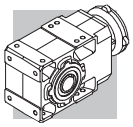

A 20

	i	J (•10-4) [kgm2]							
			IEC						
			63	71	80	90	100	112	
A 20 2_5.4	5.4	2.4	—	—	5.3	5.2	6.5	6.5	4.3
A 20 2_6.5	6.5	1.9	—	—	4.8	4.7	6.0	6.0	3.8
A 20 2_7.3	7.3	1.4	2.9	2.9	4.3	4.2	5.5	5.5	3.3
A 20 2_8.4	8.4	1.1	2.6	2.6	4.0	3.9	5.2	5.2	3.0
A 20 2_9.4	9.4	0.90	2.4	2.4	3.8	3.7	5.0	5.0	2.8
A 20 2_10.3	10.3	1.2	—	—	4.1	4.0	5.3	5.3	3.0
A 20 2_12.0	12.0	0.50	2.0	2.0	3.4	3.3	4.6	4.6	2.4
A 20 2_14.1	14.1	0.70	2.2	2.2	3.6	3.5	4.8	4.8	2.6
A 20 2_16.2	16.2	0.55	2.0	2.0	3.4	3.3	4.6	4.6	2.5
A 20 2_18.1	18.1	0.40	1.9	1.9	3.3	3.2	4.5	4.5	2.4
A 20 2_21.2	21.2	0.35	1.8	1.8	3.2	3.1	4.4	4.4	2.3
A 20 2_23.1	23.1	0.30	1.8	1.8	3.2	3.1	4.4	4.4	2.2
A 20 2_26.5	26.5	0.25	1.7	1.7	3.1	3.0	4.3	4.3	2.1
A 20 2_29.2	29.2	0.20	1.7	1.7	3.1	3.0	4.3	4.3	2.1
A 20 2_31.3	31.3	0.20	1.7	1.7	3.1	3.0	4.3	4.3	2.1
A 20 2_35.4	35.4	0.20	1.7	1.7	3.1	3.0	4.3	4.3	2.1
A 20 2_39.6	39.6	0.10	1.6	1.6	3.0	2.9	4.2	4.2	2.0
A 20 2_43.2	43.2	0.10	1.6	1.6	3.0	2.9	4.2	4.2	2.0
A 20 2_48.3	48.3	0.10	1.6	1.6	3.0	2.9	4.2	4.2	2.0
A 20 2_53.7	53.7	0.10	1.6	1.6	3.0	2.9	4.2	4.2	2.0
A 20 2_63.1	63.1	0.10	1.6	1.6	3.0	2.9	4.2	4.2	2.0
A 20 2_71.0	71.0	0.05	1.5	1.5	2.9	2.8	4.1	4.1	2.0
A 20 2_79.9	79.9	0.03	1.5	1.5	2.9	2.8	4.1	4.1	2.0
A 20 2_92.3	92.3	0.02	1.5	1.5	—	—	—	—	2.0
A 20 3_109.2	109.2	0.02	1.5	1.5	2.9	2.8	4.1	4.1	0.90
A 20 3_120.5	120.5	0.02	1.5	1.5	2.9	2.8	4.1	4.1	0.90
A 20 3_129.1	129.1	0.02	1.5	1.5	2.9	2.8	4.1	4.1	0.90
A 20 3_146.1	146.1	0.02	1.5	1.5	2.9	2.8	4.1	4.1	0.90
A 20 3_163.4	163.4	0.01	1.5	1.5	2.9	2.8	4.1	4.1	0.90
A 20 3_178.3	178.3	0.01	1.5	1.5	2.9	2.8	4.1	4.1	0.90
A 20 3_199.2	199.2	0.01	1.5	1.5	2.9	2.8	4.1	4.1	0.90
A 20 3_221.3	221.3	0.01	1.5	1.5	2.9	2.8	4.1	4.1	0.90
A 20 3_260.5	260.5	0.01	1.5	1.5	2.9	2.8	4.1	4.1	0.90
A 20 3_292.8	292.8	0.01	1.5	1.5	2.9	2.8	4.1	4.1	0.90
A 20 3_329.4	329.4	0.01	1.5	1.5	2.9	2.8	4.1	4.1	0.90
A 20 3_380.9	380.9	0.01	1.5	1.5	2.9	2.8	4.1	4.1	0.90

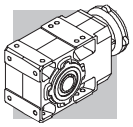

A 20

	i	J (•10-4) [kgm2]									
		SERVO									
		60A		60B 80A		95A		80C 95B 110A		95C 110B	
		SK	SC	SK	SC	SK	SC	SK	SC	SK	SC
A 20 2_5.4	5.4	—	—	—	—	—	—	5.3	5.8	5.2	6.2
A 20 2_6.5	6.5	—	—	—	—	—	—	4.8	5.3	4.7	5.7
A 20 2_7.3	7.3	1.7	1.9	1.7	2.1	4.2	4.7	4.3	4.8	4.2	5.2
A 20 2_8.4	8.4	1.4	1.6	1.4	1.8	3.9	4.6	4.0	4.5	3.9	4.9
A 20 2_9.4	9.4	1.2	1.4	1.2	1.6	3.7	4.2	3.8	4.3	3.7	4.7
A 20 2_10.3	10.3	—	—	—	—	—	—	4.1	4.6	4.0	5.0
A 20 2_12.0	12.0	0.77	1.0	0.79	1.2	3.3	3.8	3.4	3.9	3.3	4.3
A 20 2_14.1	14.1	0.97	1.2	0.99	1.4	3.5	4.0	3.6	4.1	3.5	4.5
A 20 2_16.2	16.2	0.82	1.1	0.84	1.3	3.4	3.8	3.4	3.9	3.3	4.3
A 20 2_18.1	18.1	0.67	0.93	0.69	1.1	3.2	3.7	3.3	3.8	3.2	4.2
A 20 2_21.2	21.2	0.62	0.88	0.64	1.1	3.2	3.6	3.2	3.7	3.1	4.1
A 20 2_23.1	23.1	0.57	0.83	0.59	1.0	3.1	3.6	3.2	3.7	3.1	4.1
A 20 2_26.5	26.5	0.52	0.78	0.54	0.98	3.1	3.5	3.1	3.6	3.0	4.0
A 20 2_29.2	29.2	0.47	0.73	0.49	0.93	3.0	3.5	3.1	3.6	3.0	4.0
A 20 2_31.3	31.3	0.47	0.73	0.49	0.93	3.0	3.5	3.1	3.6	3.0	4.0
A 20 2_35.4	35.4	0.47	0.73	0.49	0.93	3.0	3.5	3.1	3.6	3.0	4.0
A 20 2_39.6	39.6	0.37	0.63	0.39	0.83	2.9	3.4	3.0	3.5	2.9	3.9
A 20 2_43.2	43.2	0.37	0.63	0.39	0.83	2.9	3.4	3.0	3.5	2.9	3.9
A 20 2_48.3	48.3	0.37	0.63	0.39	0.83	2.9	3.4	3.0	3.5	2.9	3.9
A 20 2_53.7	53.7	0.37	0.63	0.39	0.83	2.9	3.4	3.0	3.5	2.9	3.9
A 20 2_63.1	63.1	0.37	0.63	0.39	0.83	2.9	3.4	3.0	3.5	2.9	3.9
A 20 2_71.0	71.0	0.32	0.58	—	—	—	—	2.9	3.4	2.8	3.8
A 20 2_79.9	79.9	0.30	0.56	—	—	—	—	2.9	3.4	2.8	3.8
A 20 2_92.3	92.3	0.29	0.55	—	—	—	—	—	—	—	—
A 20 3_109.2	109.2	0.29	0.55	0.31	0.75	2.8	3.3	2.9	3.4	2.8	3.8
A 20 3_120.5	120.5	0.29	0.55	0.31	0.75	2.8	3.3	2.9	3.4	2.8	3.8
A 20 3_129.1	129.1	0.29	0.55	0.31	0.75	2.8	3.3	2.9	3.4	2.8	3.8
A 20 3_146.1	146.1	0.29	0.55	0.31	0.75	2.8	3.3	2.9	3.4	2.8	3.8
A 20 3_163.4	163.4	0.28	0.54	0.30	0.74	2.8	3.3	2.9	3.4	2.8	3.8
A 20 3_178.3	178.3	0.28	0.54	0.30	0.74	2.8	3.3	2.9	3.4	2.8	3.8
A 20 3_199.2	199.2	0.28	0.54	0.30	0.74	2.8	3.3	2.9	3.4	2.8	3.8
A 20 3_221.3	221.3	0.28	0.54	0.30	0.74	2.8	3.3	2.9	3.4	2.8	3.8
A 20 3_260.5	260.5	0.28	0.54	0.30	0.74	2.8	3.3	2.9	3.4	2.8	3.8
A 20 3_292.8	292.8	0.28	0.54	0.30	0.74	2.8	3.3	2.9	3.4	2.8	3.8
A 20 3_329.4	329.4	0.28	0.54	0.30	0.74	2.8	3.3	2.9	3.4	2.8	3.8
A 20 3_380.9	380.9	0.28	0.54	0.30	0.74	2.8	3.3	2.9	3.4	2.8	3.8

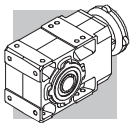

A 30

	i	J (•10-4) [kgm2]							
			IEC						
			63	71	80	90	100	112	
A 30 2_5.4	5.4	4.5	—	—	7.4	7.3	8.6	8.6	6.9
A 30 2_6.4	6.4	3.4	—	—	6.6	6.6	7.8	7.8	6.0
A 30 2_7.0	7.0	2.9	—	—	5.8	5.8	7.0	7.0	5.2
A 30 2_8.5	8.5	2.2	—	—	5.1	5.1	6.3	6.3	4.6
A 30 2_9.3	9.3	1.6	3.1	3.1	4.5	4.4	5.7	5.7	4.0
A 30 2_10.5	10.5	2.3	—	—	5.2	5.1	6.4	6.4	4.6
A 30 2_11.8	11.8	1.1	2.6	2.6	4.0	3.9	5.2	5.2	3.4
A 30 2_13.6	13.6	1.5	—	—	4.4	4.3	5.6	5.6	3.9
A 30 2_16.3	16.3	1.2	—	—	4.1	4.0	5.3	5.3	3.5
A 30 2_18.0	18.0	0.90	2.4	2.4	3.8	3.7	5.0	5.0	3.2
A 30 2_20.5	20.5	0.70	2.2	2.2	3.6	3.5	4.8	4.8	3.1
A 30 2_22.8	22.8	0.60	2.1	2.1	3.5	3.4	4.7	4.7	3.0
A 30 2_26.5	26.5	0.50	2.0	2.0	3.4	3.3	4.6	4.6	2.9
A 30 2_29.3	29.3	0.40	1.9	1.9	3.3	3.2	4.5	4.5	2.8
A 30 2_33.4	33.4	0.35	1.8	1.8	3.2	3.1	4.4	4.4	2.7
A 30 2_36.6	36.6	0.30	1.8	1.8	3.2	3.1	4.4	4.4	2.7
A 30 2_39.3	39.3	0.25	1.7	1.7	3.1	3.0	4.3	4.3	2.6
A 30 2_43.4	43.4	0.20	1.7	1.7	3.1	3.0	4.3	4.3	2.6
A 30 2_48.3	48.3	0.20	1.7	1.7	3.1	3.0	4.3	4.3	2.6
A 30 2_52.7	52.7	0.20	1.7	1.7	3.1	3.0	4.3	4.3	2.5
A 30 2_59.4	59.4	0.10	1.6	1.6	3.0	2.9	4.2	4.2	2.5
A 30 2_66.0	66.0	0.10	1.6	1.6	3.0	2.9	4.2	4.2	2.5
A 30 2_76.5	76.5	0.10	1.6	1.6	3.0	2.9	4.2	4.2	2.5
A 30 2_86.7	86.7	0.10	1.6	1.6	3.0	2.9	4.2	4.2	2.5
A 30 2_97.5	97.5	0.10	1.6	1.6	3.0	2.9	4.2	4.2	2.4
A 30 3_109.1	109.1	0.10	1.6	1.6	3.0	2.9	4.2	4.2	0.90
A 30 3_120.5	120.5	0.10	1.6	1.6	3.0	2.9	4.2	4.2	0.90
A 30 3_137.4	137.4	0.10	1.6	1.6	3.0	2.9	4.2	4.2	0.90
A 30 3_150.7	150.7	0.10	1.6	1.6	3.0	2.9	4.2	4.2	0.90
A 30 3_161.4	161.4	0.10	1.6	1.6	3.0	2.9	4.2	4.2	0.90
A 30 3_178.5	178.5	0.10	1.6	1.6	3.0	2.9	4.2	4.2	0.90
A 30 3_198.5	198.5	0.10	1.6	1.6	3.0	2.9	4.2	4.2	0.90
A 30 3_216.6	216.6	0.10	1.6	1.6	3.0	2.9	4.2	4.2	0.90
A 30 3_244.3	244.3	0.10	1.6	1.6	3.0	2.9	4.2	4.2	0.90
A 30 3_271.5	271.5	0.10	1.6	1.6	3.0	2.9	4.2	4.2	0.90
A 30 3_314.5	314.5	0.10	1.6	1.6	3.0	2.9	4.2	4.2	0.90
A 30 3_356.3	356.3	0.06	1.6	1.6	3.0	2.9	4.2	4.2	0.90
A 30 3_400.8	400.8	0.04	1.5	1.6	2.9	2.8	4.1	4.1	0.90

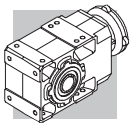

A 30

	i	J (•10-4) [kgm2]											
		SERVO											
		60A		60B 80A		95A		80C 95B 110A		95C 110B		130A	
		SK	SC	SK	SC	SK	SC	SK	SC	SK	SC	SK	SC
A 30 2_5.4	5.4	—	—	—	—	—	—	7.4	7.9	7.3	8.3	7.3	8.3
A 30 2_6.4	6.4	—	—	—	—	—	—	6.6	7.1	6.6	7.6	6.6	7.6
A 30 2_7.0	7.0	—	—	—	—	—	—	5.8	6.3	5.8	6.8	5.8	6.8
A 30 2_8.5	8.5	—	—	—	—	—	—	5.1	5.6	5.1	6.1	5.1	6.1
A 30 2_9.3	9.3	1.9	2.1	1.9	2.3	4.4	4.9	4.5	5.0	4.4	5.4	4.4	5.4
A 30 2_10.5	10.5	—	—	—	—	—	—	5.2	5.7	5.1	6.1	5.1	6.1
A 30 2_11.8	11.8	1.4	1.6	1.4	1.8	3.9	4.4	4.0	4.5	3.9	4.9	3.9	4.9
A 30 2_13.6	13.6	—	—	—	—	—	—	4.4	4.9	4.3	5.3	4.3	5.3
A 30 2_16.3	16.3	—	—	—	—	—	—	4.1	4.6	4.0	5.0	4.0	5.0
A 30 2_18.0	18.0	1.2	1.4	1.2	1.6	3.7	4.2	3.8	4.3	3.7	4.7	3.7	4.7
A 30 2_20.5	20.5	0.97	1.2	0.99	1.4	3.5	4.0	3.6	4.1	3.5	4.5	3.5	4.5
A 30 2_22.8	22.8	0.87	1.1	0.89	1.3	3.4	3.9	3.5	4.0	3.4	4.4	3.4	4.4
A 30 2_26.5	26.5	0.77	1.0	0.79	1.2	3.3	3.8	3.4	3.9	3.3	4.3	3.3	4.3
A 30 2_29.3	29.3	0.67	0.93	0.69	1.1	3.2	3.7	3.3	3.8	3.2	4.2	3.2	4.2
A 30 2_33.4	33.4	0.62	0.88	0.64	1.1	3.2	3.6	3.2	3.7	3.1	4.1	3.1	4.1
A 30 2_36.6	36.6	0.57	0.83	0.59	1.0	3.1	3.6	3.2	3.7	3.1	4.1	3.1	4.1
A 30 2_39.3	39.3	0.52	0.78	0.54	0.98	3.1	3.5	3.1	3.6	3.0	4.0	3.0	4.0
A 30 2_43.4	43.4	0.47	0.73	0.49	0.93	3.0	3.5	3.1	3.6	3.0	4.0	3.0	4.0
A 30 2_48.3	48.3	0.47	0.73	0.49	0.93	3.0	3.5	3.1	3.6	3.0	4.0	3.0	4.0
A 30 2_52.7	52.7	0.47	0.73	0.49	0.93	3.0	3.5	3.1	3.6	3.0	4.0	3.0	4.0
A 30 2_59.4	59.4	0.37	0.63	0.39	0.83	2.9	3.4	3.0	3.5	2.9	3.9	2.9	3.9
A 30 2_66.0	66.0	0.37	0.63	0.39	0.83	2.9	3.4	3.0	3.5	2.9	3.9	2.9	3.9
A 30 2_76.5	76.5	0.37	0.63	0.39	0.83	2.9	3.4	3.0	3.5	2.9	3.9	2.9	3.9
A 30 2_86.7	86.7	0.37	0.63	—	—	—	—	3.0	3.5	2.9	3.9	2.9	3.9
A 30 2_97.5	97.5	0.37	0.63	—	—	—	—	3.0	3.5	2.9	3.9	2.9	3.9
A 30 3_109.1	109.1	0.37	0.63	0.39	0.83	2.9	3.4	3.0	3.5	2.9	3.9	—	—
A 30 3_120.5	120.5	0.37	0.63	0.39	0.83	2.9	3.4	3.0	3.5	2.9	3.9	—	—
A 30 3_137.4	137.4	0.37	0.63	0.39	0.83	2.9	3.4	3.0	3.5	2.9	3.9	—	—
A 30 3_150.7	150.7	0.37	0.63	0.39	0.83	2.9	3.4	3.0	3.5	2.9	3.9	—	—
A 30 3_161.4	161.4	0.37	0.63	0.39	0.83	2.9	3.4	3.0	3.5	2.9	3.9	—	—
A 30 3_178.5	178.5	0.37	0.63	0.39	0.83	2.9	3.4	3.0	3.5	2.9	3.9	—	—
A 30 3_198.5	198.5	0.37	0.63	0.39	0.83	2.9	3.4	3.0	3.5	2.9	3.9	—	—
A 30 3_216.6	216.6	0.37	0.63	0.39	0.83	2.9	3.4	3.0	3.5	2.9	3.9	—	—
A 30 3_244.3	244.3	0.37	0.63	0.39	0.83	2.9	3.4	3.0	3.5	2.9	3.9	—	—
A 30 3_271.5	271.5	0.37	0.63	0.39	0.83	2.9	3.4	3.0	3.5	2.9	3.9	—	—
A 30 3_314.5	314.5	0.37	0.63	0.39	0.83	2.9	3.4	3.0	3.5	2.9	3.9	—	—
A 30 3_356.3	356.3	0.33	0.59	0.35	0.79	2.9	3.3	3.0	3.5	2.9	3.9	—	—
A 30 3_400.8	400.8	0.31	0.57	0.33	0.77	2.9	3.3	2.9	3.4	2.8	3.8	—	—

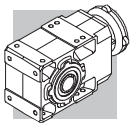

A 35

	i	J (•10-4) [kgm2]								
			IEC							
			63	71	80	90	100	112	132	
A 35 2_5.4	5.4	7.3	—	—	10	9.9	11	11	24	9.4
A 35 2_6.4	6.4	5.4	—	—	8.1	8.0	9.2	9.2	22	7.4
A 35 2_7.0	7.0	4.6	—	—	7.3	7.2	8.4	8.4	21	6.6
A 35 2_8.5	8.5	3.3	—	—	6.1	5.9	7.1	7.1	20	5.4
A 35 2_9.3	9.3	2.8	3.5	3.5	5.6	5.4	6.6	6.6	19	4.9
A 35 2_10.6	10.6	2.1	2.9	2.9	4.9	4.8	6.0	6.0	19	4.2
A 35 2_11.8	11.8	1.8	2.5	2.5	4.6	4.4	5.7	5.7	18	3.9
A 35 2_13.1	13.1	3.0	—	—	5.7	5.6	6.8	6.8	—	5.0
A 35 2_15.5	15.5	2.2	—	—	5.0	4.9	6.1	6.1	—	4.3
A 35 2_17.0	17.0	2.0	—	—	4.7	4.6	5.8	5.8	—	4.0
A 35 2_20.4	20.4	1.6	—	—	4.3	4.2	5.4	5.4	—	3.6
A 35 2_22.5	22.5	1.3	2.0	2.0	4.1	3.9	5.1	5.1	—	3.4
A 35 2_25.7	25.7	0.97	1.7	1.7	3.7	3.6	4.8	4.8	—	3.0
A 35 2_28.4	28.4	0.86	1.6	1.6	3.6	3.5	4.7	4.7	—	2.9
A 35 2_33.2	33.2	0.69	1.4	1.4	3.5	3.3	4.5	4.5	—	2.8
A 35 2_36.6	36.6	0.58	1.3	1.3	3.3	3.2	4.4	4.4	—	2.6
A 35 2_41.8	41.8	0.48	1.2	1.2	3.2	3.1	4.3	4.3	—	2.5
A 35 2_45.8	45.8	0.42	1.1	1.1	3.2	3.1	4.3	4.3	—	2.5
A 35 2_49.1	49.1	0.38	1.1	1.1	3.1	3.0	4.2	4.2	—	2.4
A 35 2_54.3	54.3	0.33	1.1	1.0	3.1	3.0	4.2	4.2	—	2.4
A 35 2_60.4	60.4	0.29	1.0	1.0	3.0	2.9	4.1	4.1	—	2.3
A 35 2_65.8	65.8	0.25	1.0	1.0	3.0	2.9	4.1	4.1	—	2.3
A 35 2_74.3	74.3	0.21	0.95	0.93	3.0	2.8	4.1	4.1	—	2.3
A 35 2_82.5	82.5	0.18	0.92	0.90	2.9	2.8	4.0	4.0	—	2.2
A 35 2_95.6	95.6	0.15	0.88	0.87	2.9	2.8	4.0	4.0	—	2.2
A 35 3_105.5	105.5	0.11	0.89	0.87	2.9	2.8	4.0	4.0	—	0.80
A 35 3_116.9	116.9	0.11	0.88	0.87	2.9	2.8	4.0	4.0	—	0.79
A 35 3_136.3	136.3	0.10	0.87	0.86	2.9	2.8	4.0	4.0	—	0.78
A 35 3_150.6	150.6	0.09	0.86	0.85	2.9	2.8	4.0	4.0	—	0.77
A 35 3_171.8	171.8	0.08	0.86	0.84	2.9	2.8	4.0	4.0	—	0.77
A 35 3_188.3	188.3	0.08	0.85	0.84	2.9	2.7	4.0	4.0	—	0.76
A 35 3_201.8	201.8	0.08	0.85	0.84	2.9	2.7	4.0	4.0	—	0.76
A 35 3_223.2	223.2	0.08	0.85	0.84	2.9	2.7	4.0	4.0	—	0.76
A 35 3_248.1	248.1	0.07	0.85	0.83	2.9	2.7	4.0	4.0	—	0.76
A 35 3_270.7	270.7	0.07	0.84	0.83	2.9	2.7	4.0	4.0	—	0.75
A 35 3_305.4	305.4	0.07	0.84	0.83	2.9	2.7	4.0	4.0	—	0.75
A 35 3_339.3	339.3	0.07	0.84	0.83	2.9	2.7	4.0	4.0	—	0.75
A 35 3_393.2	393.2	0.07	0.84	0.83	2.9	2.7	3.9	3.9	—	0.75

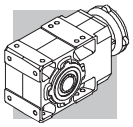

A 35

	i	J (•10-4) [kgm2]											
		SERVO											
		60A		60B 80A		95A		80C 95B 110A		95C 110B		130A	
		SK	SC	SK	SC	SK	SC	SK	SC	SK	SC	SK	SC
A 35 2_5.4	5.4	—	—	—	—	—	—	10	11	9.9	10.9	9.9	11
A 35 2_6.4	6.4	—	—	—	—	—	—	8.1	8.6	8.0	9.0	8.0	9.0
A 35 2_7.0	7.0	—	—	—	—	—	—	7.3	7.8	7.2	8.2	7.2	8.2
A 35 2_8.5	8.5	—	—	—	—	—	—	6.1	6.6	5.9	6.9	5.9	6.9
A 35 2_9.3	9.3	3.1	3.3	3.1	3.5	5.6	6.1	5.6	6.1	5.4	6.4	5.4	6.4
A 35 2_10.6	10.6	2.4	2.6	2.4	2.8	4.9	5.4	4.9	5.4	4.8	5.8	4.8	5.8
A 35 2_11.8	11.8	2.1	2.3	2.1	2.5	4.6	5.1	4.6	5.1	4.4	5.4	4.4	5.4
A 35 2_13.1	13.1	—	—	—	—	—	—	5.7	6.2	5.6	6.6	5.6	6.6
A 35 2_15.5	15.5	—	—	—	—	—	—	5.0	5.5	4.9	5.9	4.9	5.9
A 35 2_17.0	17.0	—	—	—	—	—	—	4.7	5.2	4.6	5.6	4.6	5.6
A 35 2_20.4	20.4	—	—	—	—	—	—	4.3	4.8	4.2	5.2	4.2	5.2
A 35 2_22.5	22.5	1.6	1.8	1.6	2.0	4.1	4.6	4.1	4.6	3.9	4.9	3.9	4.9
A 35 2_25.7	25.7	1.2	1.5	1.3	1.7	3.8	4.2	3.7	4.2	3.6	4.6	3.6	4.6
A 35 2_28.4	28.4	1.1	1.4	1.2	1.6	3.7	4.1	3.6	4.1	3.5	4.5	3.5	4.5
A 35 2_33.2	33.2	0.96	1.2	0.98	1.4	3.5	3.9	3.5	4.0	3.3	4.3	3.3	4.3
A 35 2_36.6	36.6	0.85	1.1	0.87	1.3	3.4	3.8	3.3	3.8	3.2	4.2	3.2	4.2
A 35 2_41.8	41.8	0.75	1.0	0.77	1.2	3.3	3.7	3.2	3.7	3.1	4.1	3.1	4.1
A 35 2_45.8	45.8	0.69	0.95	0.71	1.1	3.2	3.7	3.2	3.7	3.1	4.1	3.1	4.1
A 35 2_49.1	49.1	0.65	0.91	0.67	1.1	3.2	3.6	3.1	3.6	3.0	4.0	3.0	4.0
A 35 2_54.3	54.3	0.60	0.86	0.62	1.1	3.2	3.6	3.1	3.6	3.0	4.0	3.0	4.0
A 35 2_60.4	60.4	0.56	0.82	0.58	1.0	3.1	3.5	3.0	3.5	2.9	3.9	2.9	3.9
A 35 2_65.8	65.8	0.52	0.78	0.54	0.98	3.1	3.5	3.0	3.5	2.9	3.9	2.9	3.9
A 35 2_74.3	74.3	0.48	0.74	0.50	0.94	3.0	3.5	3.0	3.5	2.8	3.8	2.8	3.8
A 35 2_82.5	82.5	0.45	0.71	0.47	0.91	3.0	3.4	2.9	3.4	2.8	3.8	2.8	3.8
A 35 2_95.6	95.6	0.42	0.68	0.44	0.88	3.0	3.4	2.9	3.4	2.8	3.8	2.8	3.8
A 35 3_105.5	105.5	0.38	0.64	0.40	0.84	2.9	3.4	2.9	3.4	2.8	3.8	—	—
A 35 3_116.9	116.9	0.38	0.64	0.40	0.84	2.9	3.4	2.9	3.4	2.8	3.8	—	—
A 35 3_136.3	136.3	0.37	0.63	0.39	0.83	2.9	3.4	2.9	3.4	2.8	3.8	—	—
A 35 3_150.6	150.6	0.36	0.62	0.38	0.82	2.9	3.3	2.9	3.4	2.8	3.8	—	—
A 35 3_171.8	171.8	0.35	0.61	0.37	0.81	2.9	3.3	2.9	3.4	2.8	3.8	—	—
A 35 3_188.3	188.3	0.35	0.61	0.37	0.81	2.9	3.3	2.9	3.4	2.7	3.7	—	—
A 35 3_201.8	201.8	0.35	0.61	0.37	0.81	2.9	3.3	2.9	3.4	2.7	3.7	—	—
A 35 3_223.2	223.2	0.35	0.61	0.37	0.81	2.9	3.3	2.9	3.4	2.7	3.7	—	—
A 35 3_248.1	248.1	0.34	0.60	0.36	0.80	2.9	3.3	2.9	3.4	2.7	3.7	—	—
A 35 3_270.7	270.7	0.34	0.60	0.36	0.80	2.9	3.3	2.9	3.4	2.7	3.7	—	—
A 35 3_305.4	305.4	0.34	0.60	0.36	0.80	2.9	3.3	2.9	3.4	2.7	3.7	—	—
A 35 3_339.3	339.3	0.34	0.60	0.36	0.80	2.9	3.3	2.9	3.4	2.7	3.7	—	—
A 35 3_393.2	393.2	0.34	0.60	0.36	0.80	2.9	3.3	2.9	3.4	2.7	3.7	—	—

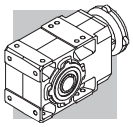

A 41

	i	J (•10-4) [kgm2]								
			IEC							
			63	71	80	90	100	112	132	
A 41 2_5.2	5.2	13	—	—	16	16	17	17	32	23
A 41 2_7.1	7.1	7.3	—	—	10	10	11	11	26	18
A 41 2_8.3	8.3	5.9	—	—	8.8	8.7	10	10	25	16
A 41 2_9.2	9.2	4.5	—	—	7.4	7.3	8.6	8.6	23	15
A 41 2_10.1	10.1	5.9	—	—	8.8	8.7	10	10	25	16
A 41 2_11.7	11.7	2.9	4.4	4.4	5.8	5.7	7.0	7.0	22	13
A 41 2_13.8	13.8	3.6	—	—	6.5	6.4	7.7	7.7	23	14
A 41 2_16.1	16.1	2.9	—	—	5.8	5.7	7.0	7.0	22	13
A 41 2_17.8	17.8	2.2	—	—	5.1	5.0	6.3	6.3	21	11
A 41 2_22.7	22.7	1.5	3.0	3.0	4.4	4.3	5.6	5.6	20	11
A 41 2_28.3	28.3	1.1	2.6	2.6	4.0	3.9	5.2	5.2	20	10
A 41 2_35.9	35.9	1.7	3.2	3.2	4.6	4.5	5.8	5.8	20	9.8
A 41 2_45.1	45.1	1.5	3.0	3.0	4.4	4.3	5.6	5.6	20	9.6
A 41 2_48.3	48.3	1.4	2.9	2.9	4.3	4.2	5.5	5.5	—	9.5
A 41 2_53.1	53.1	1.4	2.9	2.9	4.3	4.2	5.5	5.5	—	9.5
A 41 2_58.8	58.8	1.3	2.8	2.8	4.2	4.1	5.4	5.4	—	9.4
A 41 2_64.2	64.2	1.3	2.8	2.8	4.2	4.1	5.4	5.4	—	9.4
A 41 2_71.3	71.3	1.2	2.7	2.7	4.1	4.0	5.3	5.3	—	9.3
A 41 2_79.2	79.2	1.2	2.7	2.7	4.1	4.0	5.3	5.3	—	9.3
A 41 3_92.8	92.8	1.1	2.6	2.6	4.0	3.9	5.2	5.2	—	9.2
A 41 3_115.9	115.9	0.20	1.7	1.7	2.9	3.0	4.3	4.3	—	2.1
A 41 3_146.9	146.9	0.10	1.6	1.6	2.8	2.9	4.2	4.2	—	2.1
A 41 3_184.4	184.4	0.10	1.6	1.6	2.8	2.9	4.2	4.2	—	2.1
A 41 3_197.5	197.5	0.10	1.6	1.6	2.8	2.9	4.2	4.2	—	2.0
A 41 3_217.4	217.4	0.10	1.6	1.6	2.8	2.9	4.2	4.2	—	2.0
A 41 3_240.6	240.6	0.10	1.6	1.6	2.8	2.9	4.2	4.2	—	2.0
A 41 3_262.5	262.5	0.10	1.6	1.6	2.8	2.9	4.2	4.2	—	2.0
A 41 3_291.7	291.7	0.10	1.6	1.6	2.8	2.9	4.2	4.2	—	2.0
A 41 3_324.2	324.2	0.10	1.6	1.6	2.8	2.9	4.2	4.2	—	2.0
A 41 3_376.8	376.8	0.10	1.6	1.6	2.8	2.9	4.2	4.2	—	2.0

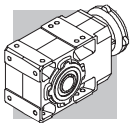

A 41

	i	J (•10-4) [kgm2] SERVO																	
		60A		60B 80A		80B		95A		80C 95B 110A		95C 110B		130A		130B 180A		180B	
		SK	SC	SK	SC	SK	SC	SK	SC	SK	SC	SK	SC	SK	SC	SK	SC	SK	SC
A 41 2_5.2	5.2	—	—	—	—	—	—	—	—	16	16.5	16	17	16	17	30	32	32	37
A 41 2_7.1	7.1	—	—	—	—	—	—	—	—	10	10.5	10	11	10	11	24	27	26	31
A 41 2_8.3	8.3	—	—	—	—	—	—	—	—	8.8	9.3	8.7	9.7	8.7	9.7	23	25	25	30
A 41 2_9.2	9.2	—	—	—	—	—	—	—	—	7.4	7.9	7.3	8.3	7.3	8.3	21	24	23	28
A 41 2_10.1	10.1	—	—	—	—	—	—	—	—	8.8	9.3	8.7	9.7	8.7	9.7	23	25	25	30
A 41 2_11.7	11.7	—	—	—	—	5.7	6.2	5.7	6.2	5.8	6.3	5.7	6.7	5.7	6.7	20	22	22	27
A 41 2_13.8	13.8	—	—	—	—	—	—	—	—	6.5	7.0	6.4	7.4	6.4	7.4	21	23	23	28
A 41 2_16.1	16.1	—	—	—	—	—	—	—	—	5.8	6.3	5.7	6.7	5.7	6.7	20	22	22	27
A 41 2_17.8	17.8	—	—	—	—	—	—	—	—	5.1	5.6	5.0	6.0	5.0	6.0	19	22	21	26
A 41 2_22.7	22.7	—	—	—	—	4.3	4.8	4.3	4.8	4.4	4.9	4.3	5.3	4.3	5.3	18	21	20	25
A 41 2_28.3	28.3	—	—	—	—	3.9	4.4	3.9	4.4	4.0	4.5	3.9	4.9	3.9	4.9	18	21	20	25
A 41 2_35.9	35.9	—	—	—	—	4.5	5.0	4.5	5.0	4.6	5.1	4.5	5.5	4.5	5.5	19	21	20	25
A 41 2_45.1	45.1	—	—	—	—	4.3	4.8	4.3	4.8	4.4	4.9	4.3	5.3	4.3	5.3	18	21	20	25
A 41 2_48.3	48.3	—	—	—	—	4.2	4.7	4.2	4.7	4.3	4.8	4.2	5.2	4.2	5.2	—	—	—	—
A 41 2_53.1	53.1	—	—	—	—	4.2	4.7	4.2	4.7	4.3	4.8	4.2	5.2	4.2	5.2	—	—	—	—
A 41 2_58.8	58.8	—	—	—	—	4.1	4.6	4.1	4.6	4.2	4.7	4.1	5.1	4.1	5.1	—	—	—	—
A 41 2_64.2	64.2	—	—	—	—	4.1	4.6	4.1	4.6	4.2	4.7	4.1	5.1	4.1	5.1	—	—	—	—
A 41 2_71.3	71.3	—	—	—	—	4.0	4.5	4.0	4.5	4.1	4.6	4.0	5.0	4.0	5.0	—	—	—	—
A 41 2_79.2	79.2	—	—	—	—	4.0	4.5	4.0	4.5	4.1	4.6	4.0	5.0	4.0	5.0	—	—	—	—
A 41 3_92.8	92.8	1.4	1.6	1.4	1.8	—	—	3.9	4.4	4.0	4.5	3.9	4.9	—	—	—	—	—	—
A 41 3_115.9	115.9	0.47	0.73	0.49	0.93	—	—	3.0	3.5	2.9	3.4	3.0	4.0	—	—	—	—	—	—
A 41 3_146.9	146.9	0.37	0.63	0.39	0.83	—	—	2.9	3.4	2.8	3.3	2.9	3.9	—	—	—	—	—	—
A 41 3_184.4	184.4	0.37	0.63	0.39	0.83	—	—	2.9	3.4	2.8	3.3	2.9	3.9	—	—	—	—	—	—
A 41 3_197.5	197.5	0.37	0.63	0.39	0.83	—	—	2.9	3.4	2.8	3.3	2.9	3.9	—	—	—	—	—	—
A 41 3_217.4	217.4	0.37	0.63	0.39	0.83	—	—	2.9	3.4	2.8	3.3	2.9	3.9	—	—	—	—	—	—
A 41 3_240.6	240.6	0.37	0.63	0.39	0.83	—	—	2.9	3.4	2.8	3.3	2.9	3.9	—	—	—	—	—	—
A 41 3_262.5	262.5	0.37	0.63	0.39	0.83	—	—	2.9	3.4	2.8	3.3	2.9	3.9	—	—	—	—	—	—
A 41 3_291.7	291.7	0.37	0.63	0.39	0.83	—	—	2.9	3.4	2.8	3.3	2.9	3.9	—	—	—	—	—	—
A 41 3_324.2	324.2	0.37	0.63	0.39	0.83	—	—	2.9	3.4	2.8	3.3	2.9	3.9	—	—	—	—	—	—
A 41 3_376.8	376.8	0.37	0.63	0.39	0.83	—	—	2.9	3.4	2.8	3.3	2.9	3.9	—	—	—	—	—	—

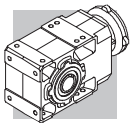

A 50

	i	J (•10-4) [kgm2]										
			IEC									
			63	71	80	90	100	112	132	160	180	
A 50 2_7.7	7.7	15	—	—	18	18	19	19	34	93	91	24
A 50 2_9.7	9.7	10	—	—	13	13	14	14	29	89	86	19
A 50 2_13.1	13.1	6.3	—	—	9.2	9.1	10	10	25	85	82	15
A 50 2_16.6	16.6	4.2	—	—	7.0	7.0	8.2	8.2	23	82	80	13
A 50 2_20.9	20.9	2.8	4.2	4.2	5.7	5.6	6.9	6.9	22	81	79	12
A 50 3_24.0	24.0	6.0	—	—	8.9	8.8	10	10	25	84	82	15
A 50 3_26.4	26.4	5.8	—	—	8.7	8.6	9.9	9.9	25	84	82	15
A 50 3_32.4	32.4	4.0	—	—	6.8	6.8	8.1	8.1	23	82	80	13
A 50 3_35.6	35.6	3.9	—	—	6.7	6.7	8.0	8.0	23	82	80	13
A 50 3_40.9	40.9	2.7	—	—	5.6	5.5	6.8	6.8	22	81	79	12
A 50 3_45.0	45.0	2.6	—	—	5.5	5.4	6.7	6.7	22	81	79	12
A 50 3_51.7	51.7	1.9	3.4	3.4	4.7	4.7	6.0	6.0	21	80	78	11
A 50 3_56.8	56.8	1.9	3.3	3.3	4.7	4.6	5.9	5.9	21	80	78	11
A 50 3_63.9	63.9	1.4	2.9	2.8	4.2	4.2	5.5	5.5	20	80	77	11
A 50 3_70.2	70.2	1.4	2.8	2.8	4.2	4.1	5.4	5.4	20	80	77	10
A 50 3_81.5	81.5	0.90	2.4	2.4	3.8	3.7	5.0	5.0	20	79	77	10
A 50 3_89.5	89.5	0.90	2.4	2.4	3.7	3.7	5.0	5.0	20	79	77	10
A 50 3_99.5	99.5	0.60	2.1	2.1	3.5	3.4	4.7	4.7	20	79	77	9.7
A 50 3_109.4	109.4	0.60	2.1	2.1	3.5	3.4	4.7	4.7	20	79	77	9.7
A 50 3_118.0	118.0	0.50	2.0	2.0	3.4	3.3	4.6	4.6	—	—	—	9.6
A 50 3_129.7	129.7	0.50	2.0	2.0	3.4	3.3	4.6	4.6	—	—	—	9.6
A 50 3_140.6	140.6	0.40	1.8	1.8	3.2	3.2	4.4	4.4	—	—	—	9.4
A 50 3_154.6	154.6	0.40	1.8	1.8	3.2	3.2	4.4	4.4	—	—	—	9.4
A 50 3_173.4	173.4	0.30	1.7	1.7	3.1	3.0	4.3	4.3	—	—	—	9.3
A 50 3_190.6	190.6	0.20	1.7	1.7	3.1	3.0	4.3	4.3	—	—	—	9.3

Im Hinblick auf die Trägheitsmomente der 4-stufigen Getriebe verweisen wir auf unseren Technischen Dienst.

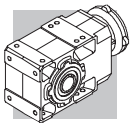

A 50

	i	J (•10-4) [kgm2]									
		SERVO									
		80B 95A		80C 95B 110A		95C 110B 130A		130B 180A		180B	
		SK	SC	SK	SC	SK	SC	SK	SC	SK	SC
A 50 2_7.7	7.7	—	—	18	19	18	19	32	34	34	39
A 50 2_9.7	9.7	—	—	13	14	13	14	27	29	29	34
A 50 2_13.1	13.1	—	—	9.2	9.7	9.1	10	23	26	25	30
A 50 2_16.6	16.6	—	—	7.0	7.5	7.0	8.0	21	24	23	28
A 50 2_20.9	20.9	5.6	6.1	5.7	6.2	5.6	6.6	20	22	22	27
A 50 3_24.0	24.0	—	—	8.9	9.4	8.8	9.8	23	25	25	30
A 50 3_26.4	26.4	—	—	8.7	9.2	8.6	9.6	23	25	25	30
A 50 3_32.4	32.4	—	—	6.8	7.3	6.8	7.8	21	23	23	28
A 50 3_35.6	35.6	—	—	6.7	7.2	6.7	7.7	21	23	23	28
A 50 3_40.9	40.9	—	—	5.6	6.1	5.5	6.5	20	22	22	27
A 50 3_45.0	45.0	—	—	5.5	6.0	5.4	6.4	20	22	22	27
A 50 3_51.7	51.7	4.7	5.1	4.7	5.2	4.7	5.7	19	21	21	26
A 50 3_56.8	56.8	4.7	5.1	4.7	5.2	4.6	5.6	19	21	21	26
A 50 3_63.9	63.9	4.2	4.7	4.2	5.2	4.2	5.2	18	21	20	25
A 50 3_70.2	70.2	4.2	4.7	4.2	5.2	4.1	5.1	18	21	20	25
A 50 3_81.5	81.5	3.7	4.1	3.8	4.3	3.7	4.7	18	20	20	25
A 50 3_89.5	89.5	3.7	4.1	3.7	4.2	3.7	4.7	18	20	20	25
A 50 3_99.5	99.5	3.4	3.9	3.5	4.0	3.4	4.4	18	20	20	25
A 50 3_109.4	109.4	3.4	3.9	3.5	4.0	3.4	4.4	18	20	20	25
A 50 3_118.0	118.0	3.3	3.8	3.4	4.0	3.3	4.3	—	—	—	—
A 50 3_129.7	129.7	3.3	3.8	3.4	4.0	3.3	4.3	—	—	—	—
A 50 3_140.6	140.6	3.2	3.7	3.2	3.7	3.2	4.2	—	—	—	—
A 50 3_154.6	154.6	3.2	3.7	3.2	3.7	3.2	4.2	—	—	—	—
A 50 3_173.4	173.4	3.1	3.6	3.1	3.6	3.0	4.0	—	—	—	—
A 50 3_190.6	190.6	3.0	3.5	3.1	3.6	3.0	4.0	—	—	—	—

Im Hinblick auf die Trägheitsmomente der 4-stufigen Getriebe verweisen wir auf unseren Technischen Dienst.

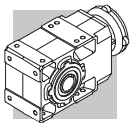

A 55

	i	J (•10-4) [kgm2]										
			IEC									
			63	71	80	90	100	112	132	160	180	
A 55 2_4.9	4.9	61	—	—	—	—	—	—	77	123	120	70
A 55 2_6.4	6.4	41	—	—	—	—	—	—	57	103	100	50
A 55 2_8.5	8.5	26	—	—	—	—	—	—	42	88	85	35
A 55 2_10.4	10.4	19	—	—	—	—	—	—	35	81	78	28
A 55 2_13.1	13.1	12	—	—	14	14	17	17	28	74	72	21
A 55 2_15.7	15.7	8.9	—	—	11	11	14	14	25	71	68	18
A 55 2_19.2	19.2	6.2	—	—	8.6	8.5	11	11	23	68	66	15
A 55 3_23.8	23.8	11	—	—	13	13	16	16	27	73	70	20
A 55 3_29.9	29.9	7.9	—	—	10	10	13	13	24	70	67	17
A 55 3_40.3	40.3	5.3	—	—	7.8	7.6	10	10	22	68	65	14
A 55 3_51.0	51.0	3.6	—	—	6.0	5.9	8.6	8.6	20	66	63	13
A 55 3_64.3	64.3	2.6	3.1	3.0	5.1	5.0	7.7	7.7	19	65	62	12
A 55 3_79.5	79.5	2.0	2.4	2.4	4.5	4.4	7.1	7.1	18	64	62	11
A 55 3_101.4	101.4	1.3	1.8	1.8	3.8	3.7	6.5	6.5	18	64	61	10
A 55 3_123.9	123.9	1.0	1.5	1.5	3.6	3.4	6.2	6.2	17	63	61	10
A 55 3_132.7	132.7	0.71	1.4	1.4	3.5	3.3	6.1	6.1	—	—	—	9.5
A 55 3_146.8	146.8	0.66	1.4	1.4	3.4	3.3	6.0	6.0	—	—	—	9.4
A 55 3_160.4	160.4	0.58	1.3	1.3	3.3	3.2	6.0	6.0	—	—	—	9.4
A 55 3_175.0	175.0	0.50	1.2	1.2	3.3	3.1	5.9	5.9	—	—	—	9.3
A 55 3_194.2	194.2	0.43	1.2	1.2	3.2	3.1	5.8	5.8	—	—	—	9.2

Im Hinblick auf die Trägheitsmomente der 4-stufigen Getriebe verweisen wir auf unseren Technischen Dienst.

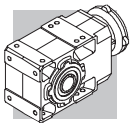

A 55

	i	J (•10-4) [kgm2]									
		SERVO									
		80B 95A		80C 95B 110A		95C 110B 130A		130B 180A		180B	
		SK	SC	SK	SC	SK	SC	SK	SC	SK	SC
A 55 2_4.9	4.9	—	—	—	—	—	—	78	80	77	82
A 55 2_6.4	6.4	—	—	—	—	—	—	58	60	57	62
A 55 2_8.5	8.5	—	—	—	—	—	—	43	45	42	47
A 55 2_10.4	10.4	—	—	—	—	—	—	36	38	35	40
A 55 2_13.1	13.1	—	—	14	15	14	15	29	31	28	33
A 55 2_15.7	15.7	—	—	11	12	11	12	26	28	25	30
A 55 2_19.2	19.2	—	—	8.6	9.1	8.5	9.5	23	26	23	28
A 55 3_23.8	23.8	—	—	13	14	13	14	28	30	27	32
A 55 3_29.9	29.9	—	—	10	11	10	11	25	27	24	29
A 55 3_40.3	40.3	—	—	7.8	8.3	7.6	8.6	22	25	22	27
A 55 3_51.0	51.0	—	—	6.0	6.5	5.9	6.9	21	23	20	25
A 55 3_64.3	64.3	5.4	5.9	5.1	5.6	5.0	6.0	20	22	19	24
A 55 3_79.5	79.5	4.8	5.3	4.5	5.0	4.4	5.4	19	21	18	23
A 55 3_101.4	101.4	4.1	4.6	3.8	4.3	3.7	4.7	18	21	18	23
A 55 3_123.9	123.9	3.8	4.3	3.6	4.1	3.4	4.4	18	20	17	22
A 55 3_132.7	132.7	3.5	4.0	3.5	4.0	3.3	4.3	—	—	—	—
A 55 3_146.8	146.8	3.5	3.9	3.4	3.9	3.3	4.3	—	—	—	—
A 55 3_160.4	160.4	3.4	3.8	3.3	3.8	3.2	4.2	—	—	—	—
A 55 3_175.0	175.0	3.3	3.8	3.3	3.8	3.1	4.1	—	—	—	—
A 55 3_194.2	194.2	3.3	3.7	3.2	3.7	3.1	4.1	—	—	—	—

Im Hinblick auf die Trägheitsmomente der 4-stufigen Getriebe verweisen wir auf unseren Technischen Dienst.

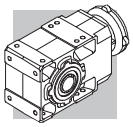

A 60

	i	J (•10-4) [kgm2]										
			IEC									
			63	71	80	90	100	112	132	160	180	
A 60 2_7.9	7.9	36	—	—	—	—	—	—	54	114	112	57
A 60 2_10.3	10.3	23	—	—	25	25	27	27	41	101	99	44
A 60 2_12.7	12.7	16	—	—	19	19	20	20	35	94	92	37
A 60 2_16.7	16.7	9.4	—	—	12	12	14	14	28	88	85	30
A 60 2_20.6	20.6	6.7	—	—	9.6	9.5	11	11	26	85	83	28
A 60 3_25.7	25.7	14	—	—	17	17	18	18	33	92	90	35
A 60 3_27.9	27.9	14	—	—	17	17	18	18	33	92	90	35
A 60 3_31.7	31.7	10	—	—	13	13	15	15	29	89	86	31
A 60 3_34.3	34.3	10	—	—	13	13	14	14	29	89	86	31
A 60 3_41.7	41.7	6.1	—	—	9.0	8.9	10	10	25	84	82	27
A 60 3_45.2	45.2	6.1	—	—	8.9	8.9	10	10	25	84	82	27
A 60 3_51.3	51.3	5.0	—	—	7.4	7.4	8.7	8.7	24	83	81	26
A 60 3_55.6	55.6	4.5	—	—	7.4	7.3	8.6	8.6	23	83	81	26
A 60 3_65.0	65.0	3.2	4.7	4.6	6.1	6.0	7.3	7.3	22	82	79	24
A 60 3_70.4	70.4	3.2	4.7	4.6	6.1	6.0	7.3	7.3	22	81	79	24
A 60 3_79.7	79.7	2.1	3.6	3.5	5.0	4.9	6.2	6.2	21	80	78	23
A 60 3_86.4	86.4	2.1	3.6	3.5	5.0	4.9	6.2	6.2	21	80	78	23
A 60 3_99.5	99.5	2.0	3.5	3.4	4.3	4.3	5.6	5.6	20	80	78	23
A 60 3_107.8	107.8	1.5	3.0	2.9	4.3	4.3	5.6	5.6	20	80	78	22
A 60 3_123.0	123.0	1.1	2.6	2.5	4.0	3.9	5.2	5.2	20	79	77	22
A 60 3_133.3	133.3	1.1	2.6	2.5	3.9	3.9	5.2	5.2	20	79	77	22
A 60 3_144.0	144.0	0.80	2.3	2.2	3.7	3.6	5.0	5.0	—	—	—	22
A 60 3_156.0	156.0	0.80	2.3	2.2	3.7	3.6	5.0	5.0	—	—	—	22
A 60 3_171.5	171.5	0.60	2.1	2.0	3.5	3.4	4.7	4.7	—	—	—	22
A 60 3_185.8	185.8	0.60	2.1	2.0	3.5	3.4	4.7	4.7	—	—	—	22

Im Hinblick auf die Trägheitsmomente der 4-stufigen Getriebe verweisen wir auf unseren Technischen Dienst.

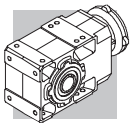

A 60

	i	J (•10-4) [kgm2]									
		SERVO									
		95A		80C 95B 110A		95C 110B 130A		130B 180A		180B	
		SK	SC	SK	SC	SK	SC	SK	SC	SK	SC
A 60 2_7.9	7.9	—	—	—	—	—	—	53	55	54	59
A 60 2_10.3	10.3	—	—	25	26	25	26	40	42	41	46
A 60 2_12.7	12.7	—	—	19	20	19	20	33	35	35	40
A 60 2_16.7	16.7	—	—	12	13	12	13	26	29	28	33
A 60 2_20.6	20.6	—	—	9.6	10	9.5	10	24	26	26	31
A 60 3_25.7	25.7	—	—	17	18	17	18	31	33	33	38
A 60 3_27.9	27.9	—	—	17	18	17	18	31	33	33	38
A 60 3_31.7	31.7	—	—	13	14	13	14	27	29	29	34
A 60 3_34.3	34.3	—	—	13	14	13	14	27	29	29	34
A 60 3_41.7	41.7	—	—	9.0	9.5	8.9	9.9	23	26	25	30
A 60 3_45.2	45.2	—	—	8.9	9.4	8.9	9.9	23	26	25	30
A 60 3_51.3	51.3	—	—	7.4	7.9	7.4	8.4	22	24	24	29
A 60 3_55.6	55.6	—	—	7.4	7.9	7.3	8.3	21	24	23	28
A 60 3_65.0	65.0	6.0	6.5	6.1	6.6	6.0	7.0	20	23	22	27
A 60 3_70.4	70.4	6.0	6.5	6.1	6.6	6.0	7.0	20	23	22	27
A 60 3_79.7	79.7	4.9	5.4	5.0	5.5	4.9	5.9	19	22	21	26
A 60 3_86.4	86.4	4.9	5.4	5.0	5.5	4.9	5.9	19	22	21	26
A 60 3_99.5	99.5	4.8	5.3	4.3	4.8	4.3	5.3	19	21	20	25
A 60 3_107.8	107.8	4.3	4.8	4.3	4.8	4.3	5.3	18	21	20	25
A 60 3_123.0	123.0	3.9	4.4	4.0	4.5	3.9	4.9	18	21	20	25
A 60 3_133.3	133.3	3.9	4.4	3.9	4.4	3.9	4.9	18	21	20	25
A 60 3_144.0	144.0	3.6	4.1	3.7	4.2	3.6	4.6	—	—	—	—
A 60 3_156.0	156.0	3.6	4.1	3.7	4.2	3.6	4.6	—	—	—	—
A 60 3_171.5	171.5	3.4	3.9	3.5	4.0	3.4	4.4	—	—	—	—
A 60 3_185.8	185.8	3.4	3.9	3.5	4.0	3.4	4.4	—	—	—	—

Im Hinblick auf die Trägheitsmomente der 4-stufigen Getriebe verweisen wir auf unseren Technischen Dienst.

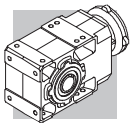

A 70

	i	J (•10-4) [kgm2]											
			IEC										
			80	90	100	112	132	160	180	200	225	250	
A 70 3_9.4	9.4	—	—	—	—	—	—	187	185	194	—	—	150
A 70 3_10.2	10.2	—	—	—	—	—	—	183	180	190	—	—	146
A 70 3_12.1	12.1	—	—	—	—	—	—	150	148	157	—	—	113
A 70 3_13.1	13.1	—	—	—	—	—	—	147	145	154	—	—	111
A 70 3_15.4	15.4	45	—	—	—	—	64	124	121	161	—	—	87
A 70 3_16.7	16.7	44	—	—	—	—	63	122	120	129	—	—	85
A 70 3_19.7	19.7	30	—	—	—	—	49	109	107	—	—	—	72
A 70 3_21.3	21.3	29	—	—	—	—	48	108	106	—	—	—	71
A 70 3_23.5	23.5	—	—	—	—	—	—	116	114	123	—	—	79
A 70 3_27.8	27.8	—	—	—	—	—	—	118	116	125	—	—	81
A 70 3_30.1	30.1	—	—	—	—	—	—	117	115	124	—	—	81
A 70 3_35.4	35.4	26	—	—	—	—	45	104	102	111	—	—	67
A 70 3_38.4	38.4	25	—	—	—	—	44	104	101	111	—	—	67
A 70 3_45.2	45.2	18	—	—	—	—	37	97	94	—	—	—	59
A 70 3_49.0	49.0	18	—	—	—	—	37	96	94	—	—	—	59
A 70 3_53.2	53.2	15	—	—	—	—	34	93	91	—	—	—	56
A 70 3_57.7	57.7	15	—	—	—	—	34	93	91	—	—	—	56
A 70 3_66.9	66.9	9.7	12	12	13	13	29	88	86	—	—	—	51
A 70 3_72.5	72.5	9.6	12	12	13	13	28	88	86	—	—	—	51
A 70 3_79.3	79.3	6.8	9.4	9.3	11	11	26	85	83	—	—	—	48
A 70 3_85.9	85.9	6.7	9.3	9.3	11	11	26	85	83	—	—	—	48
A 70 3_96.2	96.2	5.4	8.2	8.2	9.4	9.4	24	84	82	—	—	—	47
A 70 3_104.2	104.2	5.4	8.2	8.1	9.4	9.4	24	84	81	—	—	—	47
A 70 3_120.6	120.6	3.4	6.2	6.2	7.5	7.5	22	82	79	—	—	—	45
A 70 3_130.7	130.7	3.4	6.2	6.2	7.4	7.4	22	82	79	—	—	—	45
A 70 3_141.9	141.9	2.4	5.3	5.2	6.5	6.5	21	81	78	—	—	—	44
A 70 3_153.7	153.7	2.4	5.2	5.2	6.5	6.5	21	81	78	—	—	—	44

Im Hinblick auf die Trägheitsmomente der 4-stufigen Getriebe verweisen wir auf unseren Technischen Dienst.

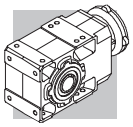

A 80

	i	J (•10-4) [kgm2]											
			IEC										
			80	90	100	112	132	160	180	200	225	250	
A 80 3_9.8	9.8	—	—	—	—	—	—	—	320	333	611	—	286
A 80 3_10.7	10.7	—	—	—	—	—	—	—	309	323	601	—	276
A 80 3_12.3	12.3	—	—	—	—	—	—	239	239	253	531	—	205
A 80 3_13.3	13.3	—	—	—	—	—	—	232	233	246	524	—	199
A 80 3_15.5	15.5	—	—	—	—	—	—	187	185	194	478	—	150
A 80 3_16.7	16.7	—	—	—	—	—	—	183	180	190	474	—	150
A 80 3_19.3	19.3	69	—	—	—	—	88	147	145	154	440	—	111
A 80 3_20.9	20.9	66	—	—	—	—	85	145	142	152	437	—	108
A 80 3_22.6	22.6	—	—	—	—	—	—	—	205	219	496	—	171
A 80 3_24.5	24.5	—	—	—	—	—	—	—	203	217	494	—	169
A 80 3_28.2	28.2	—	—	—	—	—	—	165	166	179	457	—	132
A 80 3_30.6	30.6	—	—	—	—	—	—	164	164	178	456	—	130
A 80 3_35.5	35.5	—	—	—	—	—	—	140	138	147	432	—	104
A 80 3_38.5	38.5	—	—	—	—	—	—	140	137	147	431	—	103
A 80 3_44.5	44.5	39	—	—	—	—	58	118	115	125	410	—	81
A 80 3_48.2	48.2	39	—	—	—	—	58	117	115	124	410	—	90
A 80 3_55.2	55.2	29	—	—	—	—	48	108	105	136	399	—	70
A 80 3_59.8	59.8	29	—	—	—	—	48	107	105	136	399	—	70
A 80 3_66.8	66.8	22	—	—	—	—	41	101	98	128	391	—	63
A 80 3_72.4	72.4	22	—	—	—	—	41	100	98	128	391	—	63
A 80 3_82.3	82.3	15	17	17	18	18	34	94	91	120	384	—	56
A 80 3_89.2	89.2	15	17	17	18	18	34	93	91	120	386	—	56
A 80 3_96.0	96.0	14	16	16	17	17	32	92	90	119	382	—	55
A 80 3_104.0	104.0	13	16	16	17	17	32	92	89	119	382	—	55
A 80 3_116.0	116.0	9.1	12	12	13	13	28	87	85	—	—	—	50
A 80 3_125.6	125.6	9.1	12	12	13	13	28	87	85	—	—	—	50
A 80 3_144.7	144.7	5.4	8.3	8.2	10	10	24	84	82	—	—	—	47
A 80 3_156.8	156.8	5.4	3.0	2.9	4.2	4.2	19	78	76	—	—	—	41

Im Hinblick auf die Trägheitsmomente der 4-stufigen Getriebe verweisen wir auf unseren Technischen Dienst.

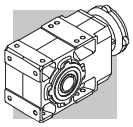

A 90

	i	J (•10-4) [kgm2]											
			IEC										
			80	90	100	112	132	160	180	200	225	250	
A 90 3_9.7	9.7	—	—	—	—	—	—	—	597	611	889	918	898
A 90 3_10.5	10.5	—	—	—	—	—	—	—	575	589	867	896	876
A 90 3_12.6	12.6	—	—	—	—	—	—	—	402	416	693	723	703
A 90 3_13.7	13.7	—	—	—	—	—	—	—	389	403	681	710	690
A 90 3_15.6	15.6	—	—	—	—	—	—	—	306	319	597	627	607
A 90 3_16.9	16.9	—	—	—	—	—	—	—	297	311	589	618	598
A 90 3_19.4	19.4	—	—	—	—	—	—	236	234	243	527	559	530
A 90 3_21.0	21.0	—	—	—	—	—	—	231	228	238	522	553	524
A 90 3_22.3	22.3	—	—	—	—	—	—	—	326	340	618	647	627
A 90 3_24.1	24.1	—	—	—	—	—	—	—	322	336	614	643	623
A 90 3_29.1	29.1	—	—	—	—	—	—	—	243	257	535	564	544
A 90 3_31.5	31.5	—	—	—	—	—	—	—	241	254	532	562	542
A 90 3_35.8	35.8	—	—	—	—	—	—	—	201	215	493	522	502
A 90 3_38.8	38.8	—	—	—	—	—	—	—	200	213	491	521	500
A 90 3_44.6	44.6	—	—	—	—	—	—	169	166	176	460	491	462
A 90 3_48.3	48.3	—	—	—	—	—	—	168	165	175	459	490	461
A 90 3_55.0	55.0	66	—	—	—	—	85	144	142	151	437	468	438
A 90 3_59.6	59.6	66	—	—	—	—	84	144	141	151	436	468	437
A 90 3_68.8	68.8	48	—	—	—	—	67	126	124	154	418	449	416
A 90 3_74.5	74.5	47	—	—	—	—	66	126	123	154	417	449	416
A 90 3_80.4	80.4	43	—	—	—	—	62	121	119	149	412	443	412
A 90 3_87.1	87.1	43	—	—	—	—	62	121	119	148	412	443	412
A 90 3_98.6	98.6	28	30	30	32	32	47	106	104	134	397	428	399
A 90 3_106.8	106.8	28	30	30	31	31	47	106	104	133	397	428	399
A 90 3_116.9	116.9	23	25	25	26	26	41	101	99	128	391	423	394
A 90 3_126.6	126.6	22	25	25	26	26	41	101	98	128	391	422	394
A 90 3_139.4	139.4	15	17	17	19	19	33	93	91	—	—	—	386
A 90 3_151.0	151.0	14	3.0	3.0	4.3	4.3	19	79	76	—	—	—	372

Im Hinblick auf die Trägheitsmomente der 4-stufigen Getriebe verweisen wir auf unseren Technischen Dienst.

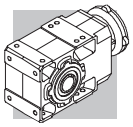

43 EXAKTE ÜBERSETZUNG

i_N	A 05	A 10	A 20	A 30	A 35	A 41	A 50	A 55	A 60	A 70	A 80	A 90
5.0								4.94505				
5.6	5.46559	5.46559	5.35117	5.41311	5.41311	5.24476						
6.3	6.33484	6.33484	6.53846	6.41026	6.41026			6.41026				
7.1	7.21154	7.21154	7.28745	7.02341	7.02341	7.12251						
8.0	8.51648	8.51648	8.37104	8.46154	8.46154	8.33333	7.73684	8.46154	7.86420			
9.0	9.61538	9.61538	9.37500	9.31174	9.31174	9.19732				9.43946		9.67545
10.0	10.55639	10.55639	10.33540	10.45503	10.63348	10.12987	9.73401	10.35503	10.31579	10.22609	9.83278	10.48174
11.2				11.77885	11.77885	11.74089				12.08027	10.65217	12.64214
12.5	12.30769	12.30769	11.96581		13.06878		13.10700	13.07692	12.70370	13.08696	12.27130	13.69565
14.0	13.92857	13.92857	14.07519	13.56522	15.47619	13.75661				15.40468	13.29391	15.57512
16.0	16.44898	16.44898	16.16807	16.34286	16.95652	16.09524	16.57005	15.68047	16.73663	16.68841	15.45151	16.87304
18.0	18.57143	18.57143	18.10714	17.98496		17.76398					19.33779	19.38462
20.0	21.35714	21.35714	21.22449	20.53782	20.42857		20.91813	19.23077	20.5942	19.66555	20.94928	21.00000
22.4	23.77143	23.77143	23.11111	22.75000	22.48120	22.67669				21.30435	22.61538	22.25354
25.0	25.46939	25.46939	26.46429	26.53061	25.67227		24.04795	23.79021	25.71012	23.52000	24.50000	24.10800
28.0	28.57143	28.57143	29.21905	29.30159	28.43750	28.32143	26.43733		27.85263	27.78462	28.22400	29.07692
31.5	32.19048	32.19048	31.30612	33.42857	33.16327		32.38095	29.93134	31.66154	30.10000	30.57600	31.50000
35.5	35.11688	35.11688	35.42857	36.64762	36.62698	35.90476	35.59829		34.30000	35.43077	35.53846	35.82277
40.0	40.85714	40.85714	39.61905	39.26531	41.78571	45.06667	40.93645	40.30303	41.71282	38.38333	38.50000	38.80800
45.0	45.39683	45.39683	43.22078	43.42857	45.80952	48.28571	45.00386		45.18889	45.23077	44.47692	44.58462
50.0	51.25714	51.25714	48.28571	48.28571	49.08163	53.14286	51.67843	50.95166	51.32709	49.00000	48.18333	48.30000
56.0	58.60317	58.60317	53.65079	52.67532	54.28571	58.80952	56.81314		55.60435	53.23314	55.18154	55.03077
63.0	65.92857	65.92857	63.14286	59.42857	60.35714	64.15584	63.89011	64.32168	64.98947	66.94154	66.80237	59.61667
71.0			70.98413	66.03175	65.84416	71.31429	70.23817		70.40526	72.52000	72.36923	68.75077
80.0	76.40816	76.40816	79.85714	76.51429	74.28571	79.23810	81.45055	79.52098	79.71923	79.32781	82.32000	80.37160
90.0	91.61905	91.61905	92.32653	86.66667	82.53968	92.76828	89.54339		86.36250	85.93846	89.18000	87.06923
100.0				97.50000	95.64286		99.53407	101.37762	99.50769	96.21818	104.03077	98.60308
112.2			109.16518	109.07029	105.54155	115.86039	109.42367	123.88531	107.80000	104.23636	115.95524	116.90414
125.0			120.52857	120.46208	116.90972		129.67046	132.73427	123.02769	120.61538	125.61818	126.64615
140.0			146.14286	137.42857	136.33787	146.88312	140.61938	146.80796	144.04260	141.86014	144.73846	139.39301
160.0			163.42857	161.42404	150.57760		154.59118	160.43706	171.46573	169.75499	156.80000	166.12694
180.0			178.28571	178.53968	171.78571	184.36364	173.36264	175.02225	185.75455	183.90123	171.29752	179.97085
200.0			199.17857	198.50794	201.78005	197.53247	190.58777	194.19860	208.73017		214.73193	209.01044
225.0			221.30952	216.55411	223.17460	217.40260	231.98700	208.05260	226.12435	220.25418	232.62626	226.42797
250.0			260.46429	244.31746	248.13492	240.58442	260.88462		264.29053	238.60870		
280.0			292.80952	271.46384	270.69264	291.74026	286.80584	262.64685	286.31474	292.01619	277.28428	281.43590
315.0			329.41071	314.55873	305.39683	324.15584	332.58974		324.19154	316.35088	300.39130	304.88889
355.0				356.29630	339.32981	376.83117	365.63552	324.71066	351.20750	369.38462	353.96864	355.79521
400.0			380.84694	400.83333	393.19841		406.43077		404.66462	400.16667	383.46603	385.44482
450.0							446.81331	413.95862	438.38667	475.76068	442.07937	449.15802
500.0							481.63314	505.86503	500.31262	515.40741	478.91932	486.58785
560.0							574.19580	541.99825	585.77325	595.03590	560.45035	555.29467
630.0							631.24731	655.11801	634.58769	644.62222	607.15455	601.56923
710.0							707.89744	714.67419	697.29399	705.13609	703.46182	707.91953
800.0							778.23340	792.97762	755.40182	855.27273	829.52598	766.91282
900.0										926.54545	898.65315	865.09065
1000.0										1072.13675	1001.43166	1025.1594
1125.0										1161.48148	1084.88430	1110.58935
1250.0										1242.33846	1236.85594	1222.17967
1400.0										1345.86667	1339.92727	1324.02797
1600.0										1583.07692	1557.66545	1506.76450
1800.0										1715.00000		1632.32821

2x 3x 4x

A 05...M/ME

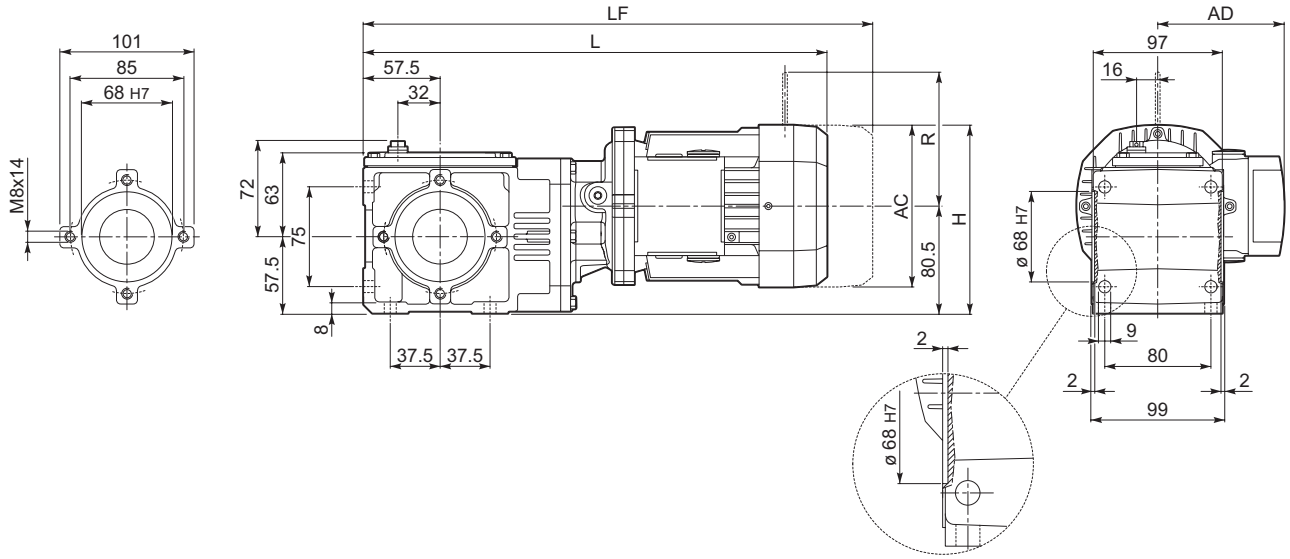

								M...FD M...FA		M...FD		M...FA	
			AC	H	L	AD	Kg	LF	Kg	R	AD	R	AD
A 05 2	**S05**	**M05**	121	141	360.5	95	7.5	426.5	9	96	122	116	95
A 05 2	**S1**	**M1**	138	149.5	389.5	108	11.5	450.5	14	103	135	124	108
A 05 2	**S2**	**ME2S**	156	158.5	418.5	119	15.5	—	—	—	—	—	—

A 05...P(IEC)

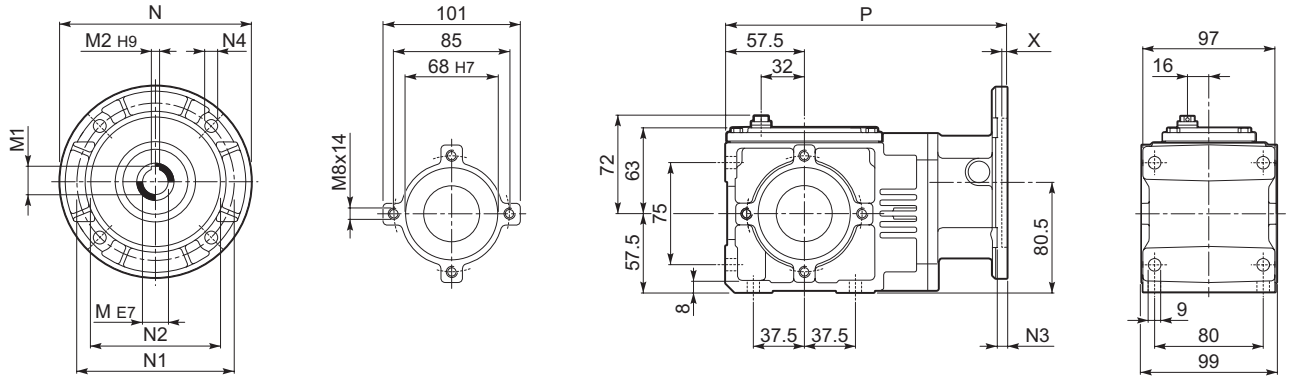

		M	M1	M2	N	N1	N2	N3	N4	X	P	Kg
A 05 2	**P63**	11	12.8	4	140	115	95	7	9.5	3.5	206	5
A 05 2	**P71**	14	16.3	5	160	130	110	7	9.5	4	213	5
A 05 2	**P80**	19	20.8	6	200	165	130	7	11.5	4	223	5.5

Verkleinerte Feder, gelieferte von Bonfiglioli.

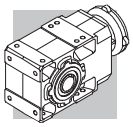

A 05...SK / SC

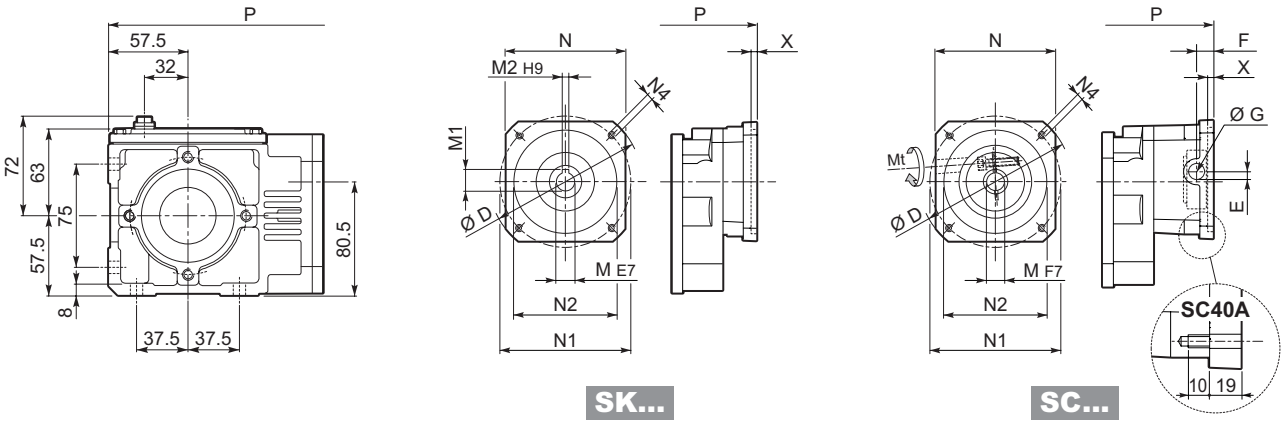

		D	M	M1	M2	N	N1	N2	N4	X	P	Kg
A 05 2	**SK40A**	74	9	10.4	3	55	63	40	M5x10	3	207.5	5
A 05 2	**SK60A**	102	11	12.8	4	82	75	60	M5x10	3.5	206	5
A 05 2	**SK60B**	102	14	16.3	5	82	75	60	M5x10	4	213	5
A 05 2	**SK80A**	115	14	16.3	5	90	100	80	M6x12	4	213	5

			Mt [Nm]	D	E	F	G	M	N	N1	N2	N4	X	P	Kg
A 05 2	**SC40A**	M5	15	74	10.5	9.5	12.5	9	55	63	40	M5x10	3	226.5	6
A 05 2	**SC60A**	M6	15	102	7	12.5	12.5	11	82	75	60	M5x10	4	233	6
A 05 2	**SC60B**	M6	15	102	7	12.5	12.5	14	82	75	60	M5x10	4	233	6
A 05 2	**SC80A**	M6	15	115	6	12.5	12.5	14	90	100	80	M6x12	4	233	6

A 05...F...

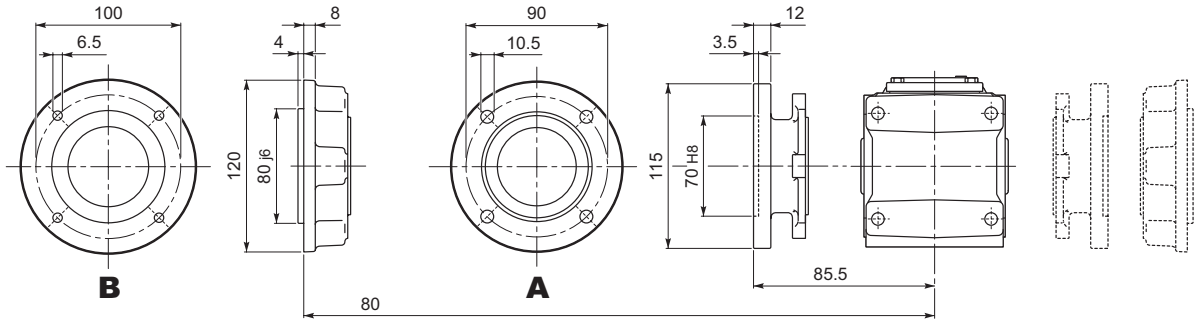

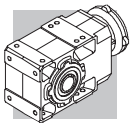

A 05

A 05...UH

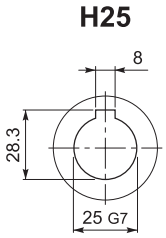

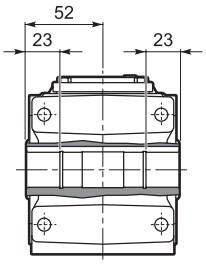

A 05...US

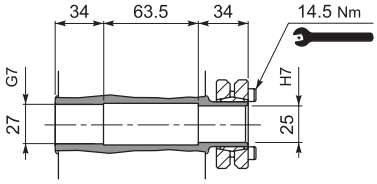

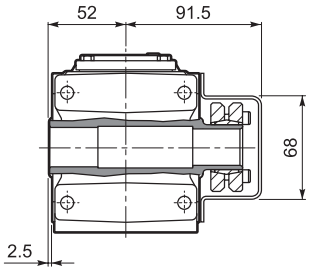

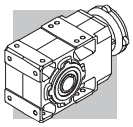

A 10...M/ME

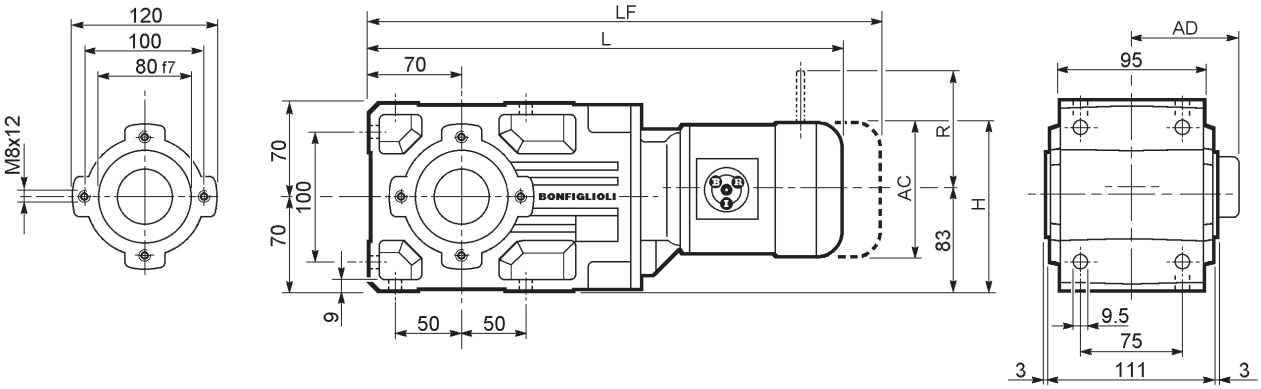

								M...FD M...FA		M...FD		M...FA	
			AC	H	L	AD	Kg	LF	Kg	R	AD	R	AD
A 10 2	**S05**	**M05**	121	143.5	408.5	95	12	474.5	14	96	122	116	95
A 10 2	**S1**	**M1**	138	152	437.5	108	14	498.5	17	103	135	124	108
A 10 2	**S2**	**ME2S**	156	161	466.5	119	18	—	—	—	—	—	—
A 10 2	**S3**	**ME3S**	195	180.5	509.5	142	24.5	—	—	—	—	—	—
A 10 2	**S3**	**ME3L**	195	180.5	541.5	142	30	—	—	—	—	—	—

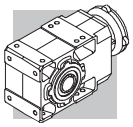

A 10...P(IEC)

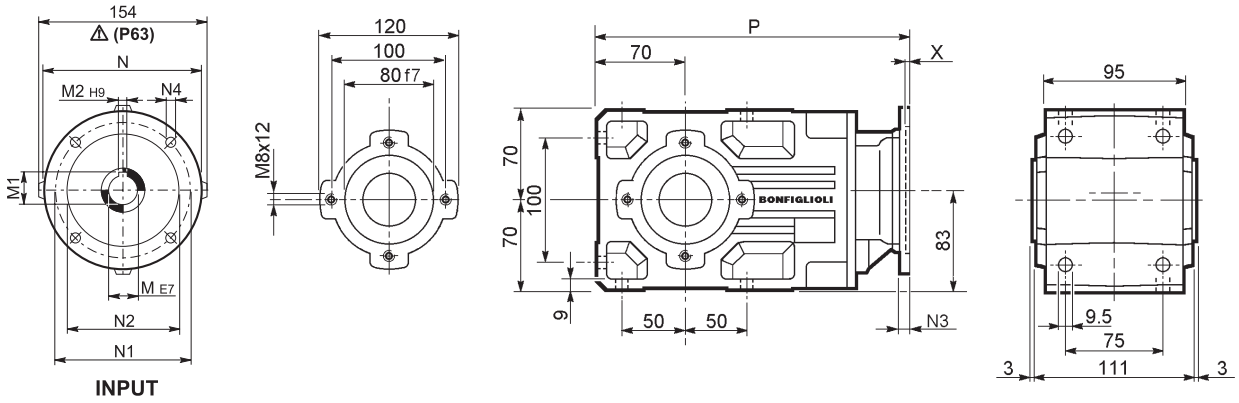

		M	M1	M2	N	N1	N2	N3	N4	X	P	Kg
A 10 2	**P63**	11	12.8	4	140	115	95	—	M8x10	4	282.5	8
A 10 2	**P71**	14	16.3	5	160	130	110	—	M8x10	4.5	282.5	9
A 10 2	**P80**	19	21.8	6	200	165	130	—	M10x12	4	302	9
A 10 2	**P90**	24	27.3	8	200	165	130	—	M10x12	4	302	9
A 10 2	**P100**	28	31.3	8	250	215	180	—	M12x16	4.5	312	13
A 10 2	**P112**	28	31.3	8	250	215	180	—	M12x16	4.5	312	13

A 10...HS

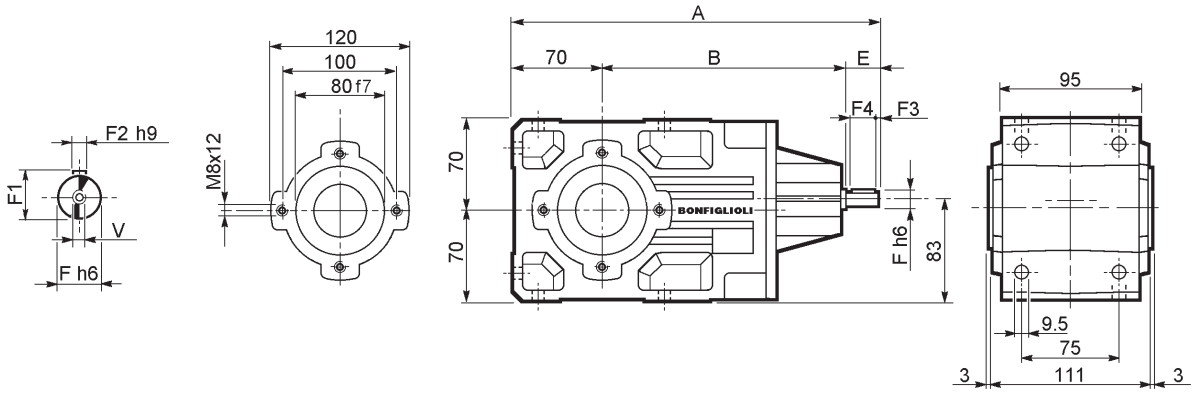

		A	B	E	F	F1	F2	F3	F4	V	Kg
A 10 2	**HS**	289.5	179.5	40	16	18	5	2.5	35	M6x16	7.8

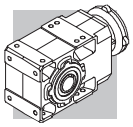

A 10...SK / SC

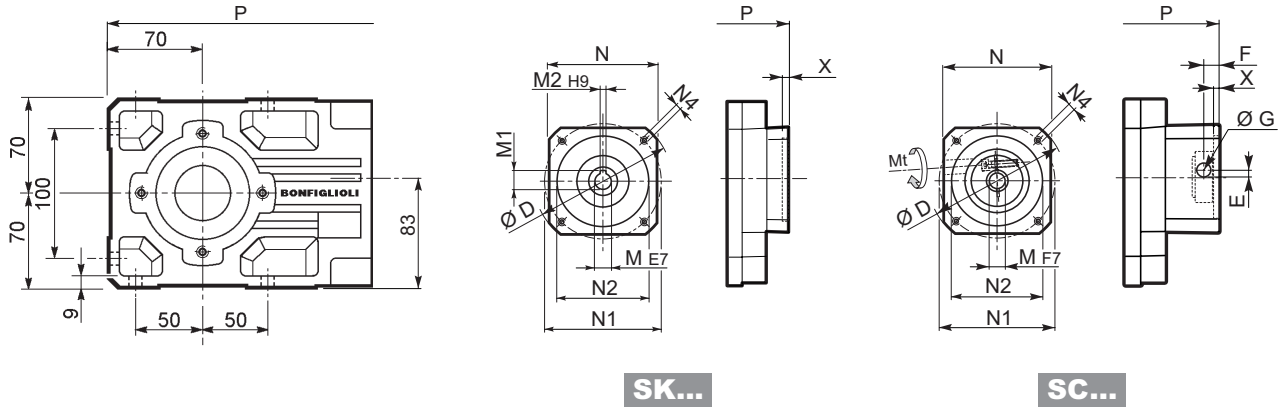

		D	M	M1	M2	N	N1	N2	N4	X	P	Kg
A 10 2	**SK60A**	102	11	12.8	4	82	75	60	M5x10	3.5	254	8
A 10 2	**SK60B**	102	14	16.3	5	82	75	60	M5x10	4	261	8
A 10 2	**SK80A**	115	14	16.3	5	90	100	80	M6x12	4	261	8
A 10 2	**SK80C**	120	19	21.8	6	96	100	80	M6x12	4	302	9
A 10 2	**SK95A**	130	14	16.3	5	102	115	95	M8x12	4	302	9
A 10 2	**SK95B**	130	19	21.8	6	102	115	95	M8x12	4	302	9
A 10 2	**SK95C**	130	24	27.3	8	102	115	95	M8x12	4	302	9
A 10 2	**SK110A**	150	19	21.8	6	120	130	110	M8x12	5	302	9
A 10 2	**SK110B**	150	24	27.3	8	120	130	110	M8x12	5	302	9

			Mt [Nm]	D	E	F	G	M	N	N1	N2	N4	X	P	Kg
A 10 2	**SC60A**	M6	15	102	7	12.5	12.5	11	82	75	60	M5x10	4	281	9
A 10 2	**SC60B**	M6	15	102	7	12.5	12.5	14	82	75	60	M5x10	4	281	9
A 10 2	**SC80A**	M6	15	115	6	12.5	12.5	14	90	100	80	M6x12	4	281	9
A 10 2	**SC80C**	M6	15	120	15.5	14.5	17.75	19	96	100	80	M6x12	4	325.5	10
A 10 2	**SC95A**	M6	15	130	16.5	15	17.75	14	102	115	95	M8x16	4	325.5	10
A 10 2	**SC95B**	M6	15	130	16.5	15	17.75	19	102	115	95	M8x16	4	325.5	10
A 10 2	**SC95C**	M6	15	130	16.5	15	17.75	24	102	115	95	M8x16	4	325.5	10
A 10 2	**SC110A**	M6	15	150	16.5	16	17.75	19	120	130	110	M8x16	5	325.5	12
A 10 2	**SC110B**	M6	15	150	16.5	16	17.75	24	120	130	110	M8x16	5	325.5	12

A 10...F...

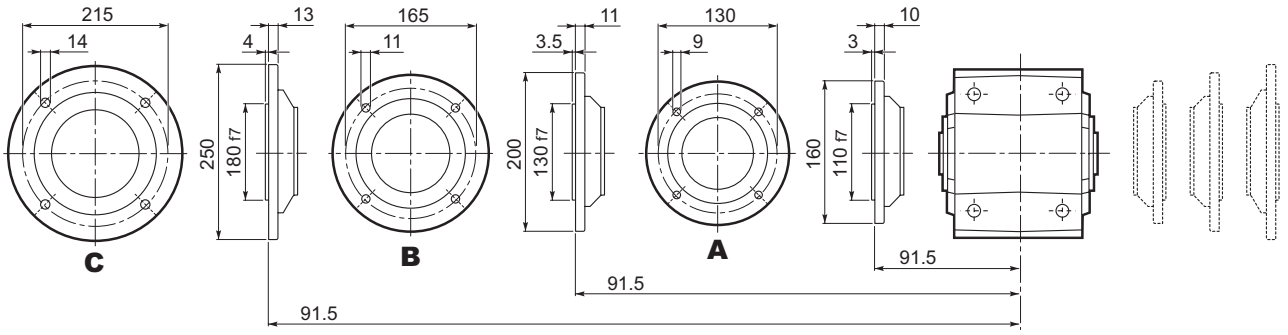

Bonfiglioli Riduttori

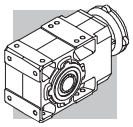

A 10

A 10...UR

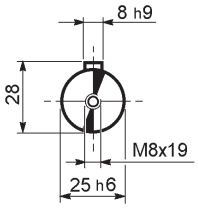

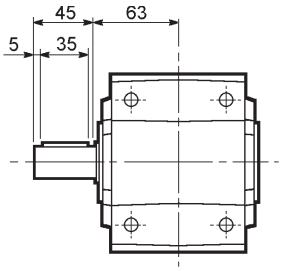

A 10...UD

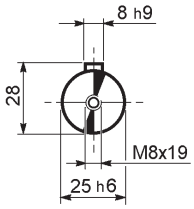

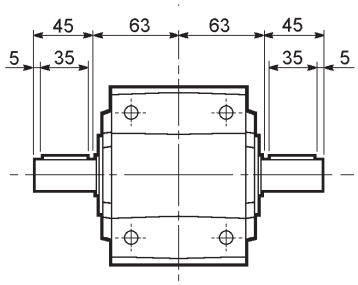

A 10...UH

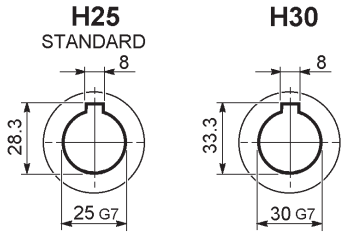

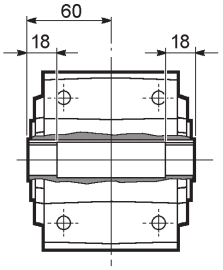

A 10...US

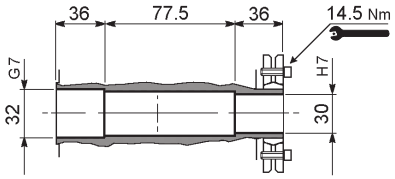

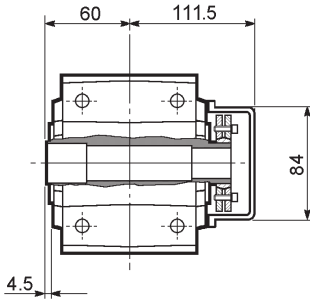

A 10...QF

	Ø
QF25	25
QF30	30

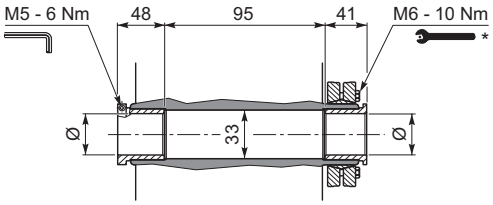

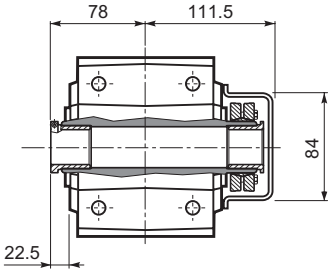

* Befolgen Sie die MONTAGEANLEITUNG die dem Getriebe beiliegt.

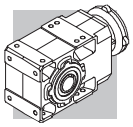

A 20...M/ME

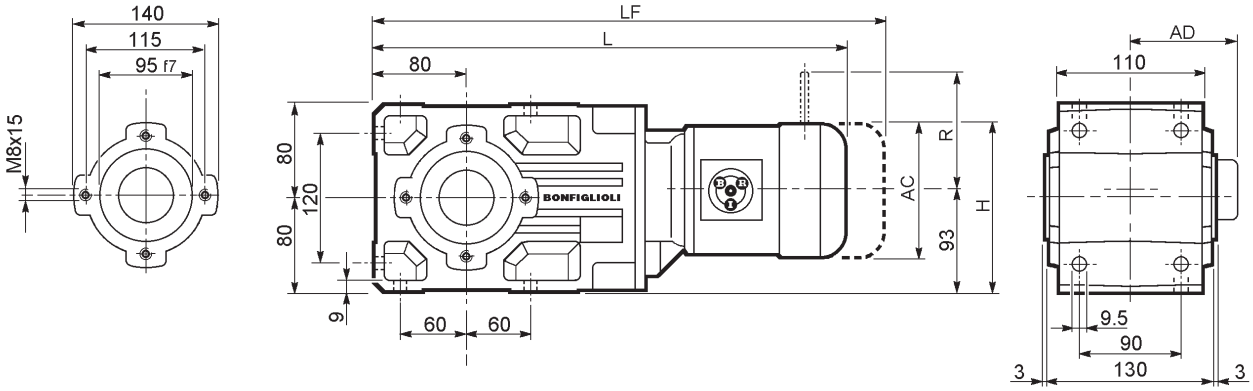

								M...FD M...FA		M...FD		M...FA	
			AC	H	L	AD	Kg	LF	Kg	R	AD	R	AD
A 20 2	**S05**	**M05**	121	143.5	432	95	16	498	18	96	122	116	95
A 20 2	**S1**	**M1**	138	152	461	108	18	522	21	103	135	124	108
A 20 2	**S2**	**ME2S**	156	161	490	119	22	—	—	—	—	—	—
A 20 2	**S3**	**ME3S**	195	180.5	533	142	28.5	—	—	—	—	—	—
A 20 2	**S3**	**ME3L**	195	180.5	565	142	34	—	—	—	—	—	—
A 20 3	**S05**	**M05**	121	143.5	457.5	95	16	553.5	18	96	122	116	95
A 20 3	**S1**	**M1**	138	152	486.5	108	19	577.5	21	103	135	124	108
A 20 3	**S2**	**ME2S**	156	161	545.5	119	23	—	—	—	—	—	—
A 20 3	**S3**	**ME3S**	195	180.5	588.5	142	29.5	—	—	—	—	—	—
A 20 3	**S3**	**ME3L**	195	180.5	620.5	142	35	—	—	—	—	—	—

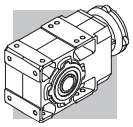

A 20...P(IEC)

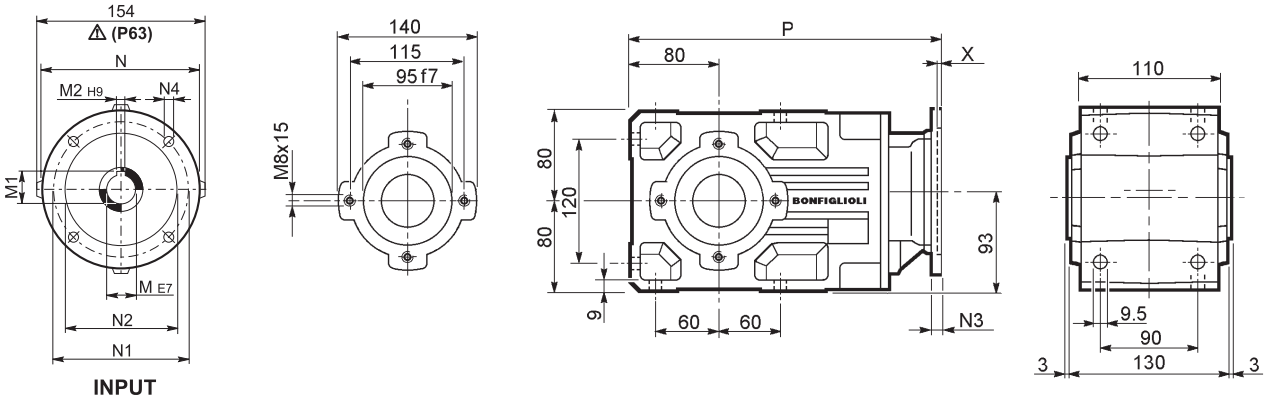

		M	M1	M2	N	N1	N2	N3	N4	X	P	Kg
A 20 2	**P63**	11	12.8	4	140	115	95	—	M8x19	4	306	12
A 20 2	**P71**	14	16.3	5	160	130	110	—	M8x16	4.5	306	12
A 20 2	**P80**	19	21.8	6	200	165	130	—	M10x12	4	325.5	13
A 20 2	**P90**	24	27.3	8	200	165	130	—	M10x12	4	325.5	13
A 20 2	**P100**	28	31.3	8	250	215	180	—	M12x16	4.5	335.5	17
A 20 2	**P112**	28	31.3	8	250	215	180	—	M12x16	4.5	335.5	17
A 20 3	**P63**	11	12.8	4	140	115	95	—	M8x19	4	361.5	13
A 20 3	**P71**	14	16.3	5	160	130	110	—	M8x16	4.5	361.5	13
A 20 3	**P80**	19	21.8	6	200	165	130	—	M10x12	4	381	14
A 20 3	**P90**	24	27.3	8	200	165	130	—	M10x12	4	381	14
A 20 3	**P100**	28	31.3	8	250	215	180	—	M12x16	4.5	391	18
A 20 3	**P112**	28	31.3	8	250	215	180	—	M12x16	4.5	391	18

A 20...HS

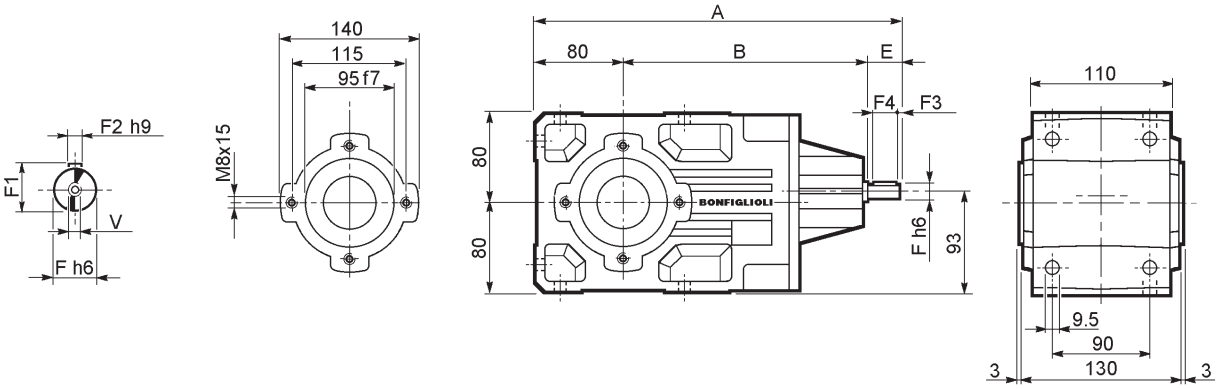

		A	B	E	F	F1	F2	F3	F4	V	Kg
A 20 2	**HS**	356	236	40	19	21.5	6	2.5	35	M6x16	11.9
A 20 3		368.5	248.5	40	16	18	5	2.5	35	M6x16	12.2

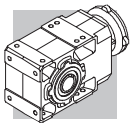

A 20...SK / SC

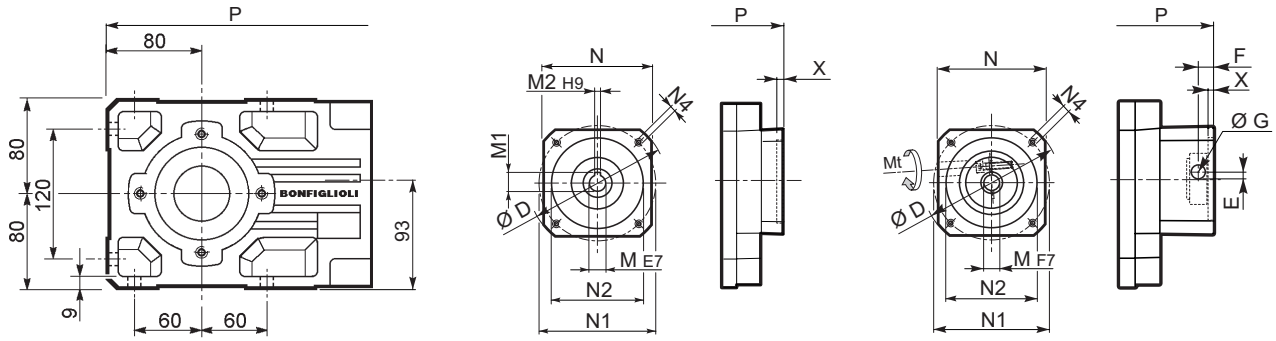

SK...

SC...

		D	M	M1	M2	N	N1	N2	N4	X	P 2x	P 3x	Kg
A 20 2/3	SK60A	102	11	12.8	4	82	75	60	M5x10	3.5	277.5	333	11/12
A 20 2/3	SK60B	102	14	16.3	5	82	75	60	M5x10	4	284.5	340	12/13
A 20 2/3	SK80A	115	14	16.3	5	90	100	80	M6x12	4	284.5	340	12/13
A 20 2/3	SK80C	120	19	21.8	6	96	100	80	M6x12	4	325.5	381	13/14
A 20 2/3	SK95A	130	14	16.3	5	102	115	95	M8x12	4	325.5	381	13/14
A 20 2/3	SK95B	130	19	21.8	6	102	115	95	M8x12	4	325.5	381	13/14
A 20 2/3	SK95C	130	24	27.3	8	102	115	95	M8x12	4	325.5	381	13/14
A 20 2/3	SK110A	150	19	21.8	6	120	130	110	M8x12	5	325.5	381	13/14
A 20 2/3	SK110B	150	24	27.3	8	120	130	110	M8x12	5	325.5	381	13/14

			Mt [Nm]	D	E	F	G	M	N	N1	N2	N4	X	P 2x	P 3x	Kg
A 20 2/3	SC60A	M6	15	102	7	12.5	12.5	11	82	75	60	M5x10	4	304.5	360	12/13
A 20 2/3	SC60B	M6	15	102	7	12.5	12.5	14	82	75	60	M5x10	4	304.5	360	13/14
A 20 2/3	SC80A	M6	15	115	6	12.5	12.5	14	90	100	80	M6x12	4	304.5	360	13/14
A 20 2/3	SC80C	M6	15	120	15.5	14.5	17.75	19	96	100	80	M6x12	4	349	404.5	14/15
A 20 2/3	SC95A	M6	15	130	16.5	15	17.75	14	102	115	95	M8x16	4	349	404.5	14/15
A 20 2/3	SC95B	M6	15	130	16.5	15	17.75	19	102	115	95	M8x16	4	349	404.5	14/15
A 20 2/3	SC95C	M6	15	130	16.5	15	17.75	24	102	115	95	M8x16	4	349	404.5	14/15
A 20 2/3	SC110A	M6	15	150	16.5	16	17.75	19	120	130	110	M8x16	5	349	404.5	15/16
A 20 2/3	SC110B	M6	15	150	16.5	16	17.75	24	120	130	110	M8x16	5	349	404.5	15/16

A 20...F...

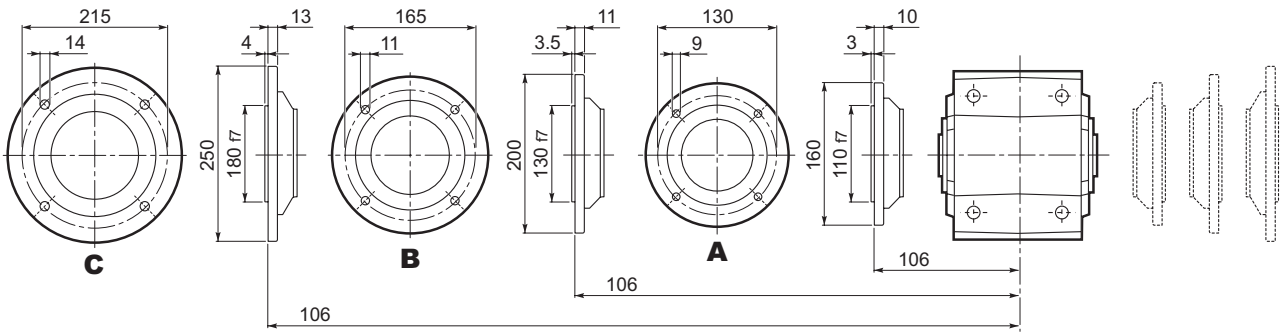

Bonfiglioli Riduttori

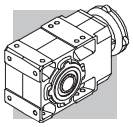

A 20

A 20...UR

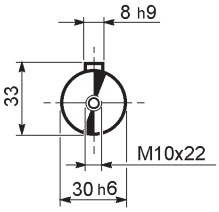

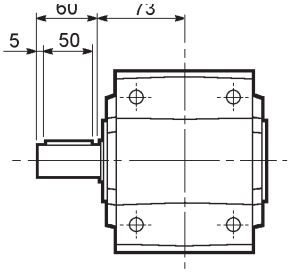

A 20...UD

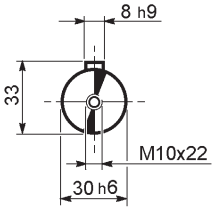

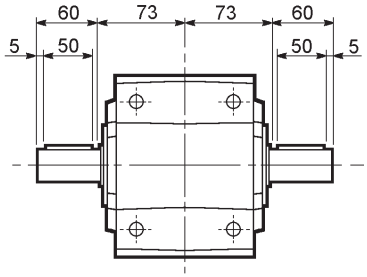

A 20...UH

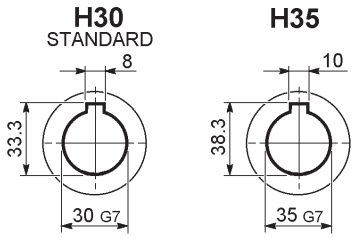

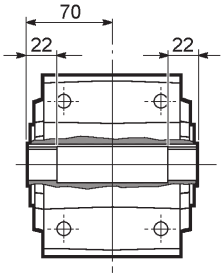

A 20...US

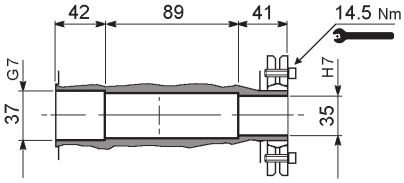

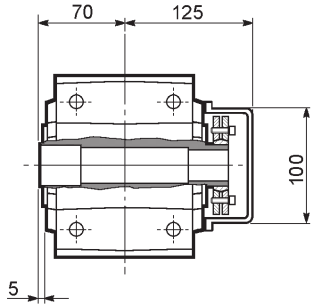

A 20...QF

	Ø
QF25	25
QF30	30

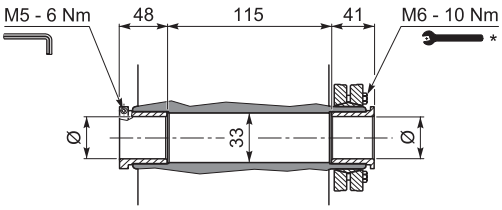

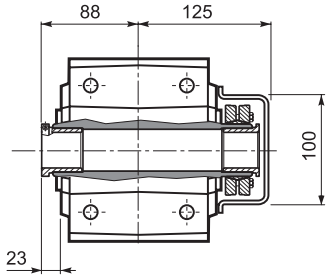

A 20...UV

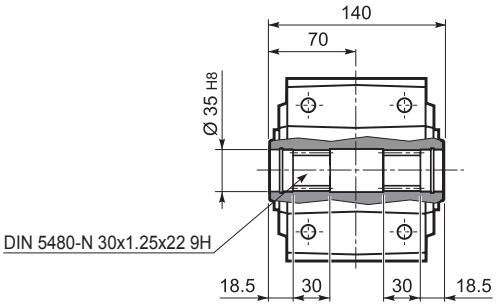

* Befolgen Sie die MONTAGEANLEITUNG die dem Getriebe beiliegt.

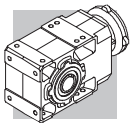

A 30...M/ME

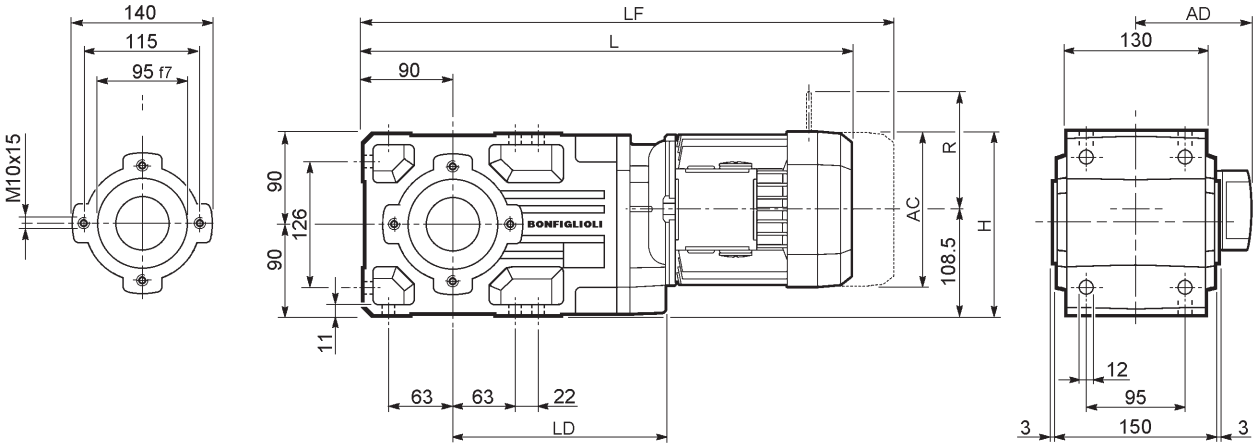

									M...FD M...FA		M...FD		M...FA	
			AC	H	L	LD	AD	Kg	LF	Kg	R	AD	R	AD
A 30 2	**S1**	**M1**	138	177.5	488	201	108	22	549	24	103	135	124	108
A 30 2	**S2**	**ME2S**	156	186.5	517	213	119	25	—	—	—	—	—	—
A 30 2	**S3**	**ME3S**	195	206	560	223	142	31.5	—	—	—	—	—	—
A 30 2	**S3**	**ME3L**	195	206	592	223	142	38	—	—	—	—	—	—
A 30 3	**S05**	**M05**	121	169	516.5	—	95	21	582.5	22	96	122	116	95
A 30 3	**S1**	**M1**	138	177.5	545.5	—	108	23	606.5	26	103	135	124	108
A 30 3	**S2**	**ME2S**	156	186.5	574.5	—	119	25	—	—	—	—	—	—
A 30 3	**S3**	**ME3S**	195	206	617.5	—	142	31.5	—	—	—	—	—	—
A 30 3	**S3**	**ME3L**	195	206	649.5	—	142	38	—	—	—	—	—	—

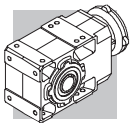

A 30...P(IEC)

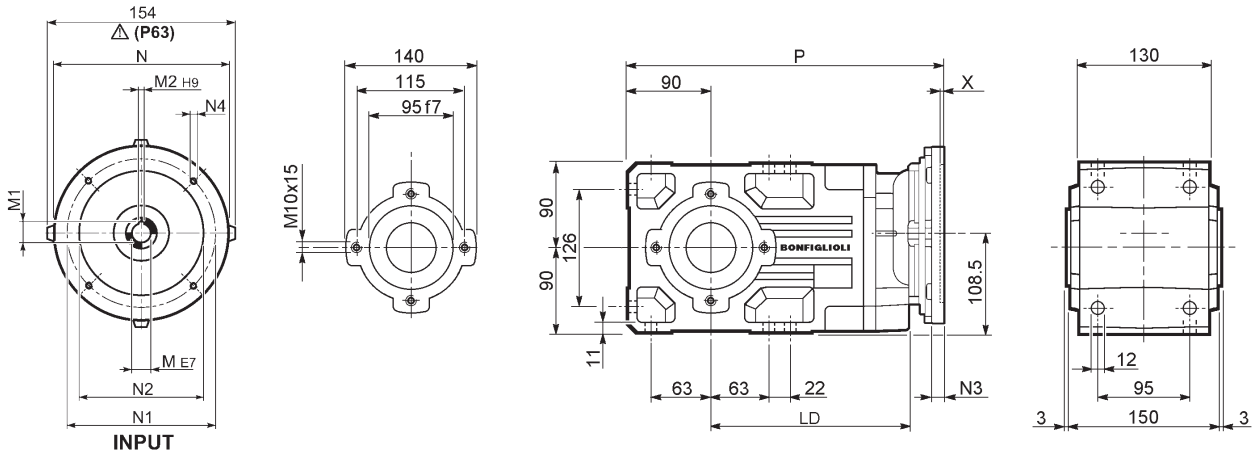

		LD	M	M1	M2	N	N1	N2	N3	N4	X	P	Kg
A 30 2	**P63**	213	11	12.8	4	140	115	95	—	M8x19	4	333	16
A 30 2	**P71**	213	14	16.3	5	160	130	110	—	M8x16	4.5	333	16
A 30 2	**P80**	223	19	21.8	6	200	165	130	—	M10x12	4	352.5	17
A 30 2	**P90**	223	24	27.3	8	200	165	130	—	M10x12	4	352.5	17
A 30 2	**P100**	223	28	31.3	8	250	215	180	—	M12x16	4.5	362.5	20
A 30 2	**P112**	223	28	31.3	8	250	215	180	—	M12x16	4.5	362.5	20
A 30 3	**P63**	—	11	12.8	4	140	115	95	—	M8x19	4	390.5	17
A 30 3	**P71**	—	14	16.3	5	160	130	110	—	M8x16	4.5	390.5	17
A 30 3	**P80**	—	19	21.8	6	200	165	130	—	M10x12	4	410	18
A 30 3	**P90**	—	24	27.3	8	200	165	130	—	M10x12	4	410	18
A 30 3	**P100**	—	28	31.3	8	250	215	180	—	M12x16	4.5	420	22
A 30 3	**P112**	—	28	31.3	8	250	215	180	—	M12x16	4.5	420	22

A 30...HS

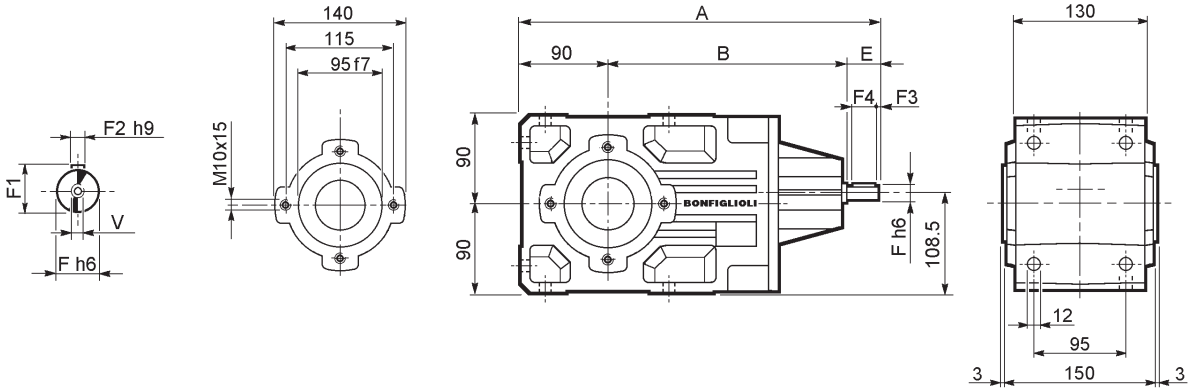

		A	B	E	F	F1	F2	F3	F4	V	Kg
A 30 2	**HS**	383	253	40	19	21.5	6	2.5	35	M6x16	16.7
A 30 3		397.5	267.5	40	16	18	5	2.5	35	M6x16	16.5

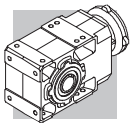

A 30...SK / SC

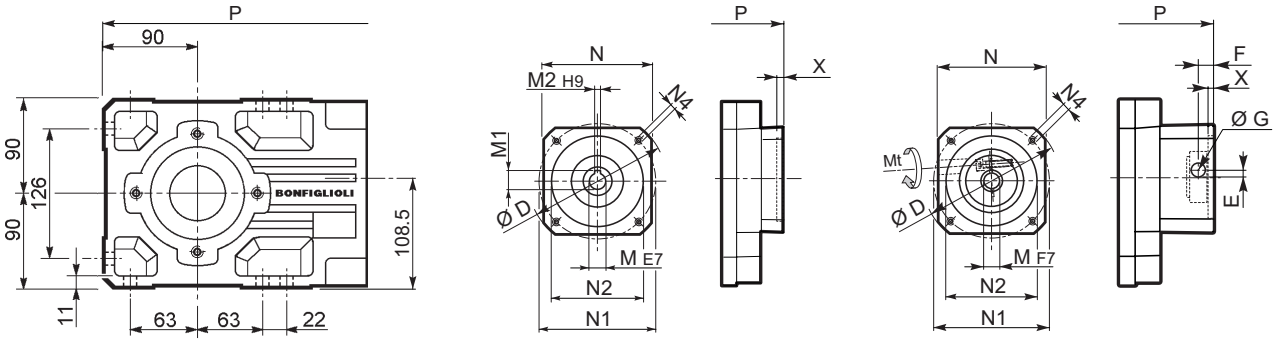

SK...

SC...

		D	M	M1	M2	N	N1	N2	N4	X	P 2x	P 3x	Kg
A 30 2/3	SK60A	102	11	12.8	4	82	75	60	M5x10	3.5	304.5	362	15/16
A 30 2/3	SK60B	102	14	16.3	5	82	75	60	M5x10	4	311.5	369	16/17
A 30 2/3	SK80A	115	14	16.3	5	90	100	80	M6x12	4	311.5	369	16/17
A 30 2/3	SK80C	120	19	21.8	6	96	100	80	M6x12	4	352.5	410	17/18
A 30 2/3	SK95A	130	14	16.3	5	102	115	95	M8x12	4	352.5	410	17/18
A 30 2/3	SK95B	130	19	21.8	6	102	115	95	M8x12	4	352.5	410	17/18
A 30 2/3	SK95C	130	24	27.3	8	102	115	95	M8x12	4	352.5	410	17/18
A 30 2/3	SK110A	150	19	21.8	6	120	130	110	M8x12	5	352.5	410	17/18
A 30 2/3	SK110B	150	24	27.3	8	120	130	110	M8x12	5	352.5	410	17/18
A 30 2	SK130A	188	24	27.3	8	142	165	130	M10x20	5	352.5	—	18

		Mt [Nm]	D	E	F	G	M	N	N1	N2	N4	X	P 2x	P 3x	Kg
A 30 2/3	SC60A	M6 15	102	7	12.5	12.5	11	82	75	60	M5x10	4	331.5	389	16/17
A 30 2/3	SC60B	M6 15	102	7	12.5	12.5	14	82	75	60	M5x10	4	331.5	389	17/18
A 30 2/3	SC80A	M6 15	115	6	12.5	12.5	14	90	100	80	M6x12	4	331.5	389	17/18
A 30 2/3	SC80C	M6 15	120	15.5	14.5	17.75	19	96	100	80	M6x12	4	376	433.5	18/19
A 30 2/3	SC95A	M6 15	130	16.5	15	17.75	14	102	115	95	M8x16	4	376	433.5	18/19
A 30 2/3	SC95B	M6 15	130	16.5	15	17.75	19	102	115	95	M8x16	4	376	433.5	18/19
A 30 2/3	SC95C	M6 15	130	16.5	15	17.75	24	102	115	95	M8x16	4	376	433.5	18/19
A 30 2/3	SC 110A	M6 15	150	16.5	16	17.75	19	120	130	110	M8x16	5	376	433.5	19/20
A 30 2/3	SC 110B	M6 15	150	16.5	16	17.75	24	120	130	110	M8x16	5	376	433.5	19/20
A 30 2	SC 130A	M6 15	188	19	16	17.75	24	142	165	130	M10x20	5	376	—	20

A 30...F...

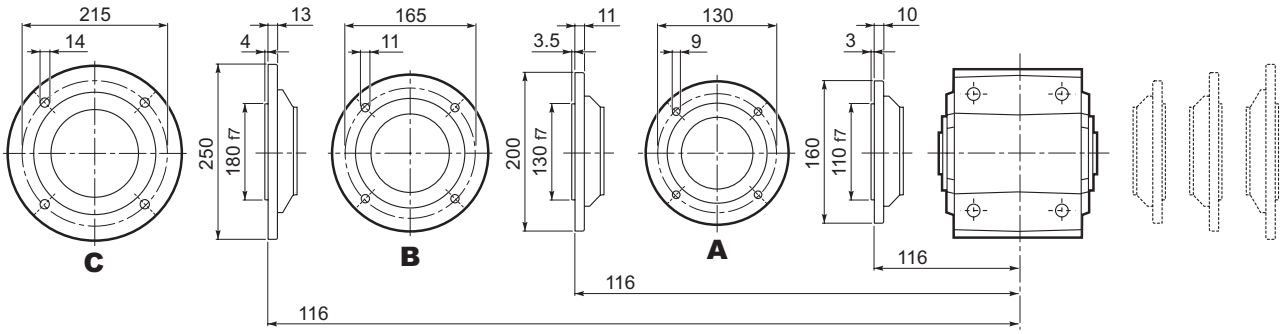

Bonfiglioli Riduttori

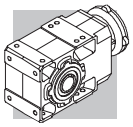

A 30

A 30...UR

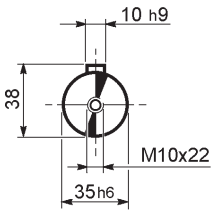

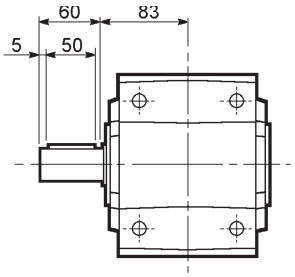

A 30...UD

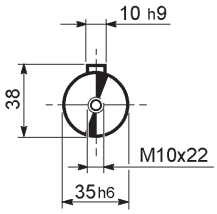

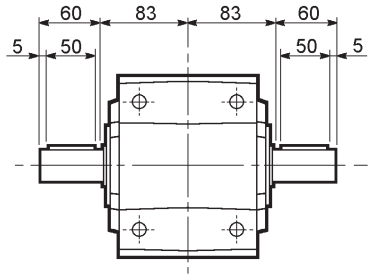

A 30...UH

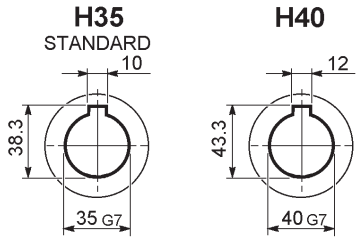

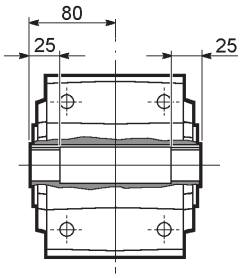

A 30...US

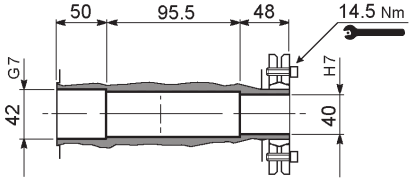

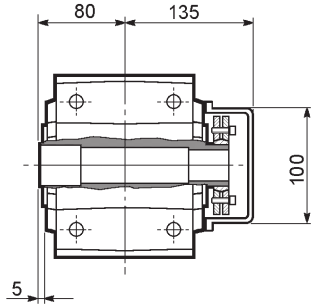

A 30...QF

	Ø
QF35	35
QF40	40

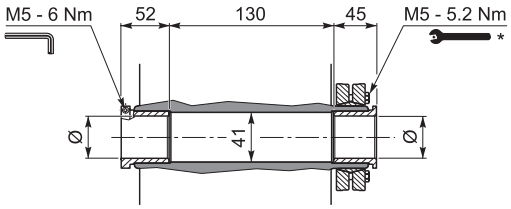

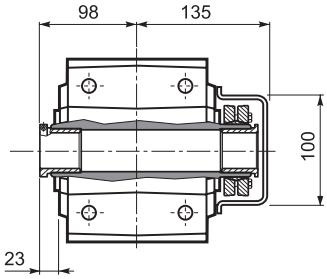

A 30...UV

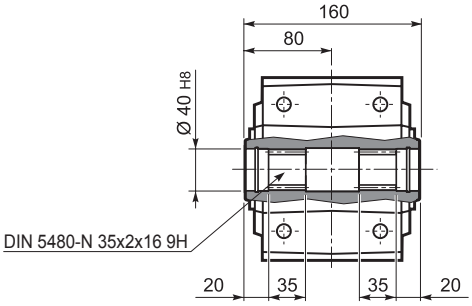

* Befolgen Sie die MONTAGEANLEITUNG die dem Getriebe beiliegt.

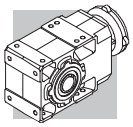

A 35...M/ME/MX

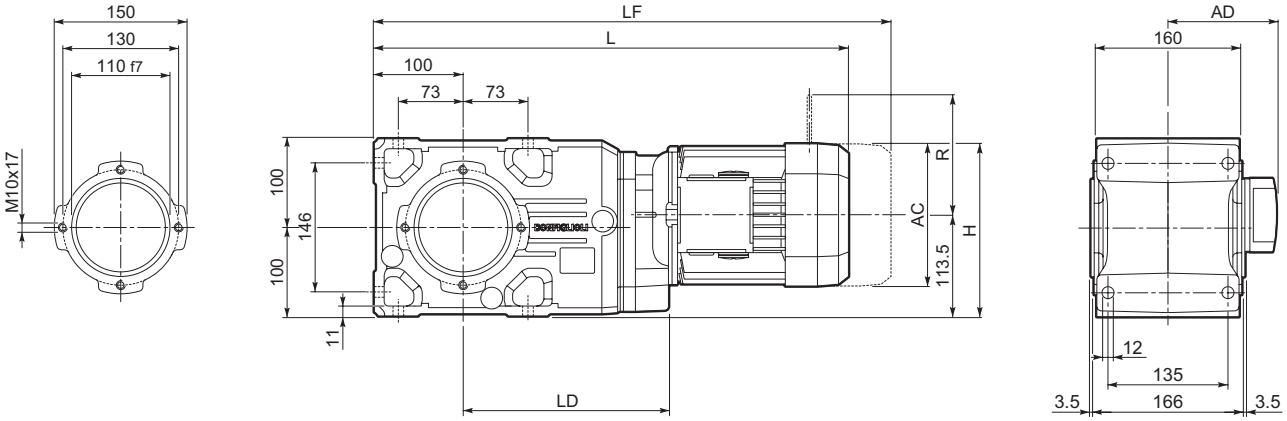

										M...FD M...FA		M...FD		M...FA	
				AC	H	L	LD	AD	Kg	LF	Kg	R	AD	R	AD
A 35 2	**S1**	**M1**		138	182.5	514.5	217.5	108	34	575.5	36	103	135	124	108
A 35 2	**S2**	**ME2S**		156	191.5	543.5	229.5	119	37	—	—	—	—	—	—
A 35 2	**S3**	**ME3S**		195	211	586.5	239.5	142	43.5	—	—	—	—	—	—
A 35 2	**S3**	**ME3L**		195	211	618.5	239.5	142	50	—	—	—	—	—	—
A 35 2	**S4**	**ME4**	**MX4**	258	242.5	726.5	—	193	89	—	—	—	—	—	—
A 35 2	**S4**	**ME4LB**	**MX4LA**	258	242.5	761.5	—	193	97	—	—	—	—	—	—
A 35 3	**S05**	**M05S**		121	174	543	—	95	33	609	34	96	122	116	95
A 35 3	**S1**	**M1**		138	182.5	572	—	108	35	633	38	103	135	124	108
A 35 3	**S2**	**ME2S**		156	191.5	601	—	119	37	—	—	—	—	—	—
A 35 3	**S3**	**ME3S**		195	211	644	—	142	43.5	—	—	—	—	—	—
A 35 3	**S3**	**ME3L**		195	211	676	—	142	50	—	—	—	—	—	—

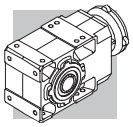

A 35...P(IEC)

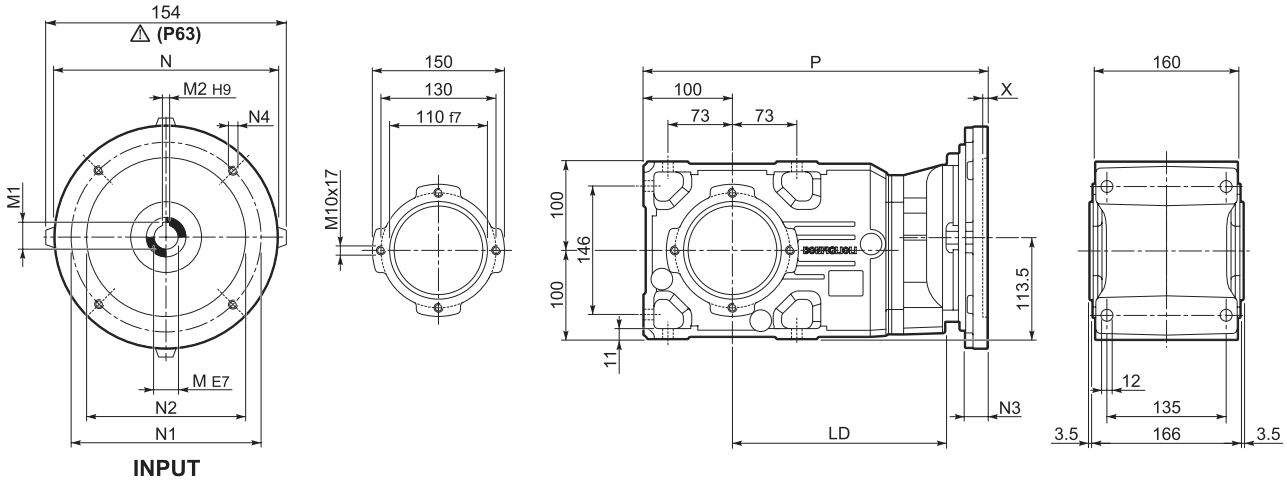

		LD	M	M1	M2	N	N1	N2	N3	N4	X	P	Kg
A 35 2	**P63**	229.5	11	12.8	4	140	115	95	—	M8x19	4	359.5	28
A 35 2	**P71**	229.5	14	16.3	5	160	130	110	—	M8x16	4.5	359.5	28
A 35 2	**P80**	239.5	19	21.8	6	200	165	130	—	M10x12	4	379	29
A 35 2	**P90**	239.5	24	27.3	8	200	165	130	—	M10x12	4	379	29
A 35 2	**P100**	239.5	28	31.3	8	250	215	180	—	M12x16	4.5	389	32
A 35 2	**P112**	239.5	28	31.3	8	250	215	180	—	M12x16	4.5	389	32
A 35 2	**P132**	—	38	41.3	10	300	265	230	16	14	5	425.5	40
A 35 3	**P63**	—	11	12.8	4	140	115	95	—	M8x19	4	417	29
A 35 3	**P71**	—	14	16.3	5	160	130	110	—	M8x16	4.5	417	29
A 35 3	**P80**	—	19	21.8	6	200	165	130	—	M10x12	4	436.5	30
A 35 3	**P90**	—	24	27.3	8	200	165	130	—	M10x12	4	436.5	30
A 35 3	**P100**	—	28	31.3	8	250	215	180	—	M12x16	4.5	446.5	34
A 35 3	**P112**	—	28	31.3	8	250	215	180	—	M12x16	4.5	446.5	34

A 35...HS

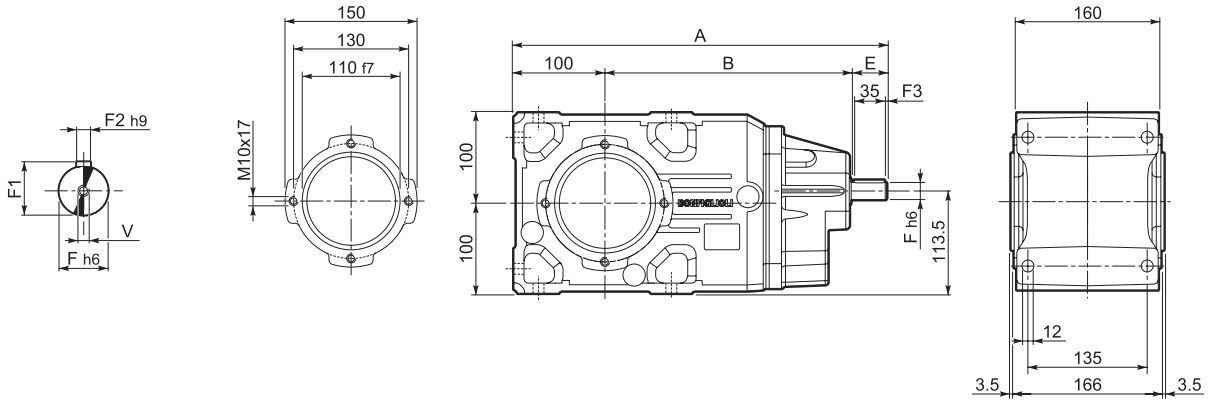

		A	B	E	F	F1	F2	F3	F4	V	Kg
A 35 2	**HS**	409.5	269.5	40	19	21.5	6	2.5	35	M6x16	29
A 35 3		424	284	40	16	18	5	2.5	35	M6x16	29

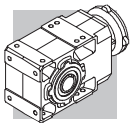

A 35...SK / SC

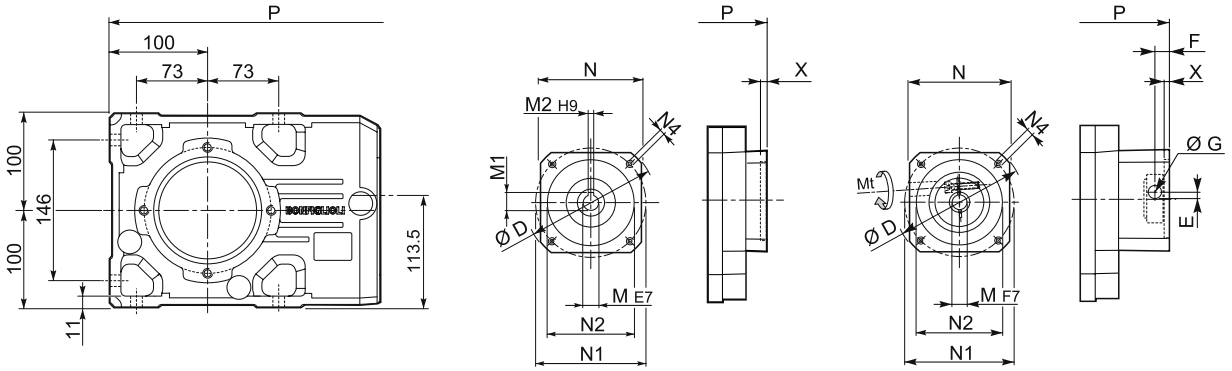

SK...

SC...

		D	M	M1	M2	N	N1	N2	N4	X	P 2x	P 3x	Kg
A 35 2/3	**SK60A**	102	11	12.8	4	82	75	60	M5x10	3.5	331	388.5	27/28
A 35 2/3	**SK60B**	102	14	16.3	5	82	75	60	M5x10	4	338	395.5	28/29
A 35 2/3	**SK80A**	115	14	16.3	5	90	100	80	M6x12	4	338	395.5	28/29
A 35 2/3	**SK80C**	120	19	21.8	6	96	100	80	M6x12	4	379	436.5	29/30
A 35 2/3	**SK95A**	130	14	16.3	5	102	115	95	M8x12	4	379	436.5	29/30
A 35 2/3	**SK95B**	130	19	21.8	6	102	115	95	M8x12	4	379	436.5	29/30
A 35 2/3	**SK95C**	130	24	27.3	8	102	115	95	M8x12	4	379	436.5	29/30
A 35 2/3	**SK110A**	150	19	21.8	6	120	130	110	M8x12	5	379	436.5	29/30
A 35 2/3	**SK110B**	150	24	27.3	8	120	130	110	M8x12	5	379	436.5	29/30
A 35 2	**SK130A**	188	24	27.3	8	142	165	130	M10x20	5	379	—	30

			Mt [Nm]	D	E	F	G	M	N	N1	N2	N4	X	P 2x	P 3x	Kg
A 35 2/3	**SC60A**	M6	15	102	7	12.5	12.5	11	82	75	60	M5x10	4	358	415.5	28/29
A 35 2/3	**SC60B**	M6	15	102	7	12.5	12.5	14	82	75	60	M5x10	4	358	415.5	29/30
A 35 2/3	**SC80A**	M6	15	115	6	12.5	12.5	14	90	100	80	M6x12	4	358	415.5	29/30
A 35 2/3	**SC80C**	M6	15	120	15.5	14.5	17.75	19	96	100	80	M6x12	4	402.5	460	30/31
A 35 2/3	**SC95A**	M6	15	130	16.5	15	17.75	14	102	115	95	M8x16	4	402.5	460	30/31
A 35 2/3	**SC95B**	M6	15	130	16.5	15	17.75	19	102	115	95	M8x16	4	402.5	460	30/31
A 35 2/3	**SC95C**	M6	15	130	16.5	15	17.75	24	102	115	95	M8x16	4	402.5	460	30/31
A 35 2/3	**SC110A**	M6	15	150	16.5	16	17.75	19	120	130	110	M8x16	5	402.5	460	32/33
A 35 2/3	**SC110B**	M6	15	150	16.5	16	17.75	24	120	130	110	M8x16	5	402.5	460	32/33
A 35 2	**SC130A**	M6	15	188	19	16	17.75	24	142	165	130	M10x20	5	402.5	—	33

A 35...F...

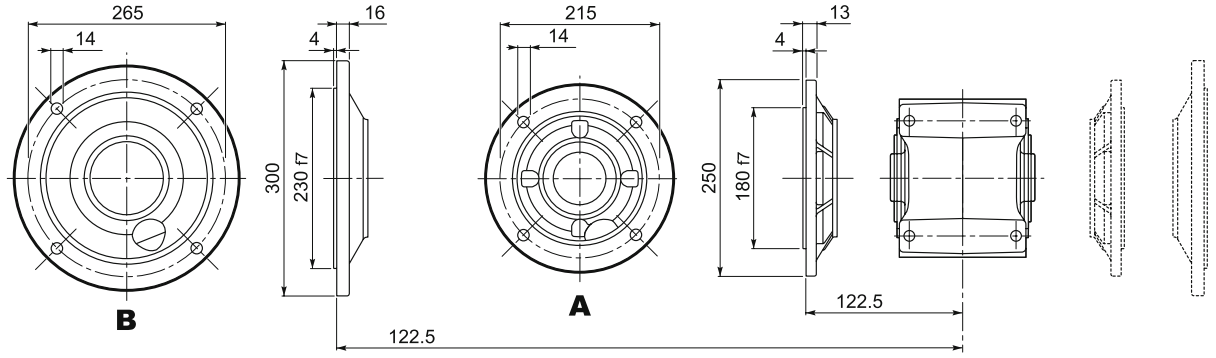

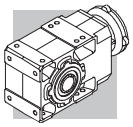

A 35

A 35...UR

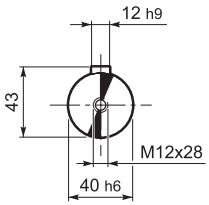

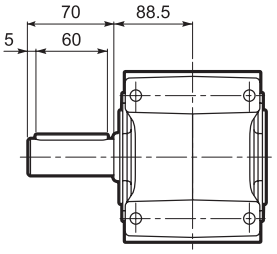

A 35...UD

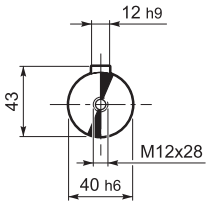

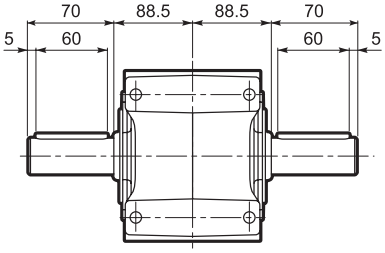

A 35...UH

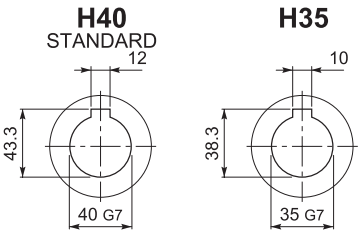

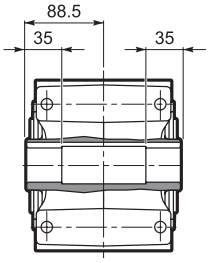

A 35...US

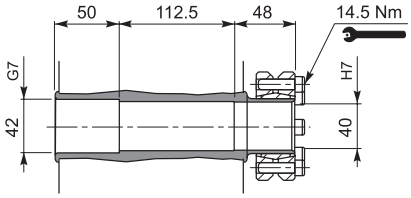

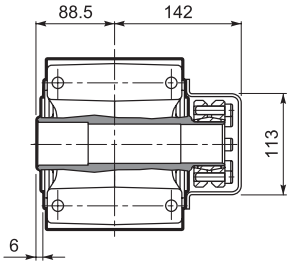

A 35...QF

	Ø
QF35	35
QF40	40

$M_{n2\ max}$ [Nm]	
A 35 QF35	550

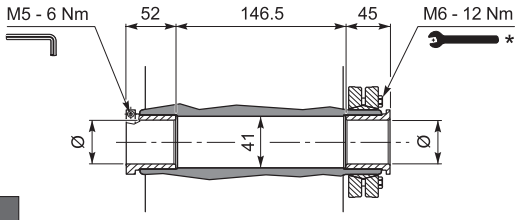

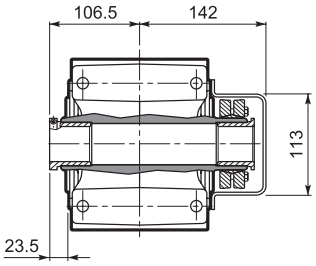

A 35...UV

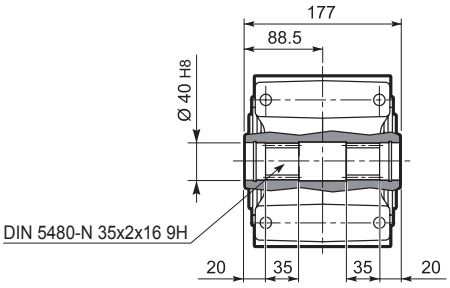

* Befolgen Sie die MONTAGEANLEITUNG die dem Getriebe beiliegt.

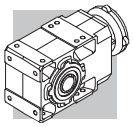

A 41...M/ME/MX

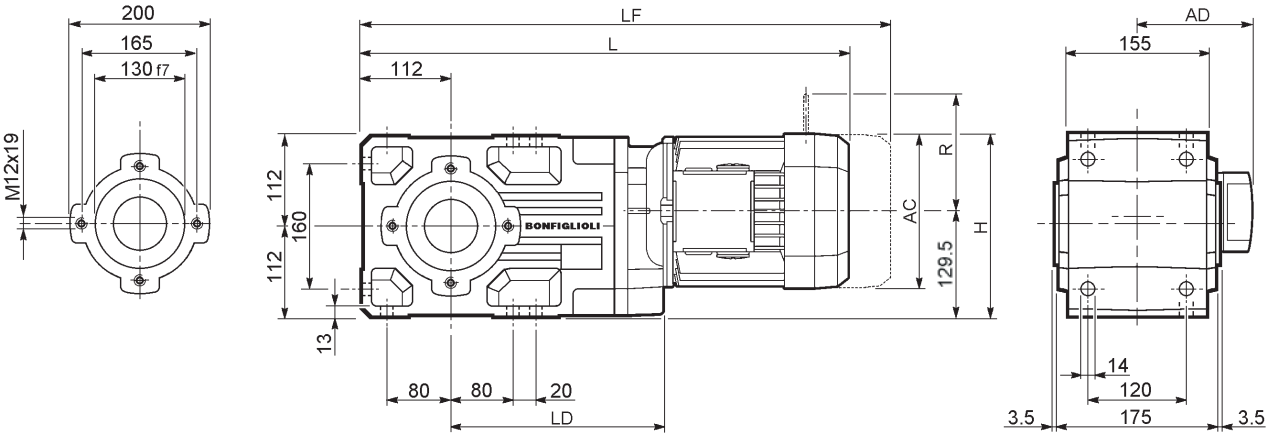

										M...FD M...FA		M...FD		M...FA	
				AC	H	L	LD	AD	Kg	LF	Kg	R	AD	R	AD
A 41 2	**S1**	**M1**		138	198.5	530	216.5	108	41	591	44	103	135	124	108
A 41 2	**S2**	**ME2S**		156	207.5	559	232	119	45	—	—	—	—	—	—
A 41 2	**S3**	**ME3S**		195	227	602	248	142	51.5	—	—	—	—	—	—
A 41 2	**S3**	**ME3L**		195	227	634	248	142	58	—	—	—	—	—	—
A 41 2	**S4**	**ME4**	**MX4**	258	258.5	742	—	193	92	—	—	—	—	—	—
A 41 2	**S4**	**ME4LB**	**MX4LA**	258	258.5	777	—	193	100	—	—	—	—	—	—
A 41 3	**S05**	**M05**		121	245	562.5	—	95	44	628.5	46	96	122	116	95
A 41 3	**S1**	**M1**		138	198.5	591.5	—	108	46	652.5	49	103	135	124	108
A 41 3	**S2**	**ME2S**		156	207.5	620.5	—	119	50	—	—	—	—	—	—
A 41 3	**S3**	**ME3S**		195	227	663.5	—	142	56.5	—	—	—	—	—	—
A 41 3	**S3**	**ME3L**		195	227	695.5	—	142	61	—	—	—	—	—	—

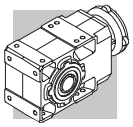

A 41...P(IEC)

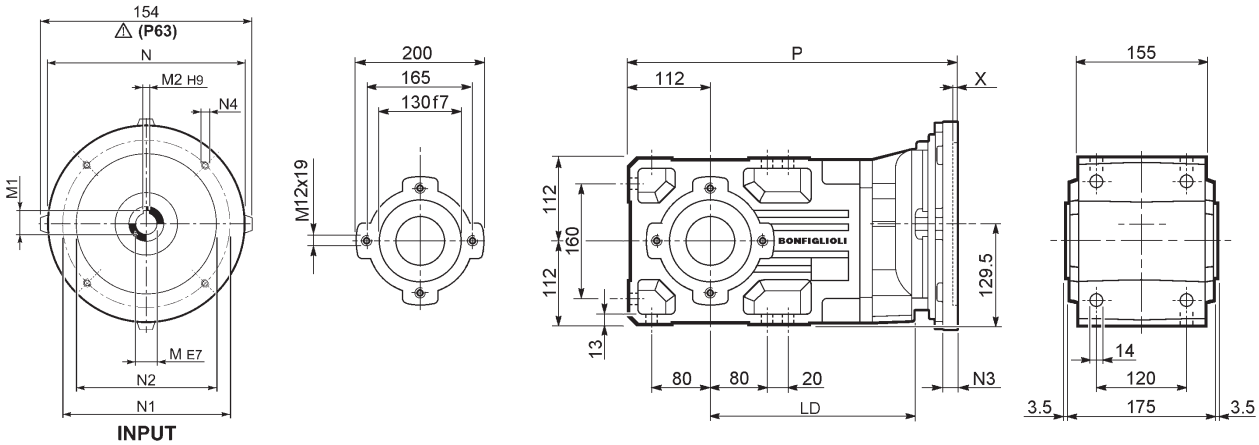

		LD	M	M1	M2	N	N1	N2	N3	N4	X	P	Kg
A 41 2	**P63**	232	11	12.8	4	140	115	95	—	M8x19	4	375	37
A 41 2	**P71**	232	14	16.3	5	160	130	110	—	M8x16	4.5	375	38
A 41 2	**P80**	248	19	21.8	6	200	165	130	—	M10x12	4	394.5	39
A 41 2	**P90**	248	24	27.3	8	200	165	130	—	M10x12	4	394.5	39
A 41 2	**P100**	—	28	31.3	8	250	215	180	—	M12x16	4.5	404.5	43
A 41 2	**P112**	—	28	31.3	8	250	215	180	—	M12x16	4.5	404.5	43
A 41 2	**P132**	—	38	41.3	10	300	265	230	16	14	5	441	46
A 41 3	**P63**	—	11	12.8	4	140	115	95	—	M8x19	4	436.5	39
A 41 3	**P71**	—	14	16.3	5	160	130	110	—	M8x16	4.5	436.5	39
A 41 3	**P80**	—	19	21.8	6	200	165	130	—	M10x12	4	456	40
A 41 3	**P90**	—	24	27.3	8	200	165	130	—	M10x12	4	456	40
A 41 3	**P100**	—	28	31.3	8	250	215	180	—	M12x16	4.5	466	44
A 41 3	**P112**	—	28	31.3	8	250	215	180	—	M12x16	4.5	466	44

A 41...HS

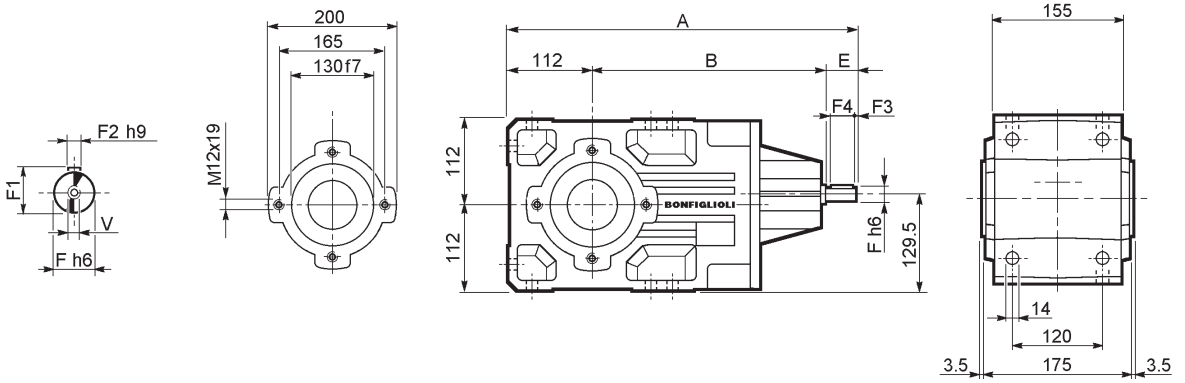

		A	B	E	F	F1	F2	F3	F4	V	Kg
A 41 2	**HS**	464	302.5	50	24	27	8	2.5	45	M8x19	40.7
A 41 3		486.5	334.5	40	19	21.5	6	2.5	35	M6x16	39.5

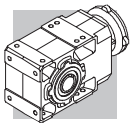

A 41...SK / SC

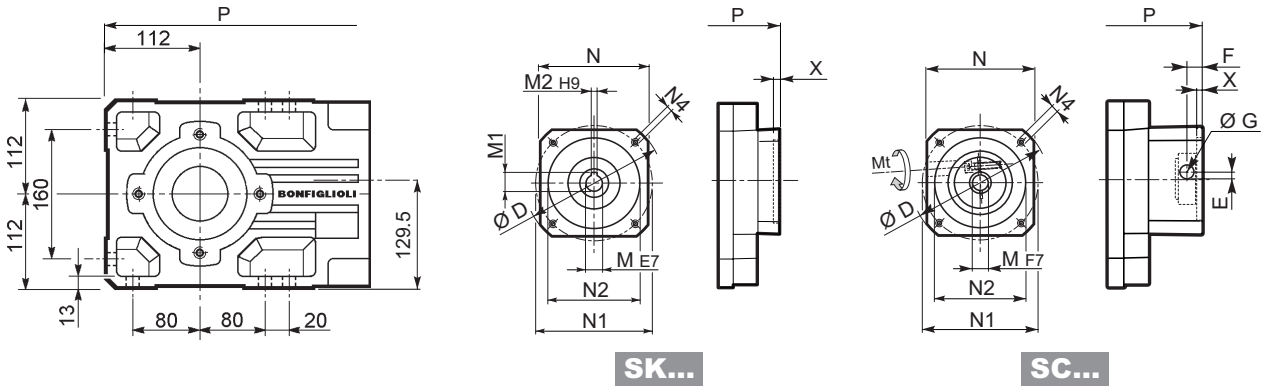

		D	M	M1	M2	N	N1	N2	N4	X	P 2x	P 3x	Kg
A41 3	**SK60A**	102	11	12.8	4	82	75	60	M5x10	3.5	—	408	40
A41 3	**SK60B**	102	14	16.3	5	82	75	60	M5x10	4	—	415	40
A41 3	**SK80A**	115	14	16.3	5	90	100	80	M6x12	4	—	415	40
A41 2	**SK80B**	120	14	16.3	5	96	100	80	M6x12	4	394.5	—	39
A41 2/3	**SK80C**	120	19	21.8	6	96	100	80	M6x12	4	394.5	456	39/40
A41 2/3	**SK95A**	130	14	16.3	5	102	115	95	M8x12	4	394.5	456	39/40
A41 2/3	**SK95B**	130	19	21.8	6	102	115	95	M8x12	4	394.5	456	39/41
A41 2/3	**SK95C**	130	24	27.3	8	102	115	95	M8x12	4	394.5	456	39/44
A41 2/3	**SK110A**	150	19	21.8	6	120	130	110	M8x12	5	394.5	456	39/44
A41 2/3	**SK110B**	150	24	27.3	8	120	130	110	M8x12	5	394.5	456	39/44
A41 2	**SK130A**	188	24	27.3	8	142	165	130	M10x20	5	394.5	—	41
A41 2	**SK130B**	189	32	35.3	10	160	165	130	M10x20	5	441	—	43
A41 2	**SK180A**	240	32	35.3	10	192	215	180	M12x19	5	441	—	43
A41 2	**SK180B**	240	38	41.3	10	192	215	180	M12x19	5	441	—	43

		Mt [Nm]		D	E	F	G	M	N	N1	N2	N4	X	P 2x	P 3x	Kg
A41 3	**SC60A**	M6	15	102	7	12.5	12.5	11	82	75	60	M5x10	4	—	435	41
A41 3	**SC60B**	M6	15	102	7	12.5	12.5	14	82	75	60	M5x10	4	—	435	41
A41 3	**SC80A**	M6	15	115	6	12.5	12.5	14	90	100	80	M6x12	4	—	435	41
A41 2	**SC80B**	M6	15	120	15.5	14.5	17.75	14	96	100	80	M6x12	4	418	—	40
A41 2/3	**SC80C**	M6	15	120	15.5	14.5	17.75	19	96	100	80	M6x12	4	418	479.5	40/41
A41 2/3	**SC95A**	M6	15	130	16.5	15	17.75	14	102	115	95	M8x16	4	418	479.5	40/42
A41 2/3	**SC95B**	M6	15	130	16.5	15	17.75	19	102	115	95	M8x16	4	418	479.5	40/42
A41 2/3	**SC95C**	M6	15	130	16.5	15	17.75	24	102	115	95	M8x16	4	418	479.5	40/43
A41 2/3	**SC110A**	M6	15	150	16.5	16	17.75	19	120	130	110	M8x16	5	418	479.5	41/47
A41 2/3	**SC110B**	M6	15	150	16.5	16	17.75	24	120	130	110	M8x16	5	418	479.5	41/47
A41 2	**SC130A**	M6	15	188	19	16	17.75	24	142	165	130	M10x20	5	418	—	42
A41 2	**SC130B**	M8	36	189	20	17	17.75	32	160	165	130	M10x20	5	464	—	46
A41 2	**SC180A**	M8	36	240	20	17.5	17.75	32	192	215	180	M12x24	5	468	—	46
A41 2	**SC180B**	M8	36	240	20	17.5	17.75	38	192	215	180	M12x24	5	468	—	46

A 41...F...

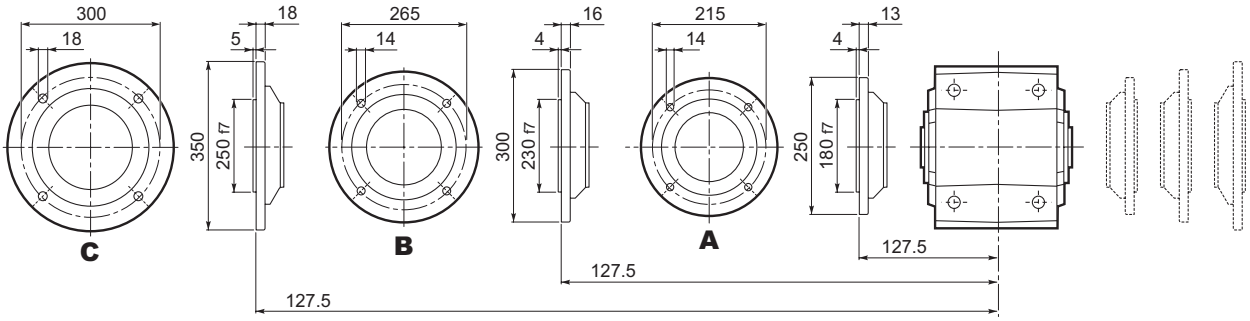

Bonfiglioli Riduttori

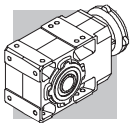

A 41

A 41...UR

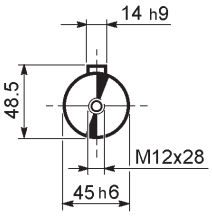

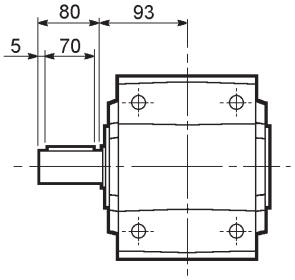

A 41...UD

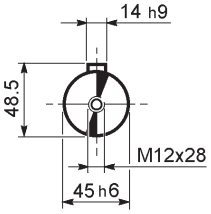

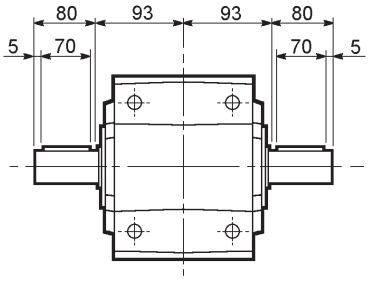

A 41...UH

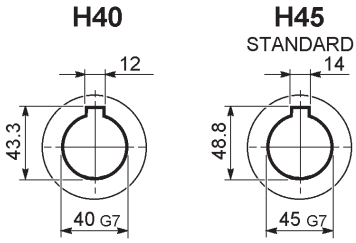

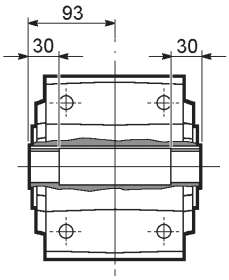

A 41...US

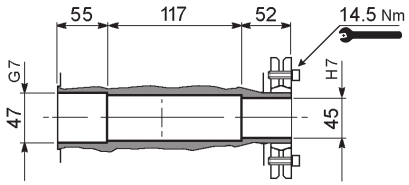

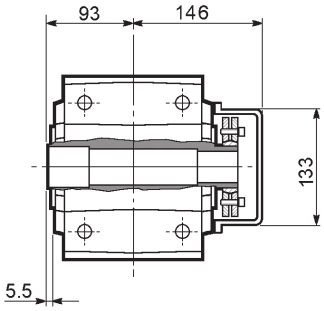

A 41...QF

	Ø
QF40	40
QF45	45

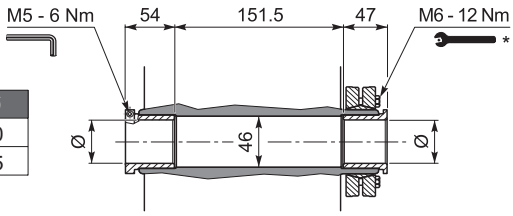

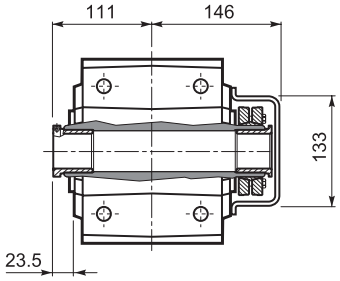

A 41...UV

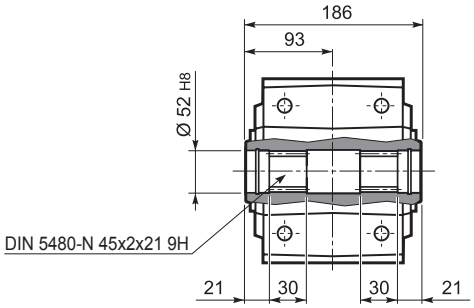

* Befolgen Sie die MONTAGEANLEITUNG die dem Getriebe beiliegt.

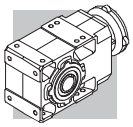

A 50...M/ME/MX

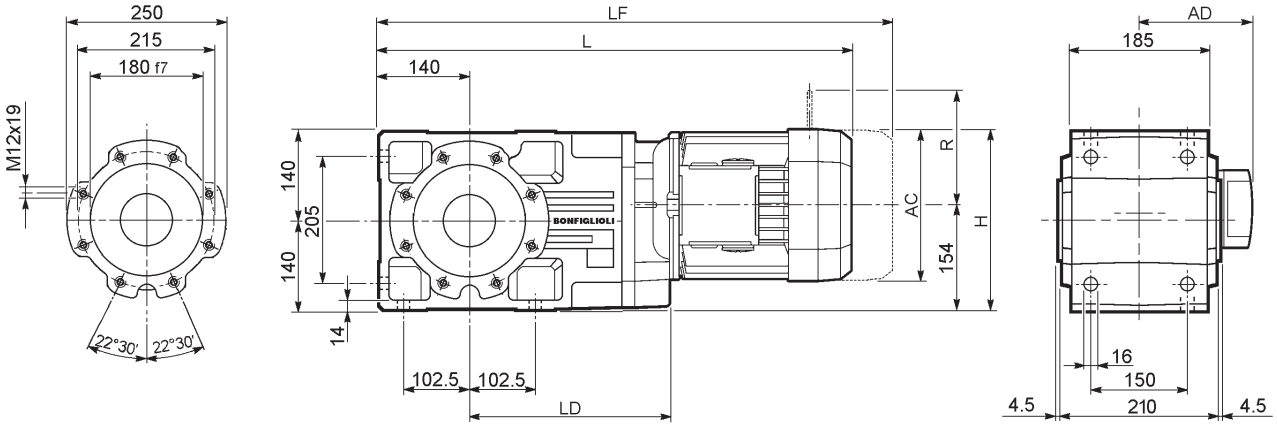

										M...FD M...FA		M...FD		M...FA	
				AC	H	L	LD	AD	Kg	LF	Kg	R	AD	R	AD
A 50 2/3	**S1**	**M1**		138	223	609.5	—	108	66	670.5	69	103	135	124	108
A 50 2/3	**S2**	**ME2S**		156	232	638.5	284.5	119	68	—	—	—	—	—	—
A 50 2/3	**S3**	**ME3S**		195	251.5	681.5	299.5	142	74.5	—	—	—	—	—	—
A 50 2/3	**S3**	**ME3L**		195	251.5	713.5	299.5	142	81	—	—	—	—	—	—
A 50 2/3	**S4**	**ME4**	**MX4**	258	283	821.5	284.5	193	115	—	—	—	—	—	—
A 50 2/3	**S4**	**ME4LB**	**MX4LA**	258	283	856.5	284.5	193	123	—	—	—	—	—	—
A 50 2/3	**S5**	**ME5S**	**MX5S**	310	309	908	—	245	143	—	—	—	—	—	—
A 50 2/3	**S5**	**ME5L**	**MX5L**	310	309	952	—	245	159	—	—	—	—	—	—
A 50 4	**S1**	**M1**		138	223	681	—	108	67	742	70	103	135	124	108
A 50 4	**S2**	**ME2S**		156	232	710	—	119	71	—	—	—	—	—	—
A 50 4	**S3**	**ME3S**		195	251.5	753	—	142	77.5	—	—	—	—	—	—
A 50 4	**S3**	**ME3L**		195	251.5	785	—	142	83	—	—	—	—	—	—

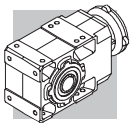

A 50...P(IEC)

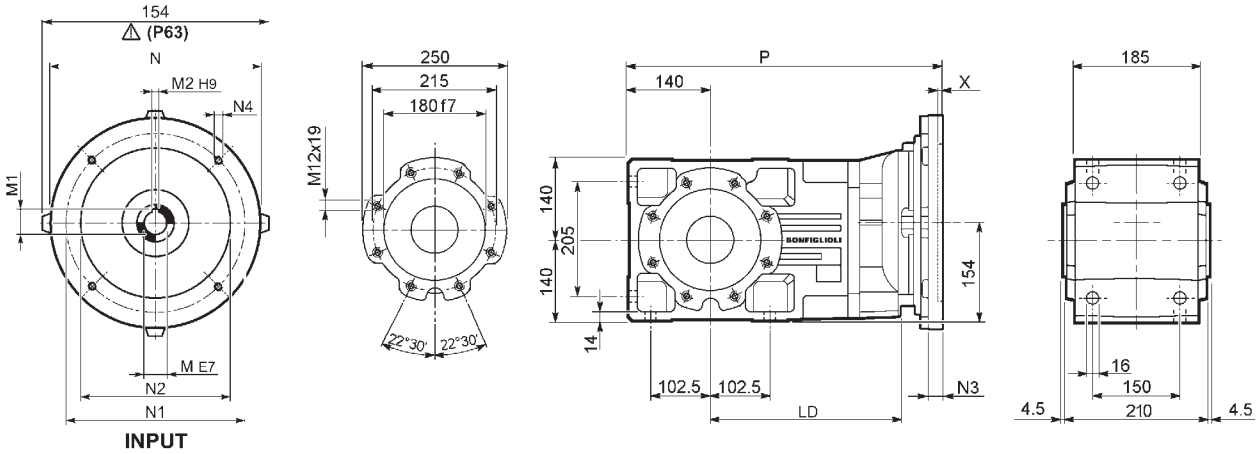

		LD	M	M1	M2	N	N1	N2	N3	N4	X	P	Kg
A 50 2/3	**P63**	284.5	11	12.8	4	140	115	95	—	M8x19	4	454.5	60
A 50 2/3	**P71**	284.5	14	16.3	5	160	130	110	—	M8x16	4.5	454.5	60
A 50 2/3	**P80**	299.5	19	21.8	6	200	165	130	—	M10x12	4	474	61
A 50 2/3	**P90**	299.5	24	27.3	8	200	165	130	—	M10x12	4	474	61
A 50 2/3	**P100**	284.5	28	31.3	8	250	215	180	—	M12x16	4.5	484	65
A 50 2/3	**P112**	284.5	28	31.3	8	250	215	180	—	M12x16	4.5	484	65
A 50 2/3	**P132**	284.5	38	41.3	10	300	265	230	16	14	5	520.5	68
A 50 2/3	**P160**	—	42	45.3	12	350	300	250	23	18	5.5	571	72
A 50 2/3	**P180**	—	48	51.8	14	350	300	250	23	18	5.5	571	72
A 50 4	**P63**	—	11	12.8	4	140	115	95	—	M8x19	4	526	62
A 50 4	**P71**	—	14	16.3	5	160	130	110	—	M8x16	4.5	526	62
A 50 4	**P80**	—	19	21.8	6	200	165	130	—	M10x12	4	545.5	63
A 50 4	**P90**	—	24	27.3	8	200	165	130	—	M10x12	4	545.5	63
A 50 4	**P100**	—	28	31.3	8	250	215	180	—	M12x16	4.5	555.5	67
A 50 4	**P112**	—	28	31.3	8	250	215	180	—	M12x16	4.5	555.5	67

A 50...HS

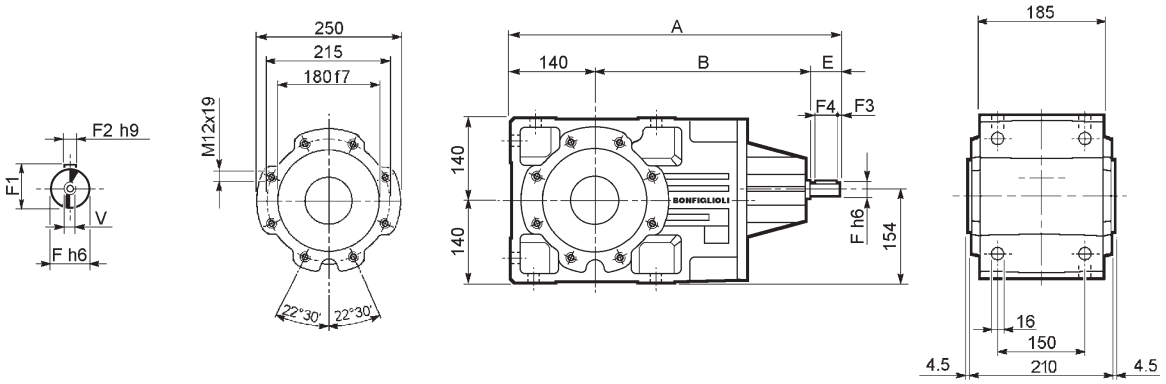

		A	B	E	F	F1	F2	F3	F4	V	Kg
A 50 2		543.5	353.5	50	24	27	8	2.5	45	M8x19	72
A 50 3	**HS**	543.5	353.5	50	24	27	8	2.5	45	M8x19	76
A 50 4		576	396	40	19	21.5	6	2.5	35	M6x16	77

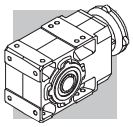

A 50...SK / SC

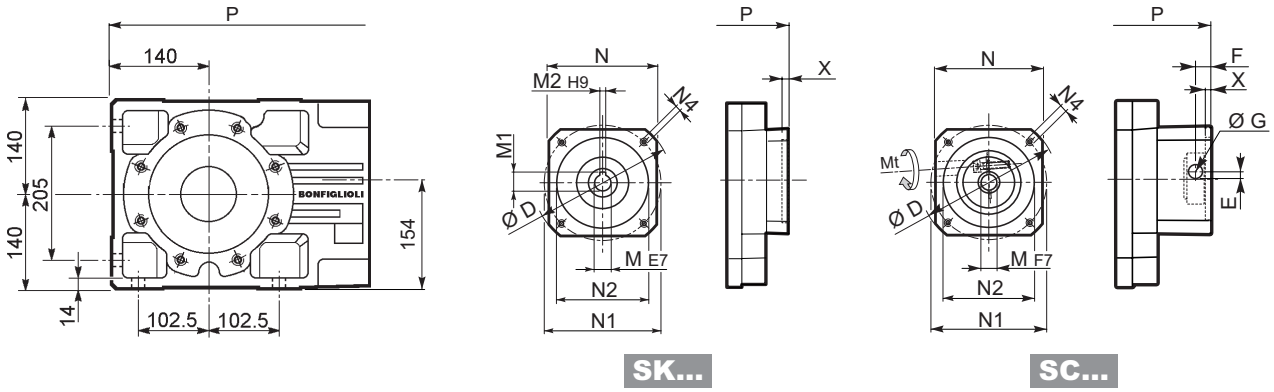

		D	M	M1	M2	N	N1	N2	N4	X	P 2/3x	P 4x	Kg
A 50 2/3	**SK80B**	120	14	16.3	5	96	100	80	M6x12	4	474	—	61/61
A 50 2/3/4	**SK80C**	120	19	21.8	6	96	100	80	M6x12	4	474	545.5	61/61/63
A 50 2/3/4	**SK95A**	130	14	16.3	5	102	115	95	M8x12	4	474	545.5	61/61/63
A 50 2/3/4	**SK95B**	130	19	21.8	6	102	115	95	M8x12	4	474	545.5	61/61/63
A 50 2/3/4	**SK95C**	130	24	27.3	8	102	115	95	M8x12	4	474	545.5	61/61/63
A 50 2/3/4	**SK110A**	150	19	21.8	6	120	130	110	M8x12	5	474	545.5	61/61/65
A 50 2/3/4	**SK110B**	150	24	27.3	8	120	130	110	M8x12	5	474	575	61/61/65
A 50 2/3/4	**SK130A**	188	24	27.3	8	142	165	130	M10x20	5	474	575	63/63/66
A 50 2/3	**SK130B**	189	32	35.3	10	160	165	130	M10x20	5	520.5	—	69/69
A 50 2/3	**SK180A**	240	32	35.3	10	192	215	180	M12x19	5	520.5	—	69/69
A 50 2/3	**SK180B**	240	38	41.3	10	192	215	180	M12x19	5	520.5	—	69/69

			Mt [Nm]	D	E	F	G	M	N	N1	N2	N4	X	P 2/3x	P 3x	Kg
A 50 2/3	**SC80B**	M6	15	120	15.5	14.5	17.75	14	96	100	80	M6x12	4	497.5	—	62/62
A 50 2/3/4	**SC80C**	M6	15	120	15.5	14.5	17.75	19	96	100	80	M6x12	4	497.5	569	62/62/64
A 50 2/3/4	**SC95A**	M6	15	130	16.5	15	17.75	14	102	115	95	M8x16	4	497.5	569	62/62/64
A 50 2/3/4	**SC95B**	M6	15	130	16.5	15	17.75	19	102	115	95	M8x16	4	497.5	569	62/62/64
A 50 2/3/4	**SC95C**	M6	15	130	16.5	15	17.75	24	102	115	95	M8x16	4	497.5	569	62/62/64
A 50 2/3/4	**SC110A**	M6	15	150	16.5	16	17.75	19	120	130	110	M8x16	5	497.5	569	63/63/66
A 50 2/3/4	**SC110B**	M6	15	150	16.5	16	17.75	24	120	130	110	M8x16	5	497.5	569	63/63/66
A 50 2/3/4	**SC130A**	M6	15	188	19	16	17.75	24	142	165	130	M10x20	5	497.5	569	64/64/67
A 50 2/3	**SC130B**	M8	36	189	20	17	17.75	32	160	165	130	M10x20	5	543.5	—	68/68
A 50 2/3	**SC180A**	M8	36	240	20	17.5	17.75	32	192	215	180	M12x24	5	547.5	—	68/68
A 50 2/3	**SC180B**	M8	36	240	20	17.5	17.75	38	192	215	180	M12x24	5	547.5	—	68/68

A 50...F...

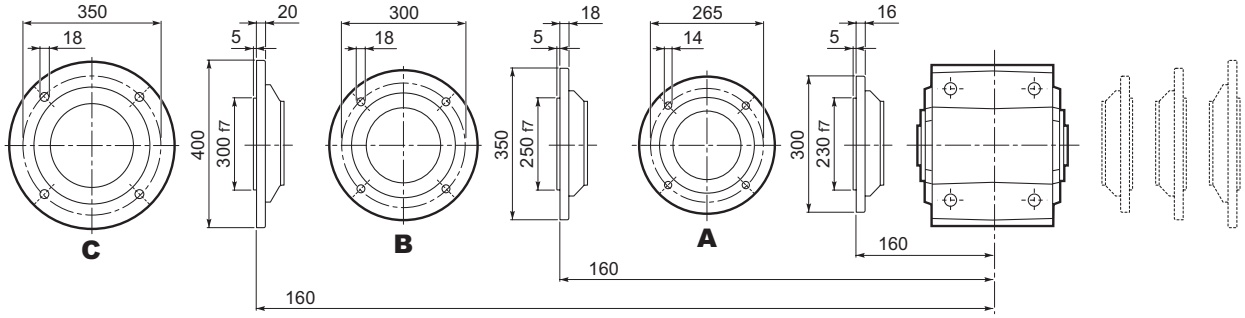

Bonfiglioli Riduttori

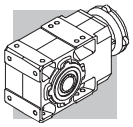

A 50

A 50...UR

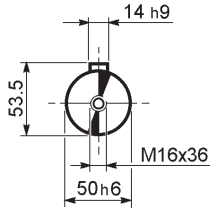

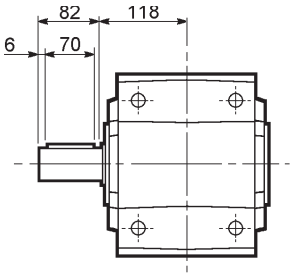

A 50...UD

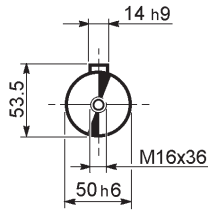

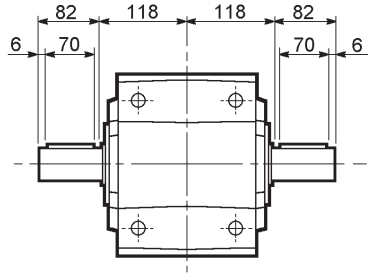

A 50...UH

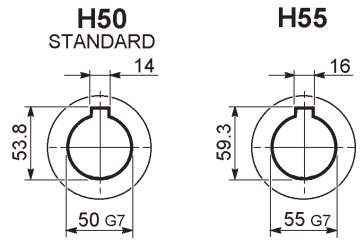

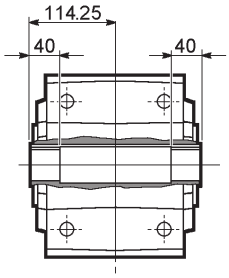

A 50...US

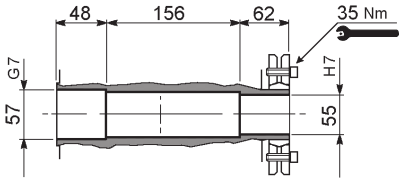

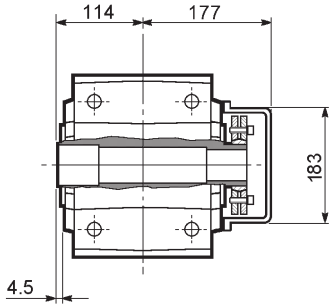

A 50...QF

	Ø
QF50	50
QF55	55

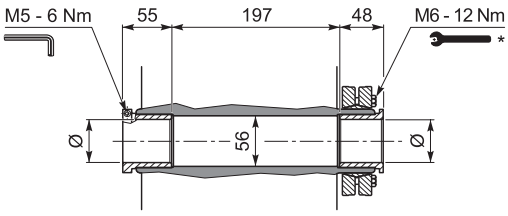

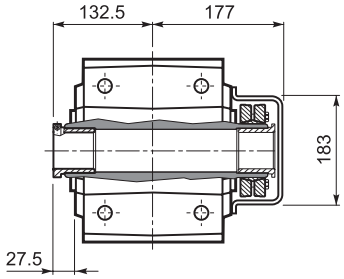

A 50...UV

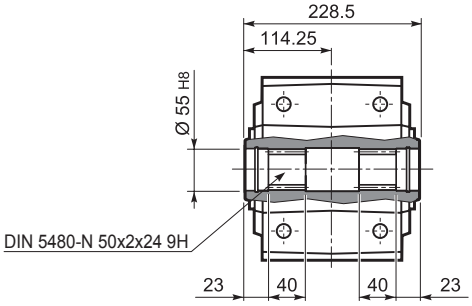

* Befolgen Sie die MONTAGEANLEITUNG die dem Getriebe beiliegt.

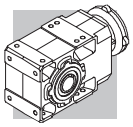

A 55...M/ME/MX

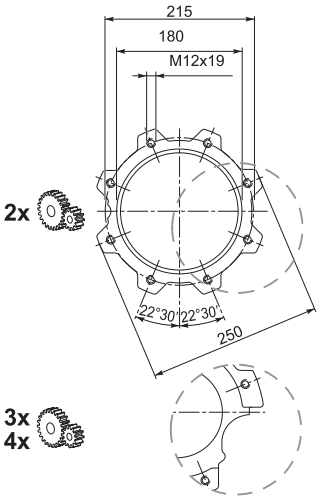

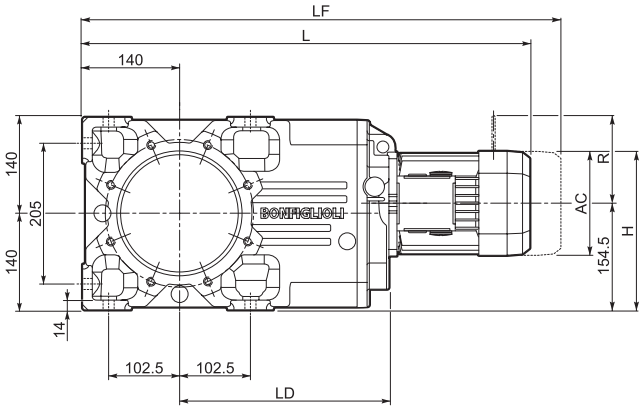

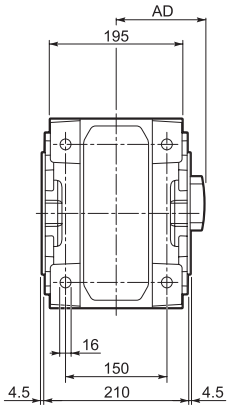

										M...FD M...FA		M...FD		M...FA	
				AC	H	L	LD	AD	Kg	LF	Kg	R	AD	R	AD
A 55 3	**S1**	**M1**		138	198.5	627.5	—	108	81	688.5	84	103	135	124	108
A 55 2/3	**S2**	**ME2S**		156	232	656.5	302.5	119	88	—	—	—	—	—	—
A 55 2/3	**S3**	**ME3S**		195	251	699.5	317.5	142	94.5	—	—	—	—	—	—
A 55 2/3	**S3**	**ME3L**		195	251	731.5	317.5	142	101	—	—	—	—	—	—
A 55 2/3	**S4**	**ME4**	**MX4**	258	283	839.5	302.5	193	135	—	—	—	—	—	—
A 55 2/3	**S4**	**ME4LB**	**MX4LA**	258	283	874.5	302.5	193	143	—	—	—	—	—	—
A 55 2/3	**S5**	**ME5S**	**MX5S**	310	309.5	926	—	245	163	—	—	—	—	—	—
A 55 2/3	**S5**	**ME5L**	**MX5L**	310	309.5	970	—	245	179	—	—	—	—	—	—
A 55 4	**S1**	**M1**		138	223	699	—	108	82	760	85	103	135	124	108
A 55 4	**S2**	**ME2S**		156	232	728	—	119	86	—	—	—	—	—	—
A 55 4	**S3**	**ME3S**		195	251.5	771	—	142	92.5	—	—	—	—	—	—
A 55 4	**S3**	**ME3L**		195	251.5	803	—	142	98	—	—	—	—	—	—

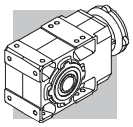

A 55...P(IEC)

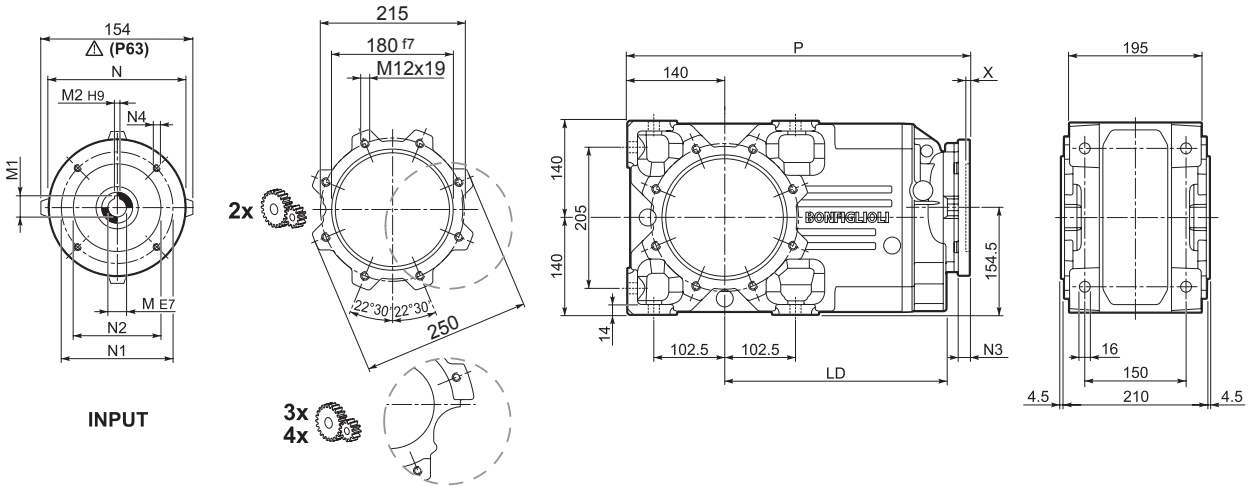

		LD	M	M1	M2	N	N1	N2	N3	N4	X	P	Kg
A 55 3	**P63**	302.5	11	12.8	4	140	115	95	—	M8x19	4	472.5	75
A 55 3	**P71**	302.5	14	16.3	5	160	130	110	—	M8x16	4.5	472.5	75
A 55 2/3	**P80**	317.5	19	21.8	6	200	165	130	—	M10x12	4	492	81
A 55 2/3	**P90**	317.5	24	27.3	8	200	165	130	—	M10x12	4	492	81
A 55 2/3	**P100**	302.5	28	31.3	8	250	215	180	—	M12x16	4.5	502	85
A 55 2/3	**P112**	302.5	28	31.3	8	250	215	180	—	M12x16	4.5	502	85
A 55 2/3	**P132**	302.5	38	41.3	10	300	265	230	16	14	5	538.5	93
A 55 2/3	**P160**	—	42	45.3	12	350	300	250	23	18	5.5	589	110
A 55 2/3	**P180**	—	48	51.8	14	350	300	250	23	18	5.5	589	110
A 55 4	**P63**	—	11	12.8	4	140	115	95	—	M8x19	4	544	77
A 55 4	**P71**	—	14	16.3	5	160	130	110	—	M8x16	4.5	544	77
A 55 4	**P80**	—	19	21.8	6	200	165	130	—	M10x12	4	563.5	78
A 55 4	**P90**	—	24	27.3	8	200	165	130	—	M10x12	4	563.5	78
A 55 4	**P100**	—	28	31.3	8	250	215	180	—	M12x16	4.5	573.5	82
A 55 4	**P112**	—	28	31.3	8	250	215	180	—	M12x16	4.5	573.5	82

A 55...HS

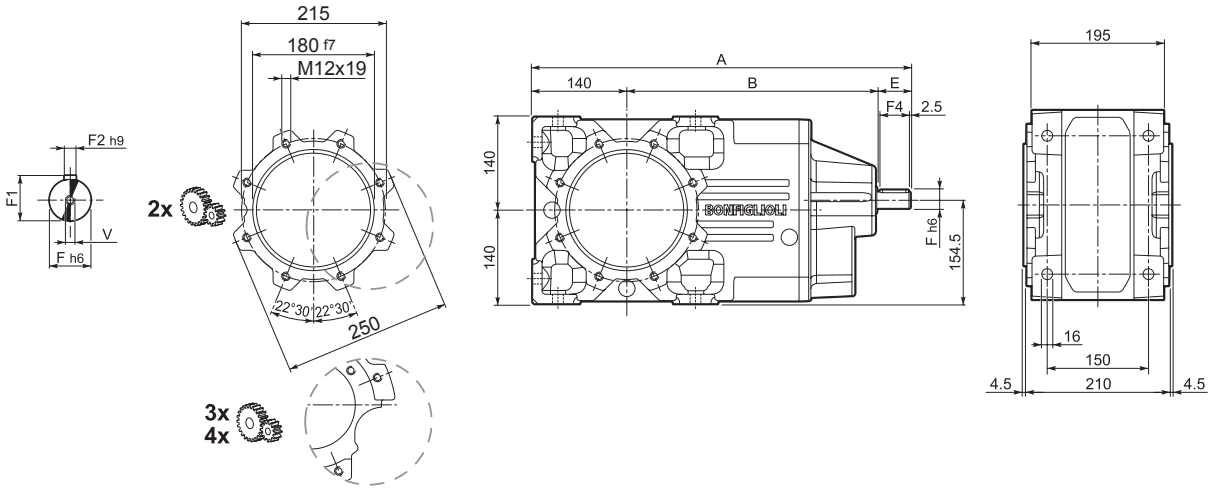

		A	B	E	F	F1	F2	F3	F4	V	Kg
A 55 2		561.5	371.5	50	24	27	8	2.5	45	M8x19	96
A 55 3	**HS**	561.5	371.5	50	24	27	8	2.5	45	M8x19	91
A 55 4		594	414	40	19	21.5	6	2.5	35	M6x16	92

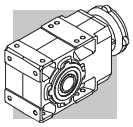

A 55...SK / SC

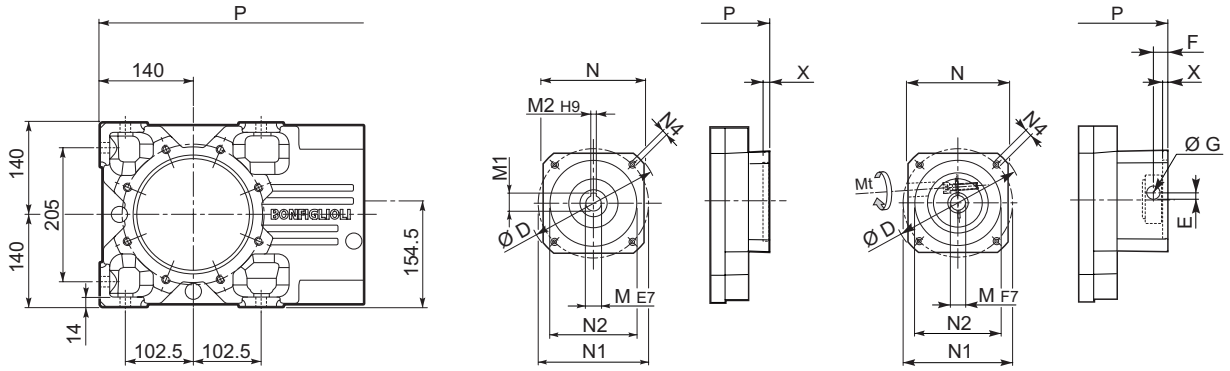

SK...

SC...

		D	M	M1	M2	N	N1	N2	N4	X	P 2/3x	P 4x	Kg
A 55 3	**SK80B**	120	14	16.3	5	96	100	80	M6x12	4	492	—	81
A 55 2/3/4	**SK80C**	120	19	21.8	6	96	100	80	M6x12	4	492	563.5	81/81/77
A 55 3/4	**SK95A**	130	14	16.3	5	102	115	95	M8x12	4	492	563.5	81/81/77
A 55 2/3/4	**SK95B**	130	19	21.8	6	102	115	95	M8x12	4	492	563.5	81/81/77
A 55 2/3/4	**SK95C**	130	24	27.3	8	102	115	95	M8x12	4	492	563.5	81/81/77
A 55 2/3/4	**SK110A**	150	19	21.8	6	120	130	110	M8x12	5	492	593	81/81/78
A 55 2/3/4	**SK110B**	150	24	27.3	8	120	130	110	M8x12	5	492	593	81/81/78
A 55 2/3/4	**SK130A**	188	24	27.3	8	142	165	130	M10x20	5	492	593	83/83/79
A 55 2/3	**SK130B**	189	32	35.3	10	160	165	130	M10x20	5	538.5	—	90/90
A 55 2/3	**SK180A**	240	32	35.3	10	192	215	180	M12x19	5	538.5	—	90/90
A 55 2/3	**SK180B**	240	38	41.3	10	192	215	180	M12x19	5	538.5	—	90/90

			Mt [Nm]	D	E	F	G	M	N	N1	N2	N4	X	P 2/3x	P 3x	Kg
A 55 3	**SC80B**	M6	15	120	15.5	14.5	17.75	14	96	100	80	M6x12	4	515.5	—	82
A 55 2/3/4	**SC80C**	M6	15	120	15.5	14.5	17.75	19	96	100	80	M6x12	4	515.5	587	82/82/78
A 55 3/4	**SC95A**	M6	15	130	16.5	15	17.75	14	102	115	95	M8x16	4	515.5	587	82/82/78
A 55 2/3/4	**SC95B**	M6	15	130	16.5	15	17.75	19	102	115	95	M8x16	4	515.5	587	82/82/78
A 55 2/3/4	**SC95C**	M6	15	130	16.5	15	17.75	24	102	115	95	M8x16	4	515.5	587	82/82/78
A 55 2/3/4	**SC110A**	M6	15	150	16.5	16	17.75	19	120	130	110	M8x16	5	515.5	587	83/83/79
A 55 2/3/4	**SC110B**	M6	15	150	16.5	16	17.75	24	120	130	110	M8x16	5	515.5	587	83/83/79
A 55 2/3/4	**SC130A**	M6	15	188	19	16	17.75	24	142	165	130	M10x20	5	515.5	587	84/84/80
A 55 2/3	**SC130B**	M8	36	189	20	17	17.75	32	160	165	130	M10x20	5	561.5	—	93/93
A 55 2/3	**SC180A**	M8	36	240	20	17.5	17.75	32	192	215	180	M12x24	5	565.5	—	93/93
A 55 2/3	**SC180B**	M8	36	240	20	17.5	17.75	38	192	215	180	M12x24	5	565.5	—	93/93

A 55...F...

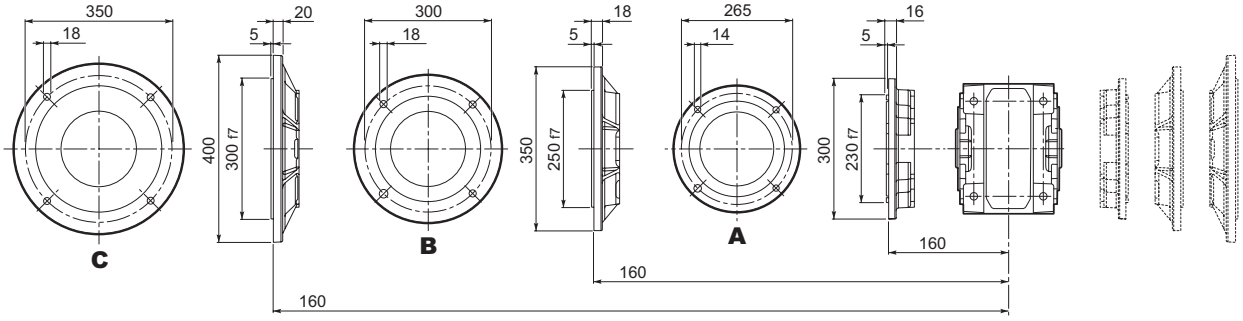

Bonfiglioli Riduttori

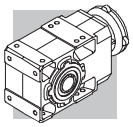

A 55

A 55...UR

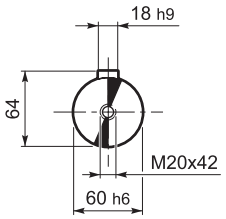

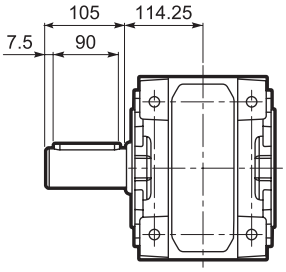

A 55...UD

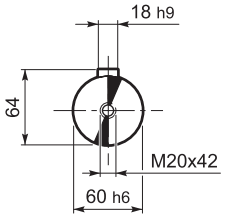

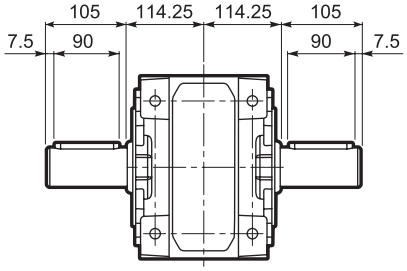

A 55...UH

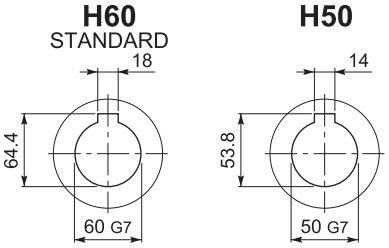

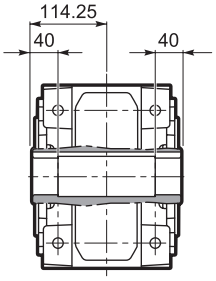

A 55...US

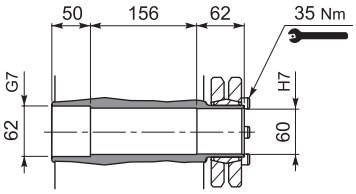

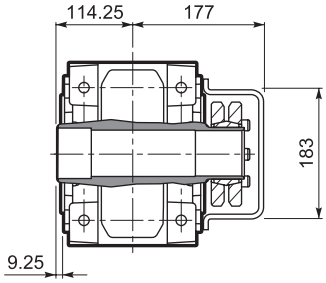

A 55...QF

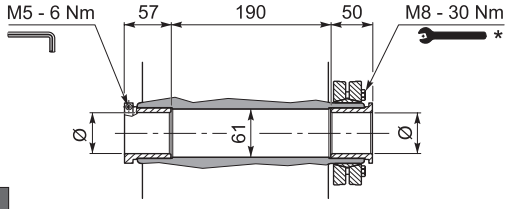

	Ø
QF55	55
QF60	60

	$M_{n2\ max}$ [Nm]
A 55 QF55	1900

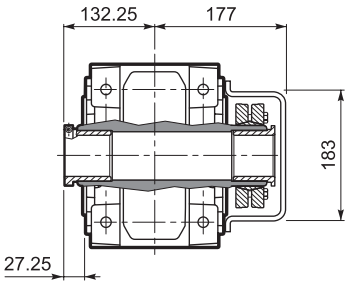

A 55...UV

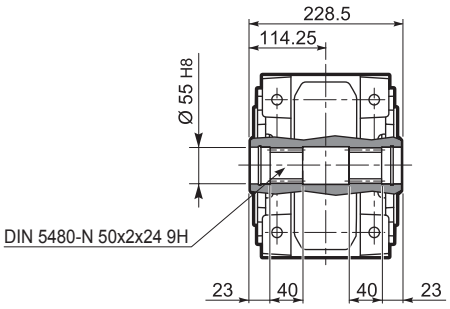

* Befolgen Sie die MONTAGEANLEITUNG die dem Getriebe beiliegt.

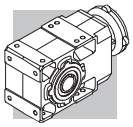

A 60...M/ME/MX

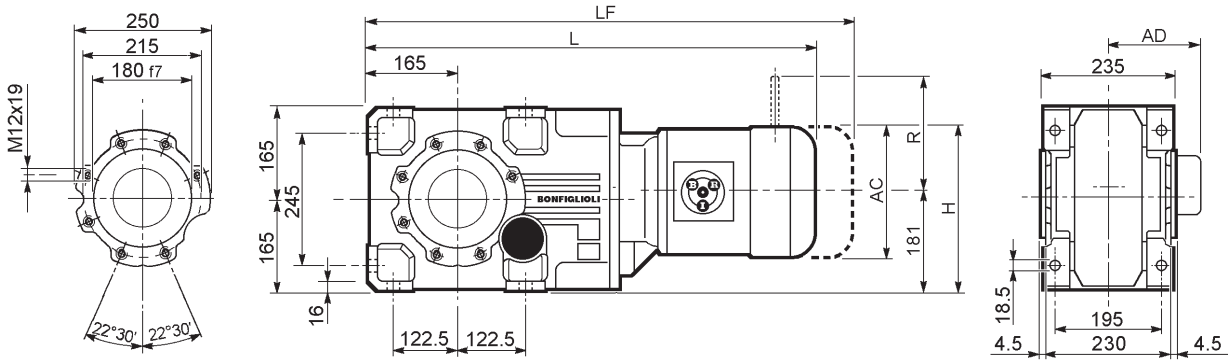

									M...FD M...FA		M...FD		M...FA	
				AC	H	L	AD	Kg	LF	Kg	R	AD	R	AD
A 60 2/3	**S2**	**ME2S**		156	256.5	700.5	119	98	—	—	—	—	—	—
A 60 2/3	**S3**	**ME3S**		195	276	743.5	142	103	—	—	—	—	—	—
A 60 2/3	**S3**	**ME3L**		195	276	775.5	142	111	—	—	—	—	—	—
A 60 2/3	**S4**	**ME4**	**MX4**	258	307.5	883.5	193	145	—	—	—	—	—	—
A 60 2/3	**S4**	**ME4LB**	**MX4LA**	258	307.5	918.5	193	153	—	—	—	—	—	—
A 60 2/3	**S5**	**ME5S**	**MX5S**	310	333.5	970	245	173	—	—	—	—	—	—
A 60 2/3	**S5**	**ME5L**	**MX5L**	310	333.5	1014	245	189	—	—	—	—	—	—
A 60 4	**S1**	**M1**		138	247.5	742	108	100	803	103	103	135	124	108
A 60 4	**S2**	**ME2S**		156	256.5	771	119	104	—	—	—	—	—	—
A 60 4	**S3**	**ME3S**		195	276	814	142	109	—	—	—	—	—	—
A 60 4	**S3**	**ME3L**		195	276	846	142	117	—	—	—	—	—	—

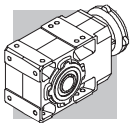

A 60...P(IEC)

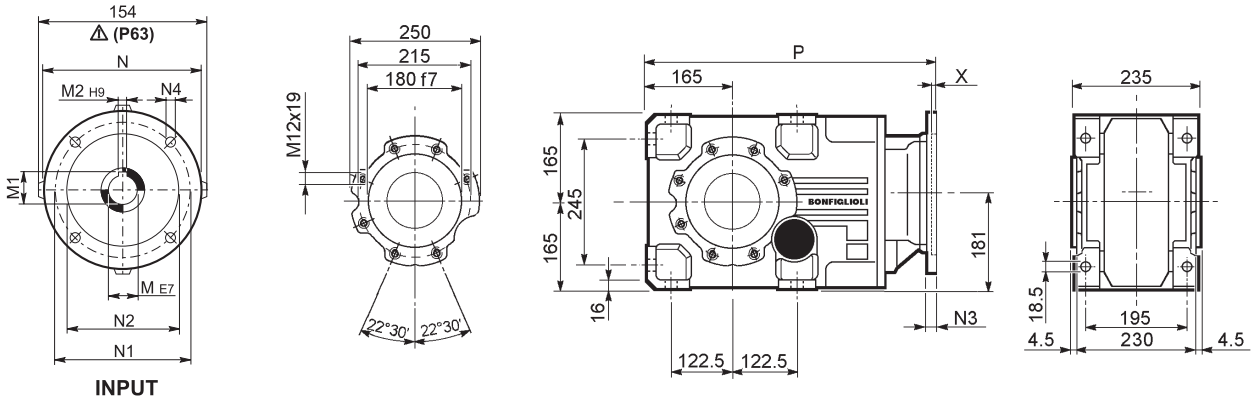

		M	M1	M2	N	N1	N2	N3	N4	X	P	Kg
A 60 3	**P63**	11	12.8	4	140	115	95	—	M8x19	4	516.5	90
A 60 3	**P71**	14	16.3	5	160	130	110	—	M8x16	4.5	516.5	90
A 60 2/3	**P80**	19	21.8	6	200	165	130	—	M10x12	4	536	91
A 60 2/3	**P90**	24	27.3	8	200	165	130	—	M10x12	4	536	91
A 60 2/3	**P100**	28	31.3	8	250	215	180	—	M12x16	4.5	546	95
A 60 2/3	**P112**	28	31.3	8	250	215	180	—	M12x16	4.5	546	95
A 60 2/3	**P132**	38	41.3	10	300	265	230	16	14	5	582.5	104
A 60 2/3	**P160**	42	45.3	12	350	300	250	23	18	5.5	633	121
A 60 2/3	**P180**	48	51.8	14	350	300	250	23	18	5.5	633	121
A 60 4	**P63**	11	12.8	4	140	115	95	—	M8x19	4	587	88
A 60 4	**P71**	14	16.3	5	160	130	110	—	M8x16	4.5	587	88
A 60 4	**P80**	19	21.8	6	200	165	130	—	M10x12	4	606.5	90
A 60 4	**P90**	24	27.3	8	200	165	130	—	M10x12	4	606.5	90
A 60 4	**P100**	28	31.3	8	250	215	180	—	M12x16	4.5	616.5	94
A 60 4	**P112**	28	31.3	8	250	215	180	—	M12x16	4.5	616.5	94

A 60...HS

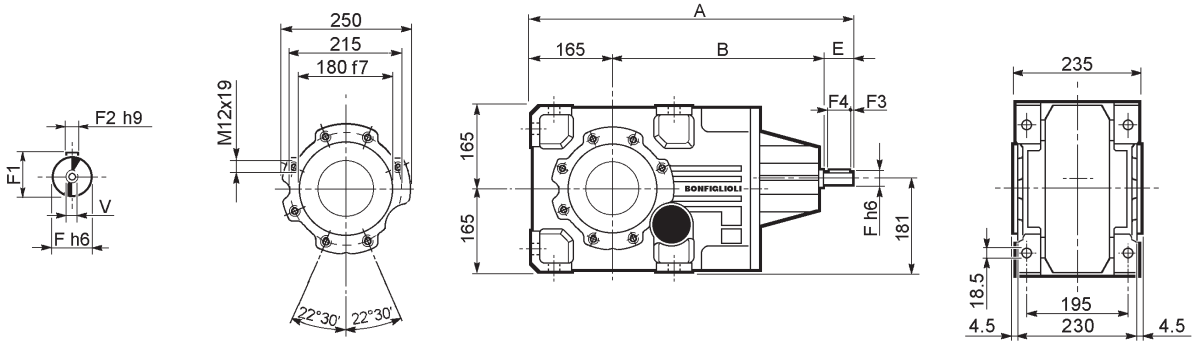

		A	B	E	F	F1	F2	F3	F4	V	Kg
A 60 2	**HS**	633	408	60	28	31	8	5.0	50	M10x22	106
A 60 3		633	408	60	28	31	8	5.0	50	M10x22	106
A 60 4		676	461	50	24	27	8	2.5	45	M8x19	112

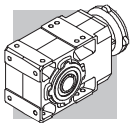

A 60...SK / SC

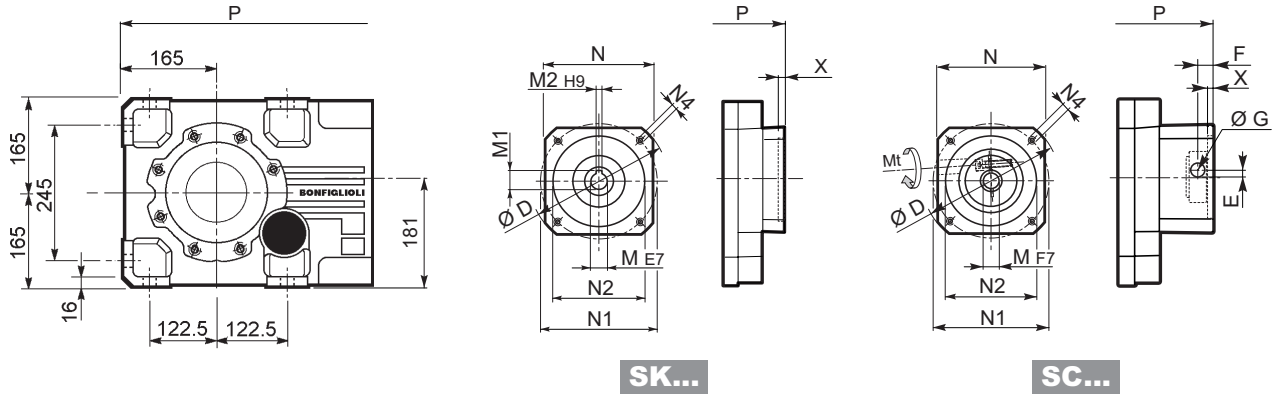

		D	M	M1	M2	N	N1	N2	N4	X	P 2/3x	P 4x	Kg
A 60 4	**SK80B**	120	14	16.3	5	96	100	80	M6x12	4	—	606.5	89
A 60 2/3/4	**SK80C**	120	19	21.8	6	96	100	80	M6x12	4	536	606.5	93/93/92
A 60 2/3/4	**SK95A**	130	14	16.3	5	102	115	95	M8x12	4	536	606.5	93/93/92
A 60 2/3/4	**SK95B**	130	19	21.8	6	102	115	95	M8x12	4	536	606.5	93/93/92
A 60 2/3/4	**SK95C**	130	24	27.3	8	102	115	95	M8x12	4	536	606.5	93/93/92
A 60 2/3/4	**SK110A**	140	19	21.8	6	120	130	110	M8x12	5	536	606.5	93/93/92
A 60 2/3/4	**SK110B**	140	24	27.3	8	120	130	110	M8x12	5	536	606.5	93/93/92
A 60 2/3/4	**SK130A**	188	24	27.3	8	142	165	130	M10x20	5	536	606.5	97/97/103
A 60 2/3	**SK130B**	189	32	35.3	10	160	165	130	M10x20	5	582.5	—	102/102
A 60 2/3	**SK180A**	240	32	35.3	10	192	215	180	M12x19	5	582.5	—	102/102
A 60 2/3	**SK180B**	240	38	41.3	10	192	215	180	M12x19	5	582.5	—	102/102

			Mt [Nm]	D	E	F	G	M	N	N1	N2	N4	X	P 2/3x	P 3x	Kg
A 60 4	**SC80B**	M6	15	120	15.5	14.5	17.75	14	96	100	80	M6x12	4	—	630	90
A 60 2/3/4	**SC80C**	M6	15	120	15.5	14.5	17.75	19	96	100	80	M6x12	4	559.5	630	94/94/93
A 60 2/3/4	**SC95A**	M6	15	130	16.5	15	17.75	14	102	115	95	M8x16	4	559.5	630	94/94/93
A 60 2/3/4	**SC95B**	M6	15	130	16.5	15	17.75	19	102	115	95	M8x16	4	559.5	630	94/94/93
A 60 2/3/4	**SC95C**	M6	15	130	16.5	15	17.75	24	102	115	95	M8x16	4	559.5	630	94/94/93
A 60 2/3/4	**SC110A**	M6	15	140	16.5	16	17.75	19	120	130	110	M8x16	5	559.5	630	95/95/93
A 60 2/3/4	**SC110B**	M6	15	140	16.5	16	17.75	24	120	130	110	M8x16	5	559.5	630	95/95/93
A 60 2/3/4	**SC130A**	M6	15	188	19	16	17.75	24	142	165	130	M10x20	5	559.5	630	96/96/104
A 60 2/3	**SC130B**	M8	36	189	20	17	17.75	32	160	165	130	M10x20	5	605.5	—	105/105
A 60 2/3	**SC180A**	M8	36	240	20	17.5	17.75	32	192	215	180	M12x24	5	609.5	—	105/105
A 60 2/3	**SC180B**	M8	36	240	20	17.5	17.75	38	192	215	180	M12x24	5	609.5	—	105/105

A 60...F...

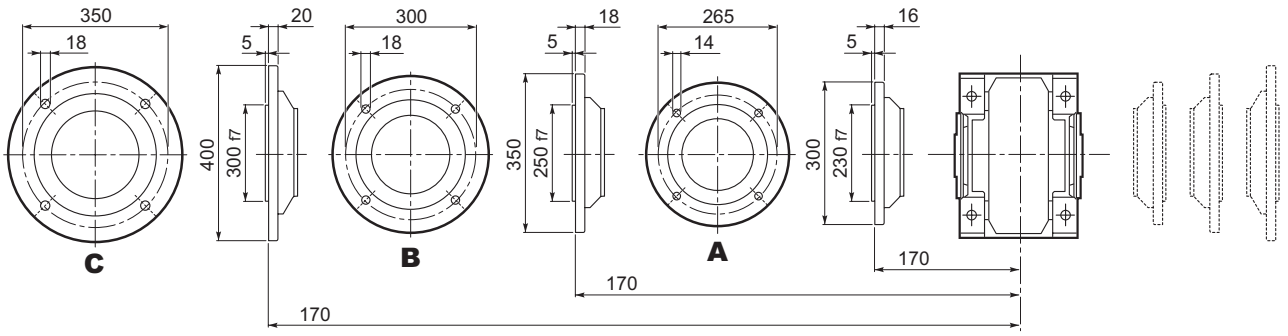

Bonfiglioli Riduttori

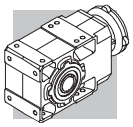

A 60

A 60...UR

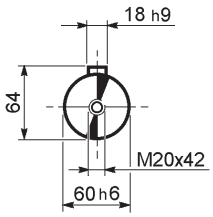

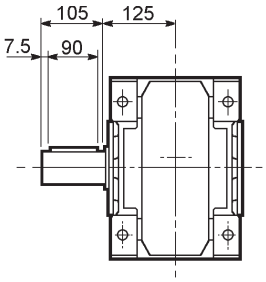

A 60...UD

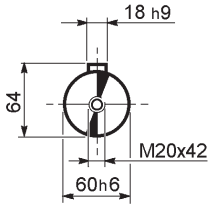

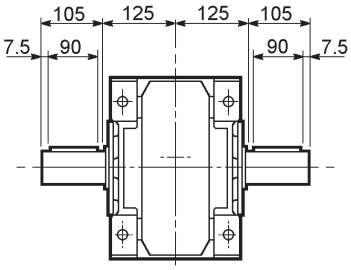

A 60...UH

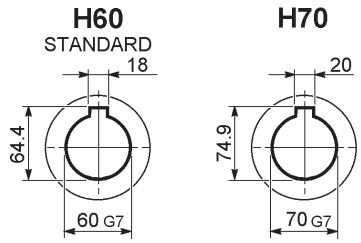

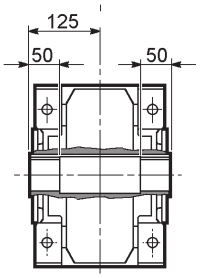

A 60...US

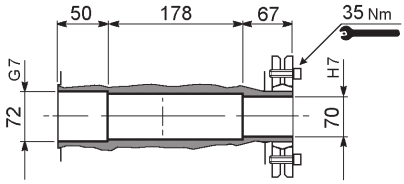

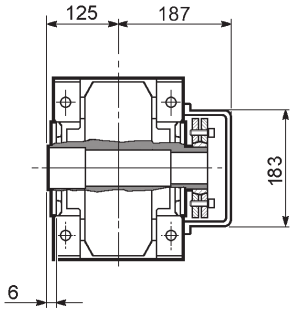

A 60...QF

	Ø
QF60	60
QF65	65
QF70	70

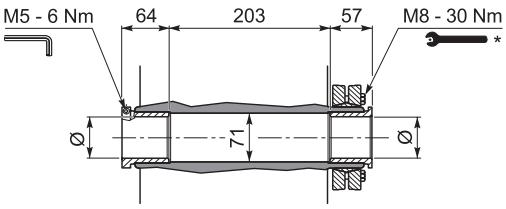

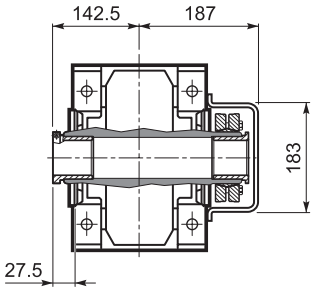

A 60...UV

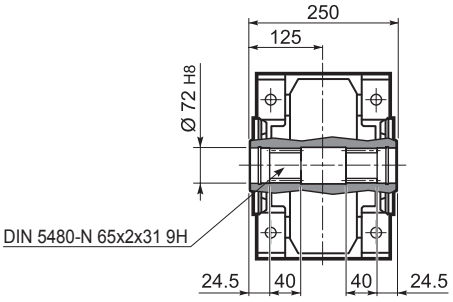

* Befolgen Sie die MONTAGEANLEITUNG die dem Getriebe beiliegt.

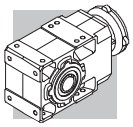

A 70...M/ME/MX

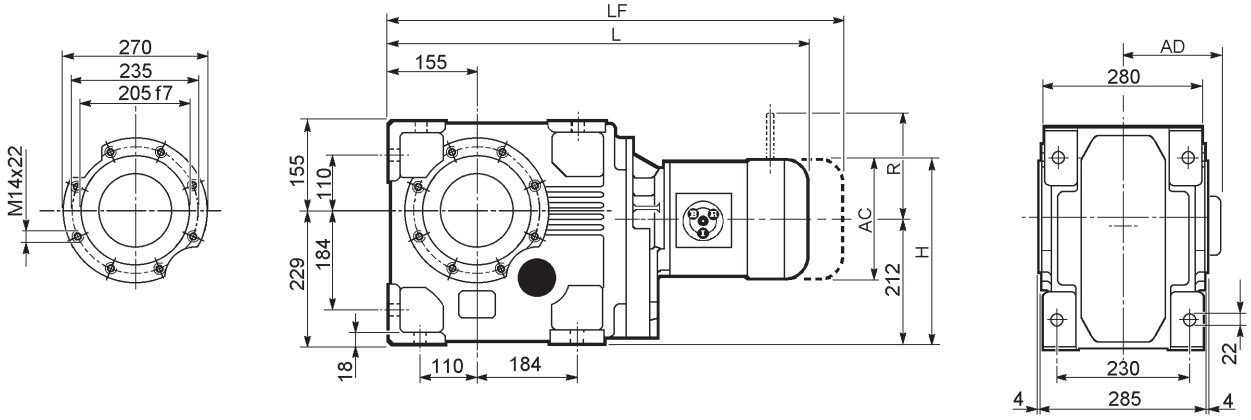

									M...FD M...FA		M...FD		M...FA	
				AC	H	L	AD	Kg	LF	Kg	R	AD	R	AD
A 70 3	**S2**	**ME2S**		156	290	688.5	119	152	—	—	—	—	—	—
A 70 3	**S3**	**ME3S**		195	309.5	731.5	142	158.5	—	—	—	—	—	—
A 70 3	**S3**	**ME3L**		195	309.5	763.5	142	164	—	—	—	—	—	—
A 70 3	**S4**	**ME4**	**MX4**	258	341	872.5	193	198	—	—	—	—	—	—
A 70 3	**S4**	**ME4LB**	**MX4LA**	258	341	907.5	193	206	—	—	—	—	—	—
A 70 3	**S5**	**ME5S**	**MX5S**	310	367	958	245	226	—	—	—	—	—	—
A 70 3	**S5**	**ME5L**	**MX5L**	310	367	1002	245	242	—	—	—	—	—	—
A 70 4	**S1**	**M1**		138	281	710.5	108	152	771.5	155	103	135	124	108
A 70 4	**S2**	**ME2S**		156	290	739.5	119	156	—	—	—	—	—	—
A 70 4	**S3**	**ME3S**		195	309.5	782.5	142	162.5	—	—	—	—	—	—
A 70 4	**S3**	**ME3L**		195	309.5	814.5	142	168	—	—	—	—	—	—
A 70 4	**S4**	**ME4**	**MX4**	258	341	922.5	193	202	—	—	—	—	—	—
A 70 4	**S4**	**ME4LB**	**MX4LA**	258	341	957.5	193	210	—	—	—	—	—	—

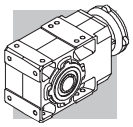

A 70...P (IEC)

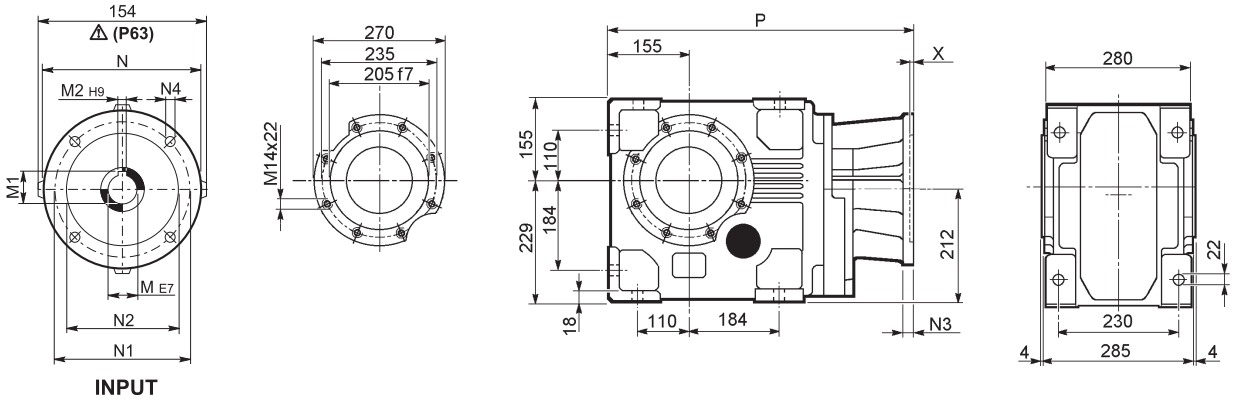

		M	M1	M2	N	N1	N2	N3	N4	X	P	Kg
A 70 3	**P80**	19	21.8	6	200	165	130	—	M10x12	4	524	144
A 70 3	**P90**	24	27.3	8	200	165	130	—	M10x12	4	524	144
A 70 3	**P100**	28	31.3	8	250	215	180	—	M12x16	4.5	534	146
A 70 3	**P112**	28	31.3	8	250	215	180	—	M12x16	4.5	534	146
A 70 3	**P132**	38	41.3	10	300	265	230	16	14	5	570.5	154
A 70 3	**P160**	42	45.3	12	350	300	250	23	18	6	626	169
A 70 3	**P180**	48	51.8	14	350	300	250	23	18	6	626	169
A 70 3	**P200**	55	59.3	16	400	350	300	—	M16x25	7	651	179
A 70 4	**P63**	11	12.8	4	140	115	95	—	M8x19	4	555.5	146
A 70 4	**P71**	14	16.3	5	160	130	110	—	M8x16	4.5	555.5	146
A 70 4	**P80**	19	21.8	6	200	165	130	—	M10x12	4	575	147
A 70 4	**P90**	24	27.3	8	200	165	130	—	M10x12	4	575	147
A 70 4	**P100**	28	31.3	8	250	215	180	—	M12x16	4.5	585	148
A 70 4	**P112**	28	31.3	8	250	215	180	—	M12x16	4.5	585	148
A 70 4	**P132**	38	41.3	10	300	265	230	16	14	5	618.5	157

A 70...HS

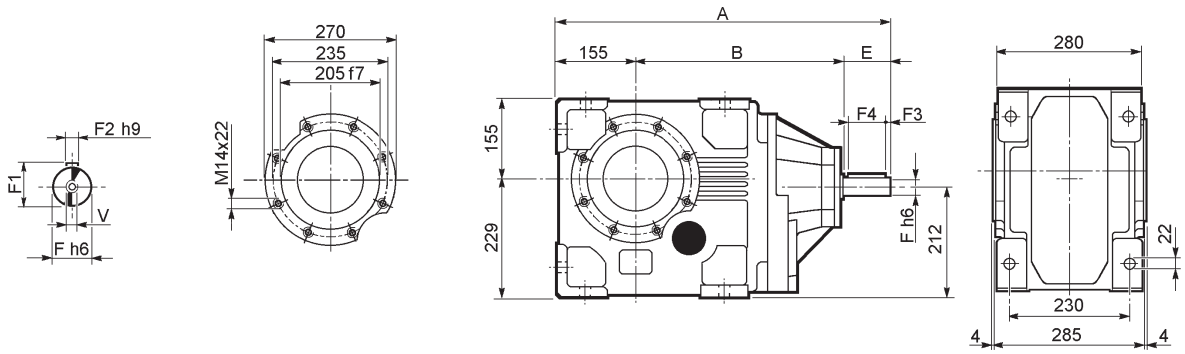

		A	B	E	F	F1	F2	F3	F4	V	Kg
A 70 3	**HS**	708.5	443.5	110	42	45	12	10	90	M12x28	165
A 70 4		644.5	439.5	50	24	27	8	2.5	45	M8x19	149

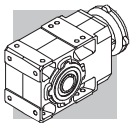

A 70

A 70...UR

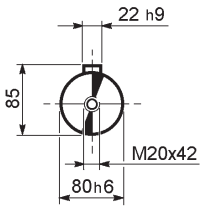

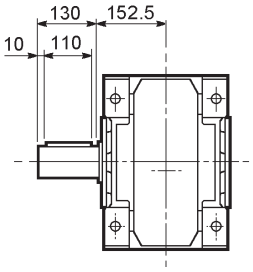

A 70...UD

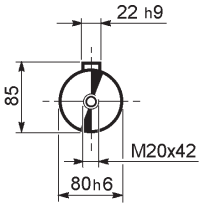

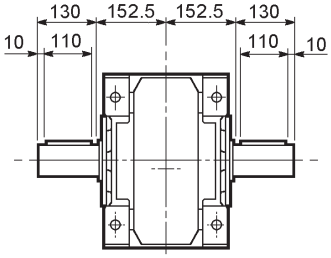

A 70...UH

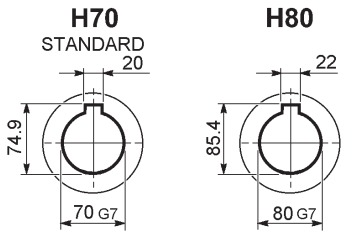

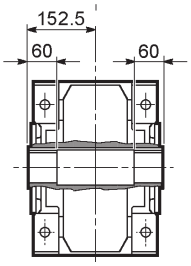

A 70...US

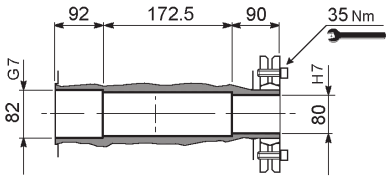

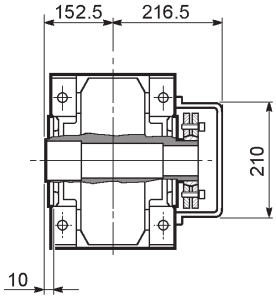

A 70...F...

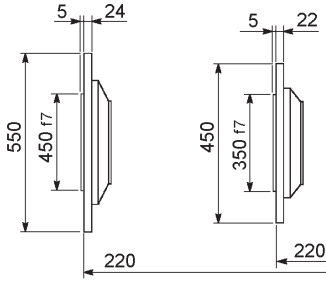

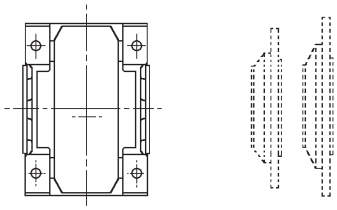

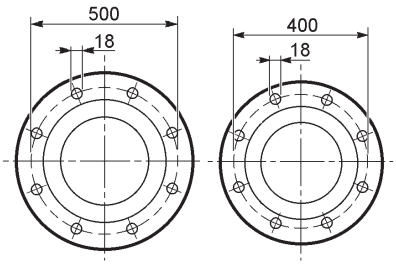

B **A**

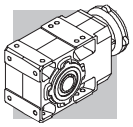

A 80...M/ME/MX

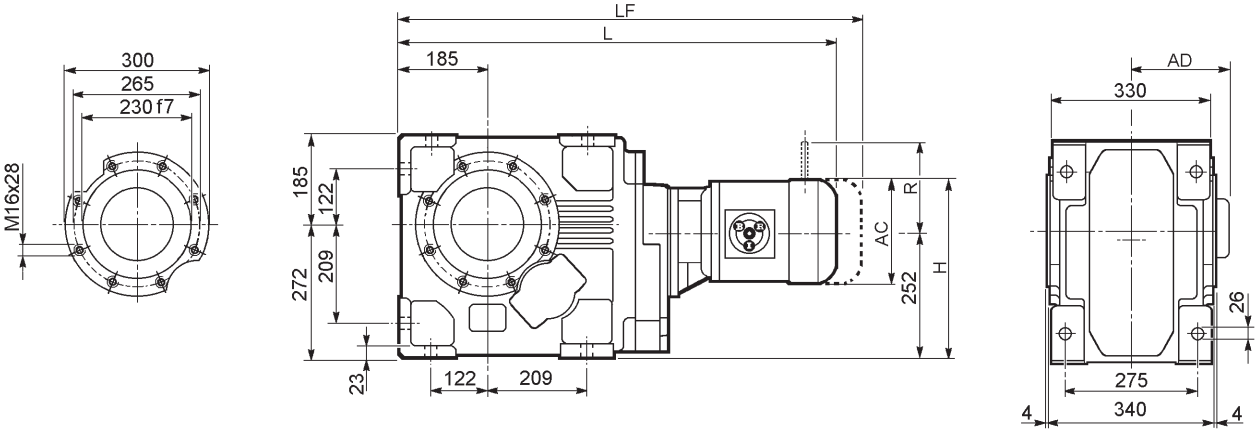

									M...FD M...FA		M...FD		M...FA	
				AC	H	L	AD	Kg	LF	Kg	R	AD	R	AD
A 80 3	**S3**	**ME3S**		195	349.5	809.5	142	257.5	—	—	—	—	—	—
A 80 3	**S3**	**ME3L**		195	349.5	841.5	142	264	—	—	—	—	—	—
A 80 3	**S4**	**ME4**	**MX4**	258	381	949.5	193	298	—	—	—	—	—	—
A 80 3	**S4**	**ME4LB**	**MX4LA**	258	381	984.5	193	306	—	—	—	—	—	—
A 80 3	**S5**	**ME5S**	**MX5S**	310	407	1036	245	326	—	—	—	—	—	—
A 80 3	**S5**	**ME5L**	**MX5L**	310	407	1080	245	342	—	—	—	—	—	—
A 80 4	**S1**	**M1**		138	321	800.5	108	246	861.5	249	103	135	124	108
A 80 4	**S2**	**M2S**		156	330	829.5	119	250	899.5	254	129	146	134	119
A 80 4	**S2**	**ME2S**		156	330	829.5	119	250	—	—	—	—	—	—
A 80 4	**S3**	**ME3S**		195	349.5	872.5	142	256.5	—	—	—	—	—	—
A 80 4	**S3**	**ME3L**		195	349.5	904.5	142	262	—	—	—	—	—	—
A 80 4	**S4**	**ME4**	**MX4**	258	381	1012.5	193	296	—	—	—	—	—	—
A 80 4	**S4**	**ME4LB**	**MX4LA**	258	381	1047.5	193	304	—	—	—	—	—	—

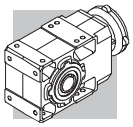

A 80...P(IEC)

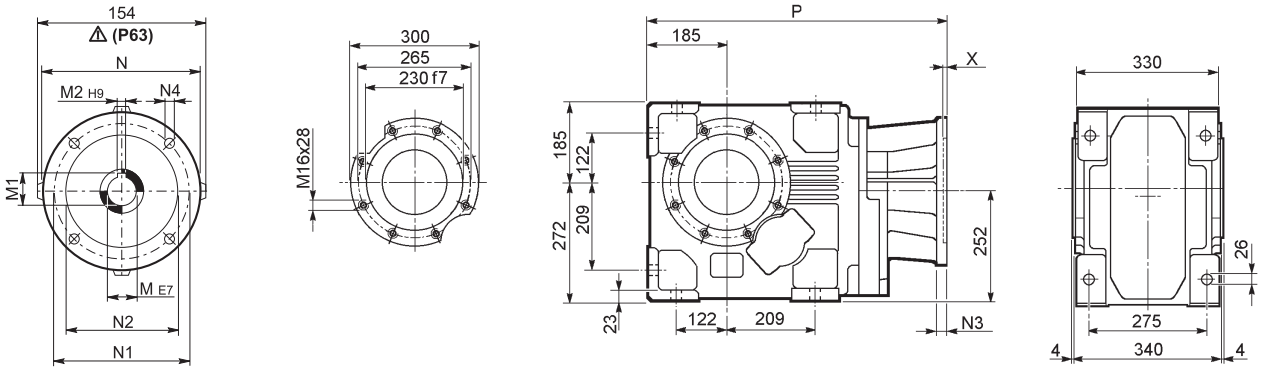

		M	M1	M2	N	N1	N2	N3	N4	X	P	Kg
A 80 3	**P80**	19	21.8	6	200	165	130	—	M10x12	4	602	243
A 80 3	**P90**	24	27.3	8	200	165	130	—	M10x12	4	602	243
A 80 3	**P100**	28	31.3	8	250	215	180	—	M12x16	4.5	612	245
A 80 3	**P112**	28	31.3	8	250	215	180	—	M12x16	4.5	612	245
A 80 3	**P132**	38	41.3	10	300	265	230	16	14	5	648.5	253
A 80 3	**P160**	42	45.3	12	350	300	250	23	18	6	704	268
A 80 3	**P180**	48	51.8	14	350	300	250	23	18	6	704	268
A 80 3	**P200**	55	59.3	16	400	350	300	—	M16x25	7	729	279
A 80 3	**P225**	60	64.4	18	450	400	350	25	18	6	774.5	298
A 80 4	**P63**	11	12.8	4	140	115	95	—	M8x19	4	645.5	248
A 80 4	**P71**	14	16.3	5	160	130	110	—	M8x16	4.5	645.5	248
A 80 4	**P80**	19	21.8	6	200	165	130	—	M10x12	4	665	249
A 80 4	**P90**	24	27.3	8	200	165	130	—	M10x12	4	665	249
A 80 4	**P100**	28	31.3	8	250	215	180	—	M12x16	4.5	675	250
A 80 4	**P112**	28	31.3	8	250	215	180	—	M12x16	4.5	675	250
A 80 4	**P132**	38	41.3	10	300	265	230	16	M12x16	5	711.5	259

A 80...HS

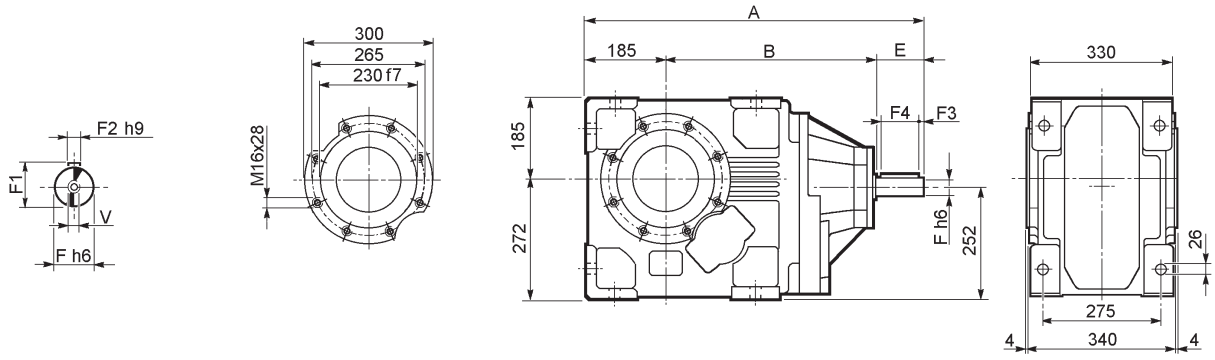

		A	B	E	F	F1	F2	F3	F4	V	Kg
A 80 3	**HS**	786.5	491.5	110	42	45	12	10	90	M12x28	265
A 80 4		735	500	50	24	27	8	2.5	45	M8x19	250

A 80

A 80...UR

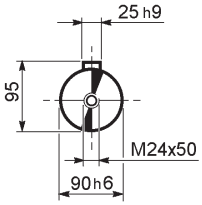

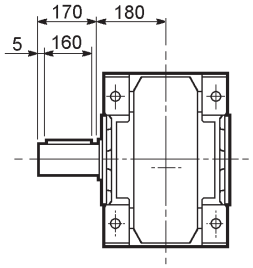

A 80...UD

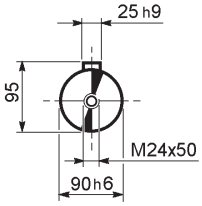

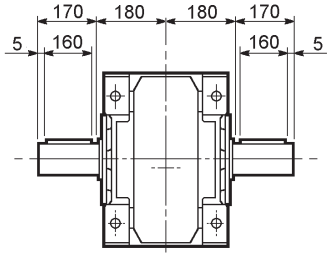

A 80...UH

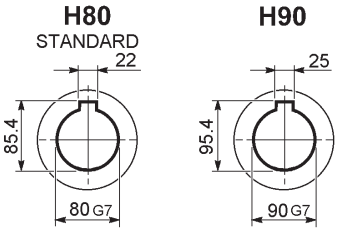

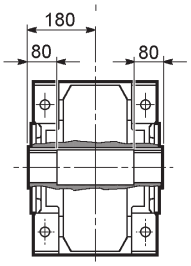

A 80...US

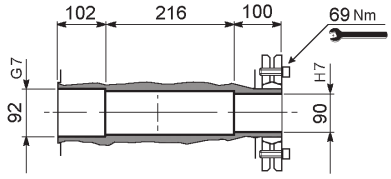

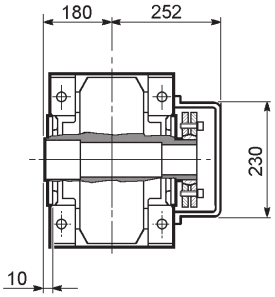

A 80...F...

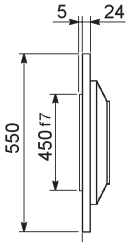

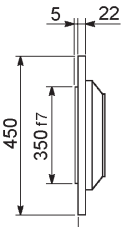

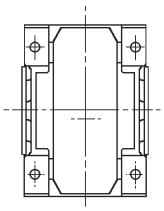

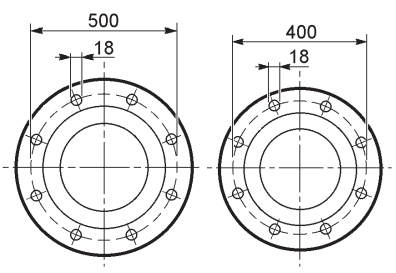

B **A**

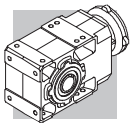

A 90...M/ME/MX

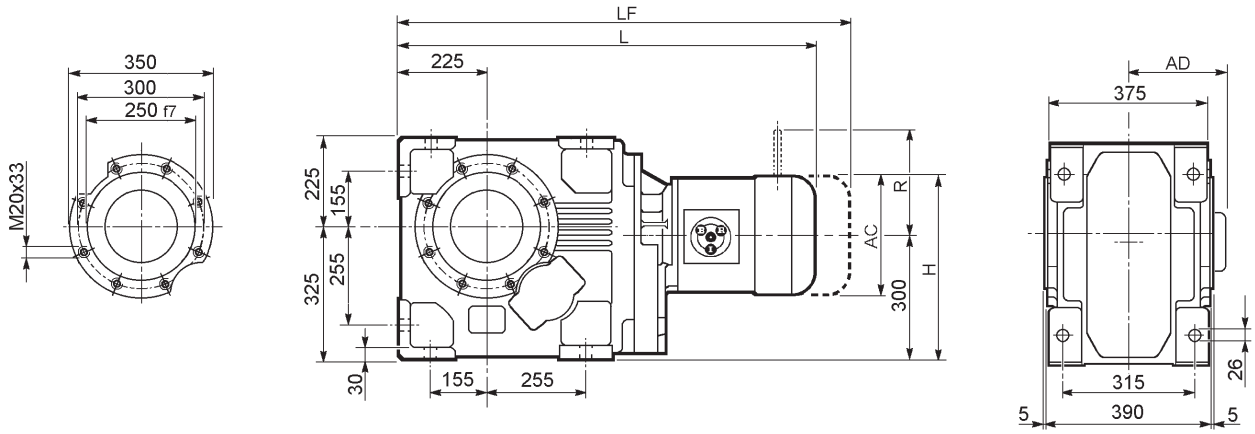

									M...FD M...FA		M...FD		M...FA	
				AC	H	L	AD	Kg	LF	Kg	R	AD	R	AD
A 90 3	**S3**	**ME3S**		195	397.5	930.5	142	414.5	—	—	—	—	—	—
A 90 3	**S3**	**ME3L**		195	397.5	962.5	142	420	—	—	—	—	—	—
A 90 3	**S4**	**ME4**	**MX4**	258	429	1070.5	193	454	—	—	—	—	—	—
A 90 3	**S4**	**ME4LB**	**MX4LA**	258	429	1105.5	193	462	—	—	—	—	—	—
A 90 3	**S5**	**ME5S**	**MX5S**	310	455	1157	245	482	—	—	—	—	—	—
A 90 3	**S5**	**ME5L**	**MX5L**	310	455	1201	245	498	—	—	—	—	—	—
A 90 4	**S1**	**M1**		138	369	941.5	108	412	1002.5	249	103	135	124	108
A 90 4	**S2**	**M2S**		156	378	970.5	119	422	1040.5	426	129	146	134	119
A 90 4	**S2**	**ME2S**		156	378	970.5	119	422	—	—	—	—	—	—
A 90 4	**S3**	**ME3S**		195	397.5	1013.5	142	428.5	—	—	—	—	—	—
A 90 4	**S3**	**ME3L**		195	397.5	1045.5	142	434	—	—	—	—	—	—
A 90 4	**S4**	**ME4**	**MX4**	258	429	1153.5	193	468	—	—	—	—	—	—
A 90 4	**S4**	**ME4LB**	**MX4LA**	258	429	1188.5	193	476	—	—	—	—	—	—

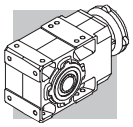

A 90...P (IEC)

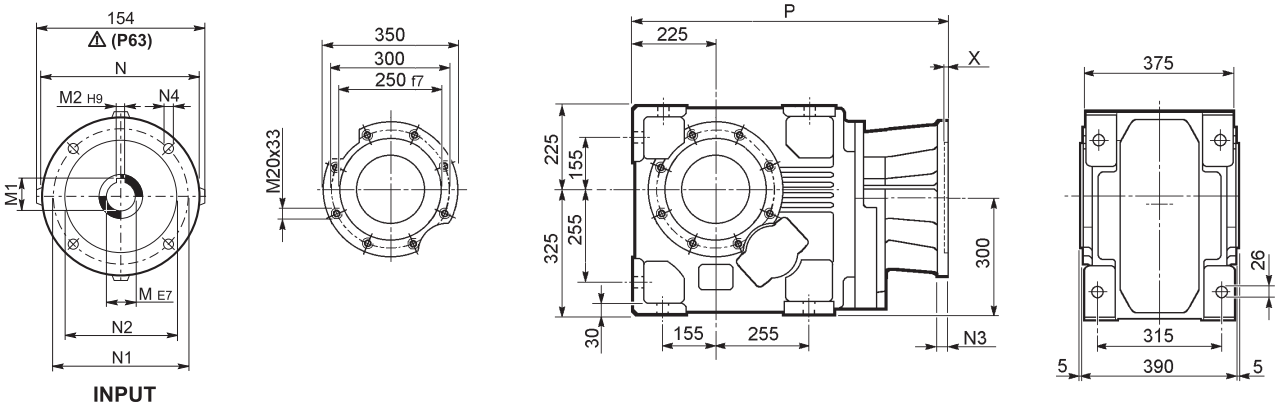

		M	M1	M2	N	N1	N2	N3	N4	X	P	Kg
A 90 3	**P80**	19	21.8	6	200	165	130	—	M10x12	4	723	400
A 90 3	**P90**	24	27.3	8	200	165	130	—	M10x12	4	723	400
A 90 3	**P100**	28	31.3	8	250	215	180	—	M12x16	4.5	733	401
A 90 3	**P112**	28	31.3	8	250	215	180	—	M12x16	4.5	733	401
A 90 3	**P132**	38	41.3	10	300	265	230	16	14	5	769.5	409
A 90 3	**P160**	42	45.3	12	350	300	250	23	18	6	825	428
A 90 3	**P180**	48	51.8	14	350	300	250	23	18	6	825	429
A 90 3	**P200**	55	59.3	16	400	350	300	—	M16x25	7	850	436
A 90 3	**P225**	60	64.4	18	450	400	350	30	18	6	895.5	472
A 90 3	**P250**	65	69.4	18	550	500	450	30	18	6	925.5	475
A 90 4	**P63**	11	12.8	4	140	115	95	—	M8x19	4	786.5	411
A 90 4	**P71**	14	16.3	5	160	130	110	—	M8x16	4.5	786.5	412
A 90 4	**P80**	19	21.8	6	200	165	130	—	M10x12	4	806	413
A 90 4	**P90**	24	27.3	8	200	165	130	—	M10x12	4	806	413
A 90 4	**P100**	28	31.3	8	250	215	180	—	M12x16	4.5	816	415
A 90 4	**P112**	28	31.3	8	250	215	180	—	M12x16	4.5	816	415
A 90 4	**P132**	38	41.3	10	300	265	230	16	14	5	852.5	423
A 90 4	**P160**	42	45.3	12	350	300	250	23	18	5.5	903	434
A 90 4	**P180**	48	51.8	14	350	300	250	23	18	5.5	903	434

A 90...HS

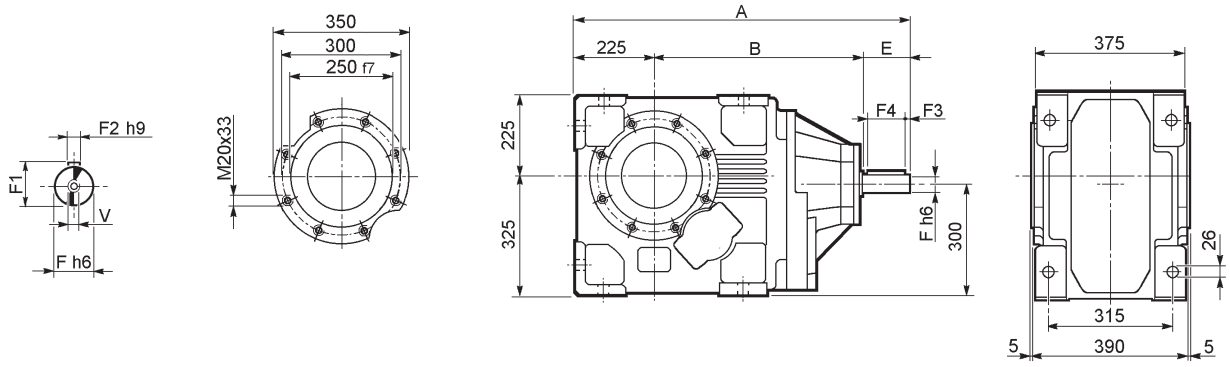

		A	B	E	F	F1	F2	F3	F4	V	Kg
A 90 3	**HS**	1009	644	140	60	64	18	10	120	M16x36	465
A 90 4		875.5	600.5	50	24	27	8	2.5	45	M8x19	415

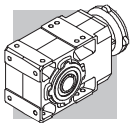

A 90

A 90...UR

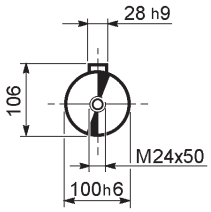

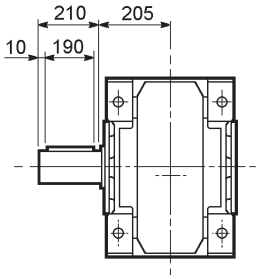

A 90...UD

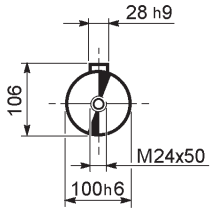

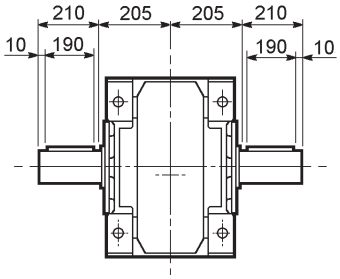

A 90...UH

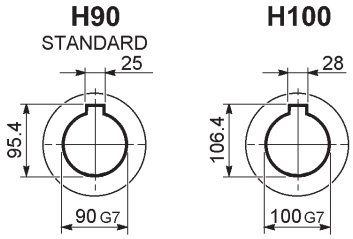

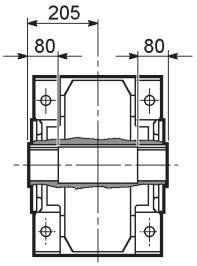

A 90...US

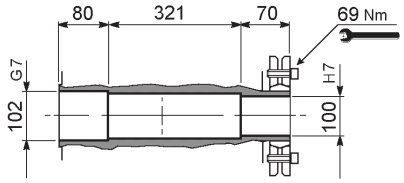

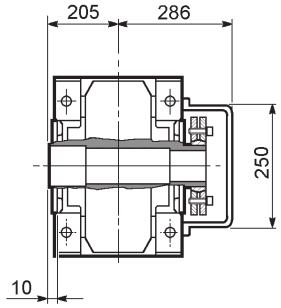

A 90...F...

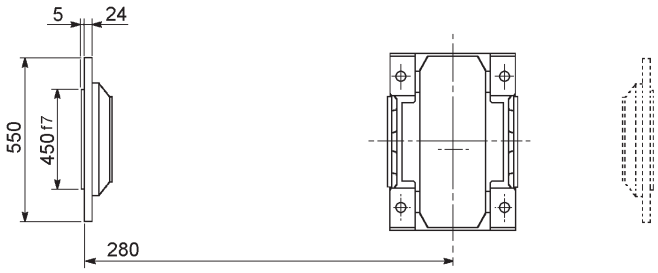

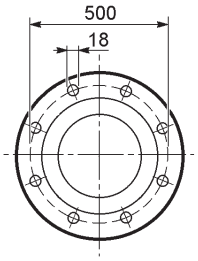

A

45 ZUBEHÖR

45.1 Einsteck - Abtriebswelle

Für Getriebe Größe A 05 sind Steckwellen inklusive Sicherungsring, Unterlegscheiben und Passfedern als einseitige (**Kit A 05 einseitige Steckwelle**) oder zweiseitige (**Kit A 05 zweiseitige Steckwelle**) Ausführung verfügbar.

Die Montage kann auf der rechten oder linken Seite erfolgen und erfordert kein spezielles Werkzeug.

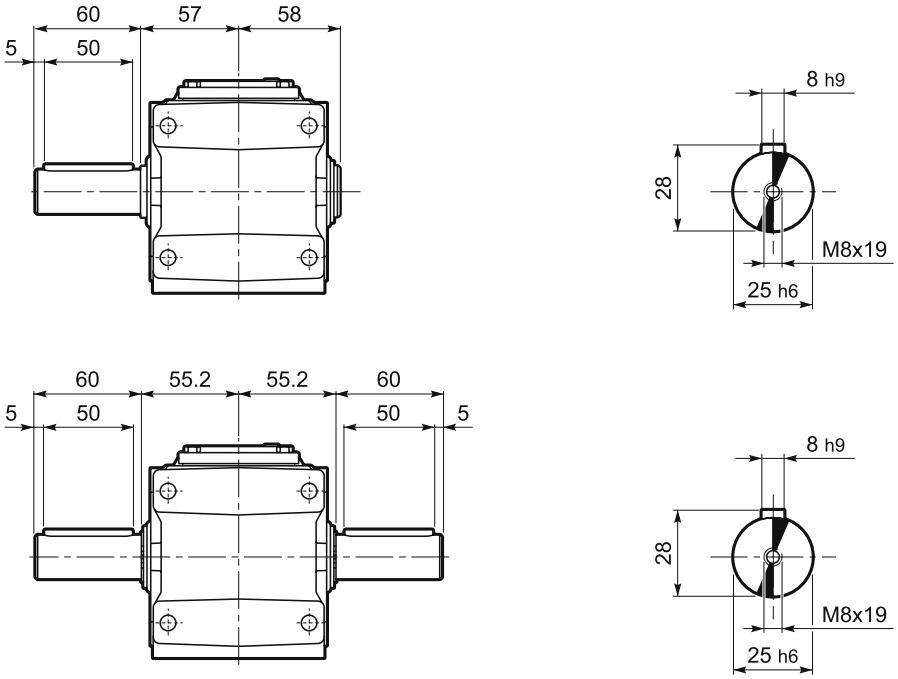

45.2 Schutzdeckel

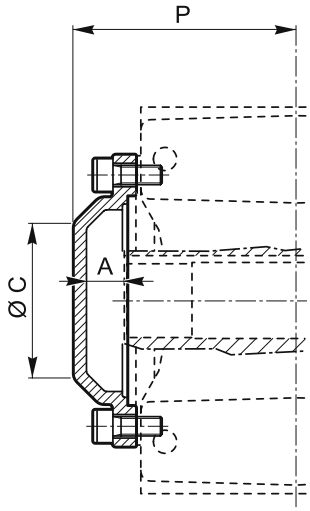

	A	Ø C	P
A 05	17.5	36	73.5
A 10	20.5	60	84.5
A 20	20	75	94
A 30	20	75	104
A 35	19.5	80	114
A 41	21	110	120
A 50	26	100	148.5
A 55	27	100	149
A 60	25	100	158
A 70	33.5	120	193.5
A 80	38	140	228
A 90	43	152	258

45.3 Drehmomentstütze

Mit der Drehmomentstütze wird die entsprechende Befestigungsschrauben mitgeliefert.

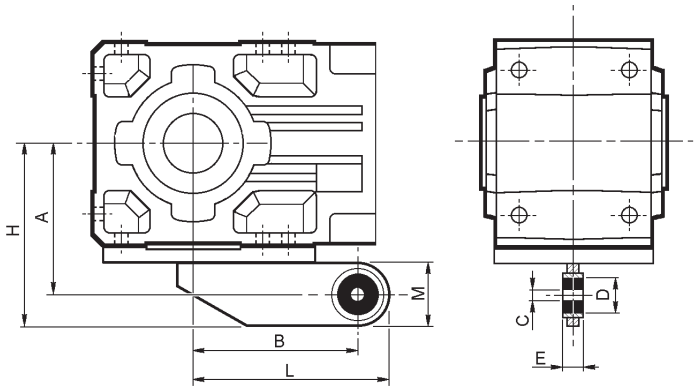

	A	B	C	D	E	H	L	M
A 05	90.5	80	10	30	20	115.5	105	50
A 10	108	118	10	30	20	138	148	60
A 20	118	137	10	30	20	148	167	60
A 30	135	150	20	40	25	170	185	70
A 35	145	165	20	40	25	180	200	70
A 41	157	200	20	40	25	192	235	70
A 50	200	250	32	56	40	245	295	90
A 55	200	250	32	56	40	245	295	90
A 60	225	300	32	56	40	270	345	90

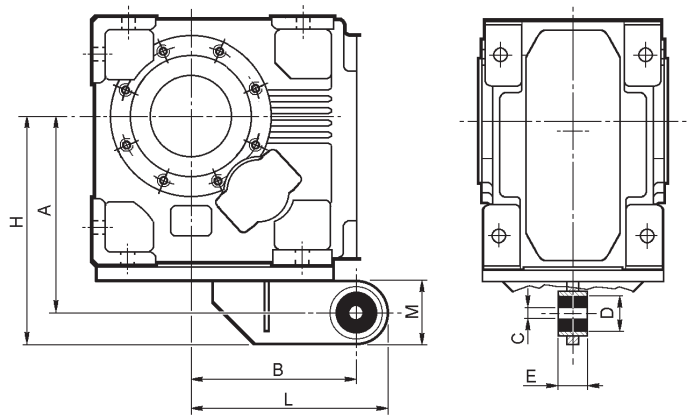

	A	B	C	D	E	H	L	M
A 70	289	250	32	56	40	334	295	90
A 80	357	300	42	78	60	422	365	130
A 90	410	350	42	78	60	475	415	130

46 MASCHINACHSE

Die angetriebene und mit dem Getriebe verbundene Welle sollte aus hochwertigem Stahl gemäß den Abmessungen der Tabelle gefertigt werden.

Darüber hinaus sollte die Welle axial gesichert werden, siehe folgendes Beispiel. Hierbei die einzelnen Komponenten in Abhängigkeit der verschiedenen Anwendungserfordernisse überprüfen und dimensionieren.

UH_

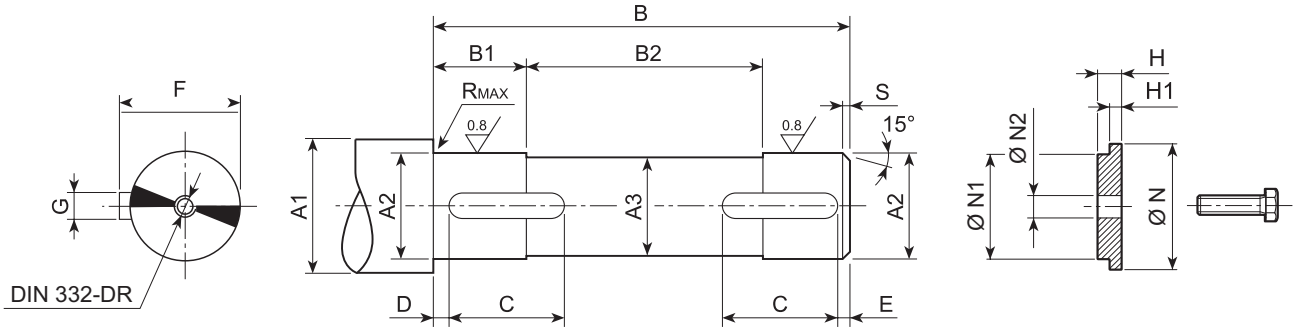

	A1	A2	A3	B	B1	B2	C	D	E	F	G	R	S	UNI 6604	N	N1	N2	H	H1	UNI 5739
A05 UH25	≥ 30	25 h7	24	102	21	62	20	2	2	28	8 h9	0.5	1.5	8x7x20 A	35	25 d9	9	7	5.5	M8x25
A10 UH30	≥ 35	30 h7	29	118	16	87	20	2	2	33	8 h9	0.5	1.5	8x7x20 A	35	30 d9	11	8.5	7	M10x30
A10 UH25	≥ 30	25 h7	24	118	16	87	20	2	2	28	8 h9	0.5	1.5	8x7x20 A	30÷35	25 d9	9	7	5.5	M8x25
A20 UH35	≥ 42	35 h7	34	138	20	98	20	2	2	38	10 h9	0.5	1.5	10x8x20 A	42	35 d9	11	8.5	7	M10x30
A20 UH30	≥ 35	30 h7	29	138	20	98	25	2	2	33	8 h9	0.5	1.5	8x7x25 A	35÷42	30 d9	11	8.5	7	M10x30
A30 UH40	≥ 47	40 h7	39	158	23	112	30	2	2	43	12 h9	0.5	1.5	12x8x30 A	47	40 d9	14	8.5	7	M12x35
A30 UH35	≥ 42	35 h7	34	158	23	112	30	2	2	38	10 h9	0.5	1.5	10x8x30 A	42÷47	35 d9	11	8.5	7	M10x30
A35 UH40	≥ 47	40 h7	39	175	33	109	40	2	2	43	12 h9	1	1.5	12x8x40 A	47	40 d9	14	8.5	7	M12x35
A35 UH35	≥ 42	35 h7	34	175	33	109	40	2	2	38	10 h9	1	1.5	10x8x40 A	42÷47	35 d9	11	8.5	7	M10x30
A41 UH45	≥ 52	45 h7	44	184	28	128	45	2.5	2.5	48.5	14 h9	1	2	14x9x45 A	52	45 d9	14	8.5	7	M12x35
A41 UH40	≥ 47	40 h7	39	184	28	128	50	2.5	2.5	43	12 h9	1	2	12x8x50 A	47÷52	40 d9	14	8.5	7	M12x35
A50 UH55	≥ 63	55 h7	54	226	37.5	151	55	2.5	2.5	59	16 h9	1	2	16x10x55 A	63	55 d9	22	10	8	M20x50
A50 UH50	≥ 57	50 h7	49	226	37.5	151	65	2.5	2.5	53.5	14 h9	1	2	14x9x65 A	57÷63	50 d9	18	10	8	M16x45
A55 UH60	≥ 70	60 h7	59	226	37.5	151	65	2.5	2.5	64	18 h9	2	2	18x11x65 A	70	60 d9	22	10	8	M20x50
A55 UH50	≥ 60	50 h7	49	226	37.5	151	75	2.5	2.5	53.5	14 h9	2	2	14x9x75 A	60÷70	50 d9	18	10	8	M16x45
A60 UH70	≥ 78	70 h7	69	248	48	152	70	2.5	2.5	74.5	20 h9	2.5	2	20x12x70 A	78	70 d9	22	10	8.5	M20x50
A60 UH60	≥ 68	60 h7	59	248	48	152	80	2.5	2.5	64	18 h9	2.5	2	18x11x80 A	68÷78	60 d9	22	10	8.5	M20x50
A70 UH80	v89	80 h7	79	303	58	187	90	3	3	85	22 h9	2.5	2.5	22x14x90 A	89	80 d9	22	10	8.5	M20x50
A70 UH70	≥ 78	70 h7	69	303	58	187	110	3	3	74.5	20 h9	2.5	2.5	20x12x110 A	78÷89	70 d9	22	10	8.5	M20x50
A80 UH90	≥ 99	90 h7	89	358	78	202	120	3	3	95	25 h9	2.5	2.5	25x14x120 A	99	90 d9	26	22	20.5	M24x70
A80 UH80	≥ 89	80 h7	79	358	78	202	130	3	3	85	22 h9	2.5	2.5	22x14x130 A	89÷99	80 d9	22	10	8.5	M20x50
A90 UH100	≥ 111	100 h7	99	408	78	252	160	3	3	106	28 h9	2.5	2.5	28x16x160 A	111	100 d9	26	22	20.5	M24x70
A90 UH90	≥ 99	90 h7	89	408	78	252	190	3	3	95	25 h9	2.5	2.5	25x14x190 A	99÷111	90 d9	26	22	20.5	M24x70

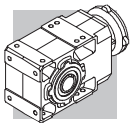

US

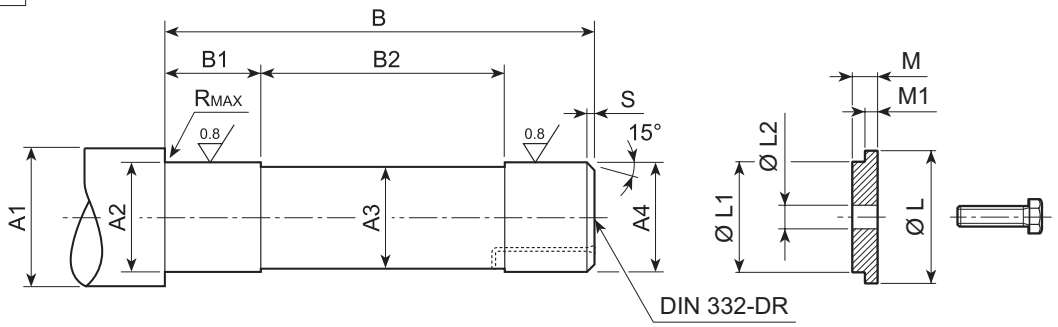

	A1	A2	A3	A4	B	B1	B2	R	S	L	L1	L2	M	M1	UNI 5739
A 05	≥ 35	27 h7	24	25 h6	129.5	32	63.5	0.5	1.5	29.5	25 d9	11	8.5	7	M10x30
A 10	≥ 42	32 h7	29	30 h6	147.5	34	77.5	0.5	1.5	35.5	30 d9	11	8.5	7	M10x30
A 20	≥ 48	37 h7	34	35 h6	170	40	89	0.5	1.5	43	35 d9	14	8.5	7	M12x35
A 30	≥ 54	42 h7	39	40 h6	191.5	48	95.5	0.5	1.5	49	40 d9	18	10	8.5	M16x45
A 35	≥ 54	42 h7	39	40 h6	208.5	48	112.5	0.5	1.5	49	40 d9	18	10	8.5	M16x45
A 41	≥ 60	47 h7	44	45 h6	222	53	117	1	2	54	45 d9	18	10	8.5	M16x45
A 50	≥ 72	57 h7	54	55 g6	264	46	156	1	2	72	55 d9	22	10	8.5	M20x50
A 55	≥ 72	62 h7	59	60 g6	266	46	158	2.5	2	72	60 d9	22	10	8.5	M20x50
A 60	≥ 90	72 h7	69	70 g6	293	48	178	2.5	2.5	85	70 d9	22	10	8.5	M20x50
A 70	≥ 104	82 h7	79	80 g6	352.5	90	172.5	2.5	2.5	95	80 d9	22	10	8.5	M20x50
A 80	≥ 114	92 h7	89	90 g6	416	100	216	2.5	2.5	105	90 d9	26	22	20.5	M24x70
A 90	≥ 126	102 h7	99	100 g6	469	78	321	2.5	2.5	120	100 d9	26	22	20.5	M24x70

UV

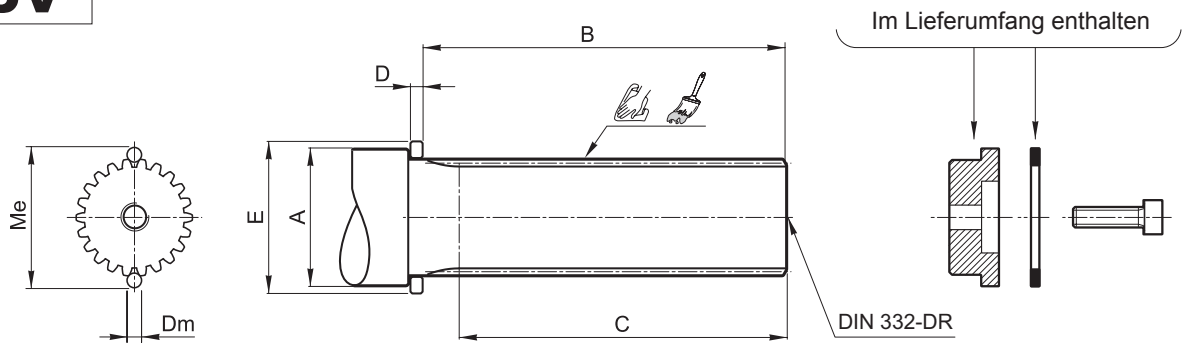

	DIN 5480	Me	Dm	A	B	C	D	E	ISO 4762
A 20	30x1.25x22	33.04 +0/-0.04	2.75	≥ 40	111.5	≥ 95	7	45	M10x35
A 30	35x2x16	38.93 +0/-0.04	4	≥ 45	130.5	≥ 112	7	50	M12x40
A 35	35x2x16	38.93 +0/-0.04	4	≥ 45	147.5	≥ 129	7	50	M12x40
A 41	45x2x21	48.86 +0/-0.04	4	≥ 55	155.5	≥ 136	7	60	M16x45
A 50	50x2x24	54.14 +0/-0.05	4	≥ 60	196	≥ 175	7	65	M16x45
A 55	50x2x24	54.14 +0/-0.05	4	≥ 60	196	≥ 175	7	65	M16x45
A 60	65x2x31	68.97 +0 /-0.05	4	≥ 75	213.5	≥ 191	7	80	M20x55

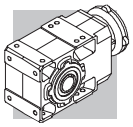

QF

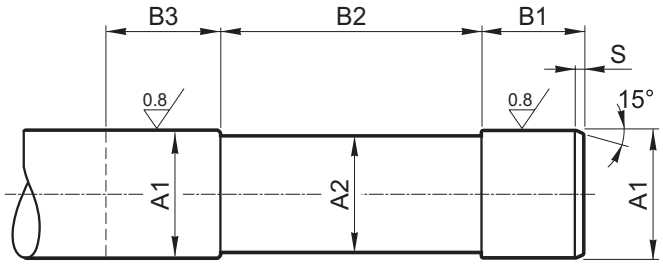

		A1	A2	B1	B2	B3	S
A 10	**QF25**	25 h6	24	41	95	≥ 50	1.5
	QF30	30 h6	29				
A 20	**QF25**	25 h6	24	41	115	≥ 50	1.5
	QF30	30 h6	29				
A 30	**QF35**	35 h6	34	45	130	≥ 54	1.5
	QF40	40 h6	39				
A 35	**QF35**	35 h6	34	45	146.5	≥ 54	1.5
	QF40	40 h6	39				
A 41	**QF40**	40 h6	39	47	151.5	≥ 56	2
	QF45	45 h6	44				
A 50	**QF50**	50 h6	49	48	197	≥ 57	2
	QF55	55 h6	54				
A 55	**QF55**	55 h6	54	50	190	≥ 59	2
	QF60	60 h6	59				
A 60	**QF60**	60 h6	59	57	203	≥ 66	2.5
	QF65	65 h6	64				
	QF70	70 h6	69				

47 BESCHREIBUNG DER ATEX-ZULASSUNG

47.1 Explosionsgefährdeter bereich

Im Sinne der Richtlinie 94/9/EG ist eine **explosionsfähige Atmosphäre** definiert als ein Gemisch:

a. aus **brennbaren Stoffen** in Form von Gasen, Dämpfen, Nebeln oder Stäuben;
b. und **Luft**;
c. unter atmosphärischen Bedingungen;
d. in dem sich der Verbrennungsvorgang nach erfolgter Entzündung auf das gesamte unverbrannte Gemisch überträgt (zu beachten ist, dass (hauptsächlich bei Vorliegen von Staub) nicht immer die gesamte Menge an brennbarem Material verbrennt).

Eine Atmosphäre, die aufgrund der örtlichen und/oder betrieblichen Bedingungen explosionsfähig werden kann, wird als **explosionsgefährdeter Bereich** bezeichnet. Nur für diese Art von explosionsgefährdetem Bereich sind die Produkte, die unter die Richtlinie 94/9/EG fallen, ausgelegt.

47.2 Harmonisierte europäische atex-normen

Die Europäische Union hat bezüglich der Unversehrtheit und der Sicherheit am Arbeitsplatz zwei harmonisierte Leitrichtlinien erlassen. Diese Richtlinien sind als “ATEX 95” und “ATEX 137” bekannt.

Die europäische Richtlinie “ATEX 95” (EU/94/9/EG) beschreibt die wesentlichen Sicherheitsanforderungen zur bestimmungsgemäßen Verwendung von Produkten in explosionsgefährdeten Bereichen innerhalb der Mitgliedsstaaten der Europäischen Union. Diese Richtlinie weist die Geräte außerdem bestimmten, von der Richtlinie selbst festgelegten **Kategorien** zu.

Die europäische Richtlinie “ATEX 137” (EU/99/92/EG) setzt die Mindestanforderungen im Bereich Sicherheit und des Gesundheitsschutzes im Arbeitsbereich für Arbeitnehmer fest, die den Risiken einer explosionsfähige Atmosphäre durch die Arbeitsbedingungen und die Handhabung von Produkten und Substanzen ausgesetzt sind. Diese Richtlinie unterteilt außerdem die Arbeitsbereiche in **Zonen** und legt die Verwendungskriterien für die **Gerätekategorien** in diesen Zonen fest. Es folgt eine Darstellung der **Zonen,** in die der Betreiber eines Betriebs mit potentiell explosionsfähiger Atmosphäre die Verwendungsbereiche der Geräte unterteilen muss.

(C 1)

Zonen		Häufigkeit, mit der sich potentiell explosionsfähige Atmosphäre bildet	Art der Gefahr
Gasförmige Atmosph. G	Staubförmige Atmosph. D		
0	20	Konstante Präsenz oder lang andauernde Präsenz	Permanent
1	21	Gelegentlich bei normalem Betrieb	Potentiell
2	22	Sehr selten und/oder kurzzeitig bei normalem Betrieb	Minimal

Die Getriebe der Produktion BONFIGLIOLI RIDUTTORI aus dem vorliegenden Katalog können in den Zonen 1, 21 installiert werden.

Unser Getriebe Können auch in den Zonen 2, 22 installiert werden. Für weitere technische Informationen wenden Sie bitte an unseren Technischen Service.

Ab dem 1. Juli 2003 gelten die ATEX-Richtlinien zwingen auf gesamten Gebiet der Europäischen Union und ersetzen die bis dahin geltenden nationalen und europäischen Gesetze zu explosionsfähiger Atmosphäre. Es gilt zu unterstreichen, dass die Richtlinien zum ersten Mal auch mechanische, hydraulische und pneumatische Geräte mit einschließen und nicht wie bisher nur elektrische Geräte. In Bezug auf die Rechts- und Verwaltungsvorschriften der Mitgliedstaaten für Maschinen 2006/42/EG muss präzisiert werden, dass die europäische Richtlinie 94/9/EG in Bezug auf die von potentiell explosionsfähiger Atmosphäre ausgehenden Gefahren sehr spezifische und detaillierte Angaben macht, während die Rechts- und Verwaltungsvorschriften der Mitgliedstaaten für Maschinen in Bezug auf Sicherheit bei Explosionsrisiken nur sehr allgemeine Angaben enthält (Anhang I). Zum Schutz vor Explosionen in potentiell explosionsfähiger Atmosphäre gilt jedoch vorrangig die europäische Richtlinie 94/9/EG (“ATEX 95”), die angewandt werden muss. Für alle weiteren Risiken, die von Geräten ausgehen können, müssen außerdem auch die Rechts- und Verwaltungsvorschriften der Mitgliedstaaten für Maschinen angewendet werden.

47.3 Schutzgrade für die verschiedenen gerätekategorien

Die verschiedenen Gerätekategorien müssen gemäß der vom Betreiber festgesetzten Betriebsparameter bei verschiedenen Schutzgraden betrieben werden können.
Die Verfügbarkeit der BONFIGLIOLI RIDUTTORI Produkte ist erneut grau hervorgehoben.

(C 2)

Schutzgrad	Kategorie		Schutzart	Betriebsbedingungen
	Gruppe I	Gruppe II		
Sehr hoch	M1		Zwei unabhängige Schutzmaßnahmen bzw. auch dann sicher, wenn zwei Fehler unabhängig voneinander auftreten.	Die Geräte bleiben bei vorhandener explosionsfähiger Atmosphäre weiter einsatzbereit und werden weiter betrieben.
Sehr hoch		**1**	Für normalen Betrieb und erschwerte Betriebsbedingungen geeignet.	Geräte bleiben in den Zonen 0, 1, 2 (G) und 20, 21, 22 (D) weiter einsatzbereit und werden weiter betrieben.
Hoch	M2		Im normalen Betrieb und bei üblicherweise auftretenden Fehlern sicher.	Geräte werden bei vorhandener potentiell explosionsfähiger Atmosphäre ausgeschaltet.
Hoch		**2**	Im normalen Betrieb sicher.	Geräte bleiben in den Zonen 1, 2 (G) und 21, 22 (D) weiter einsatzbereit und werden weiter betrieben.
Normal		**3**	Protezione adatta al funzionamento normale.	Geräte bleiben in den Zonen 2 (G) und 22 (D) weiter einsatzbereit und werden weiter betrieben.

47.4 Bestimmung der gruppen

Gruppe I Gilt für Geräte zur Verwendung in Untertagebetrieben von Bergwerken und deren Übertageanlagen, die durch Grubengas und/oder brennbare Stäube gefährdet werden können.

Gruppe II Gilt für Geräte zur Verwendung in den übrigen Bereichen, die durch eine explosionsfähige Atmosphäre gefährdet werden können.

BONFIGLIOLI RIDUTTORI Produkte dürfen nicht im Bergbau, der nach **Gerätegruppe I** und **II**, Kategorie 1, klassifiziert ist eingesetzt werden.

Die Festlegung der Geräte in Gerätegruppen, -kategorien und in Zonen wird daher in der folgenden Darstellung illustriert. Die Verfügbarkeit der BONFIGLIOLI RIDUTTORI Produkte ist erneut grau hervorgehoben.

(C 3)

Gruppe	**I** Bergwerke, Grubengas		**II** Weitere potentiell explosionsgefährdete Bereiche aufgrund von Gas- oder Staubvorkommnissen					
Kategorie	M1	M2	1		2		3	
Atmosphäre (1)			G	D	G	D	G	D
Zone			0	20	1	21	2	22
Schutzart Getriebe					c, k	c, k		

(1) **G** = Gas **D** = Staub

Dieser Katalog beschreibt die BONFIGLIOLI RIDUTTORI **Getriebe**, die für die Verwendung in explosionsgefährdeten Bereichen, nach Kategorie 2, vorgesehen sind.

Die hier beschriebenen Produkte entsprechen den Mindestanforderungen der europäischen Richtlinie 94/9/EG, die Teil der unter dem Namen ATEX (ATmosphères EXplosibles) bekannten Richtlinien sind.

47.5 Konformitätserklärung

Das Konformitätszertifikat garantiert die Konformität des Produkts mit der Richtlinie 94/9/EG.
Die Gültigkeit des Zertifikats hängt vom Einhalten der Anweisungen zum sicheren Betrieb des Produktes in all seinen Betriebsphasen ab, die in der Betriebs-, Installations- und Wartungsanleitung nachzulesen sind.
Der Betreiber kann sich selbige auf der Website www.bonfiglioli.com downloaden, wo die Anleitung in verschiedenen Sprachen in PDF-Format zur Verfügung steht.
Dabei sind vor allem die Umgebungsbedingungen zu berücksichtigen. Deren Nichteinhalten während des Betriebs kann zum Verfall der Zertifikatsgültigkeit führen.
Bei Zweifeln bezüglich der Gültigkeit des Konformitätszertifikats kontaktieren Sie bitte den Technischen Kunden- und Handelsservice von BONFIGLIOLI RIDUTTORI.

48 ANTRIEBSAUSWAHL

Um die Getriebe und Getriebe vorbereitet für IEC-motor richtig auszuwählen zu können, muß man über einige grundlegende Daten verfügen, die wir in der folgende Tabelle (A6) zusammengefaßt haben. Eine Kopie dieses Formulars durch den Kunden Tabelle gefüllt ist, um unser Service Center gesendet werden, der dann die für die gewünschte Anwendung geeignete Auslegung wählt.

(C 4)

Bonfiglioli power, control and green solutions	ERFORDERLICHE TECHNISCHE DATEN ZUR ANTRIEBSAUSLEGUNG VON GETRIEBEN SERIE A	Nr:	
		Datum:	
		Rev_	Datum:

		A)	*ALGEMEINE DATEN*				
#	1		Firma / Kunde				
#	2		Kontakt				
#	3		Branche / Händler				
#	4		Bestellmenge				
	5		Lieferzeit				
		B_1)	*ELEKTRISCHER MOTOR*				
	6		Motor Typ				
#	7	P_{n1}	Nennleistung Motor		[kW]		
#	8	P_{r1}	Erforderliche Motorleistung		[kW]		
	9	n_1	Eingangsdrehzahl		[min^{-1}]		
	10		Polzahl				
		C)	*GETRIEBE*				
#	11		Getriebekonfiguration				
#	12	i	Untersetzung				
#	13	n_1	Eingangsdrehzahl		[min^{-1}]		
#	14	M_{r2}	Erforderliches Abtriebsmoment		[Nm]		
#	15	f_S	Erfoderlicher Betriebsfaktor				
	16		Drehrichtung der Abtriebswelle [Blickrichtung auf Abtriebswelle]:	**CW**	**CCW**		
#	17	L_{10H}	Lagerlebensdauer		[h]		
	18		Verzahnungslebensdauer		[h]		
	19	SF_{min}	Sicherheit Zahnfussfestigkeit		Bezugswert (ISO bevorzugt)		
	20	SH_{min}	Sicherheit Flankfestigkeit		Bezugswert (ISO bevorzugt)		
		D)	*ZUSÄTZLICHE LASTEN*				
	21	R_{c2}	Radiallast an Abtriebtswelle		[N]	Richtung [°]	
	22	x_2	Lastangriffsangriffspunkt bezogen auf Wellenschulter		[mm]		
	23	R_{c1}	Radiallast an Antriebswelle		[N]	Richtung [°]	
	24	x_1	Lastangriffsangriffspunkt bezogen auf Wellenschulter		[mm]		
	25	A_{n2}	Axiallast an Abtriebswelle (+ / -)		[N]	+ = Druck	
	26	A_{n1}	Axiallast an Antriebswelle (+ / -)		[N]	- = Zug	
		E)	*APPLIKATION*				
#	27		Applikationsart				
	28		Arbeitszyklus	Zeitabschnitt	Getriebeabtriebsmoment	Getriebeabtriebsdrehzahl	
				%	[Nm]	[min^{-1}]	
				,,,,	,,,,		
				,,,,	,,,,		
				,,,,	,,,,		
	29		Notizen zum Arbeitszyklus:				
	30		Auslegung gem. FEM Klasse	T-	L-	M-	
	31		Anzahl Unterbrechungen		[%]		
	32	T_{AMB}	Umgebungstemperatur		[°C]		
#	33		Höhe über N. N.		[m]		
	34		Umgebungsart	enger Innenraum	Großer Innenraum	Aussenbereich	
		F)	NOTIZEN				
	35		Notizen und zusätzliche Kundenanforderungen:				

Pflichtfeld für Auslegung

49 INSTALLATIONS-UND WARTUNGSANLEITUNG

Alle Hinweise für Installation, Betrieb und Wartung des Produktes finden sich in der Benutzerhandbuch.Der Betreiber kann sich selbige auf der Website www.bonfiglioli.com downloaden, wo die Anleitung in verschiedenen Sprachen in PDF-Format zur Verfügung steht. Die Unterlagen müssen an geeigneter Stelle und in der Nähe des Installationsort des Getriebes aufbewart werden, damit alle zur Handhabung des Getriebes Befugten während dessen gesamter Betriebsdauer Zugang dazu haben.lt sein, dass der Motor eine Maximalgeschwindigkeit von (n_1 = 1500 min^{-1}) erreicht, oder das Getriebe überlastet wird.

50 BAULICHE MERKMALE DER ATEX-BAUGRUPPEN

- Ausstattung mit Serviceverschlüssen für die regelmäßige Kontrolle des Schmierstoffstandes.
- Entlüftungsschrauben mit Rückschlagventil anbringen.
- Schmierstoffbefüllung ab Werk (synthetisches Öl), je nach im Auftrag spezifizierter Einbaulage.
- Fluor-Elastomer - Dichtungsringe.
- Keine Kunststoffteile.
- Maschinenschild mit Angabe zu der gemäß 94/9/EG verwendeten Produktkategorie und Schutzart.
- Komponenten einsetzen, die höheren Temperaturen standhalten als den vorgesehenen Grenzwerten.
- Wärmeempfindliche, Messfühler anbringen.

(C 5)

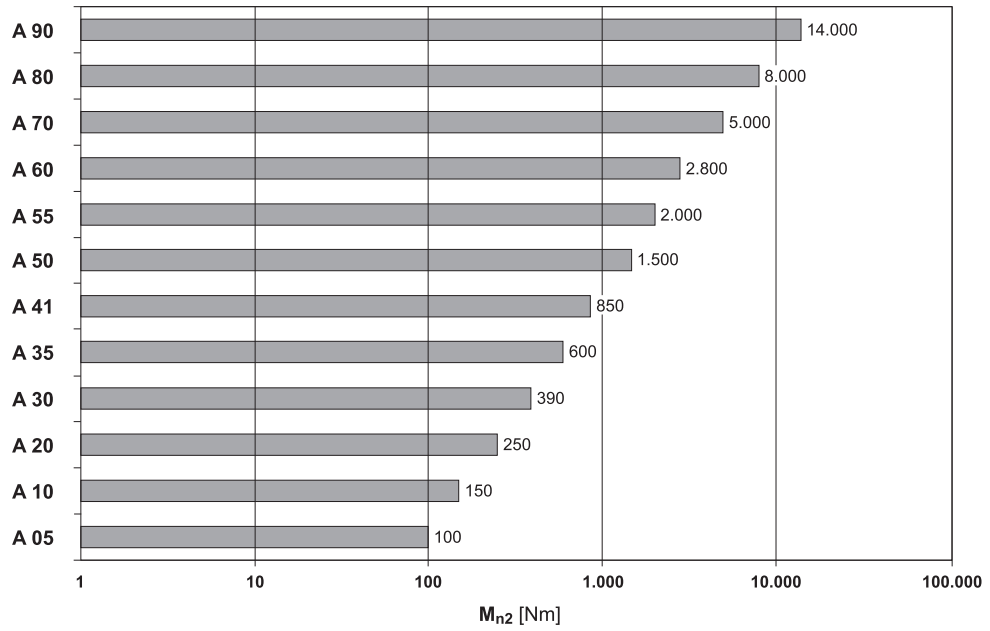

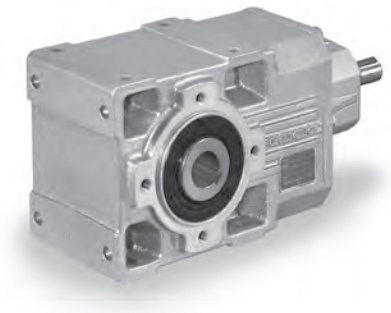

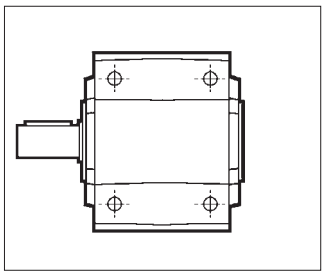

UR

Abtriebswelle mit einem Wellenende

A 10 ... A 90

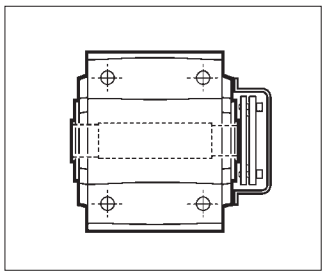

US

Abtriebshohlwelle und Schrumpfscheibe

A 05 ... A 90

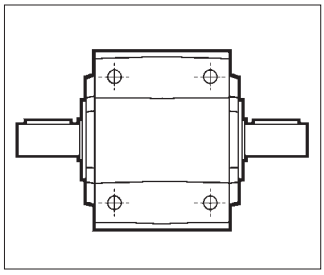

UD

Abtriebswelle mit zwei Wellenenden

A 10 ... A 90

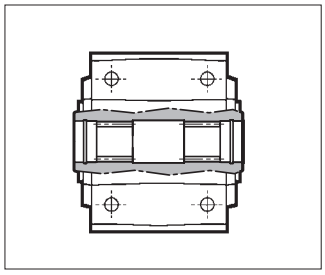

UV

Hohlwelle mit Vielkeilverzahnung DIN 5480

A 20 ... A 60

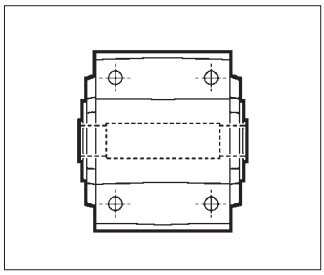

UH

Abtriebshohlwelle mit Passfedernut

A 05 ... A 90

Bauformen mit aufgesetztem Flansc

Die angegebenen Bilder zeigen die den Grundbauformen anbaubaren Flansche und ihre Positionerung (①,②).

UR F1... UR F2...

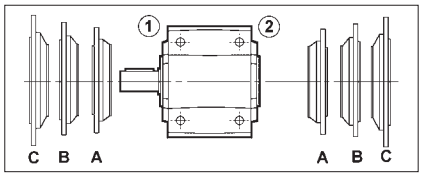

UD F1... UD F2...

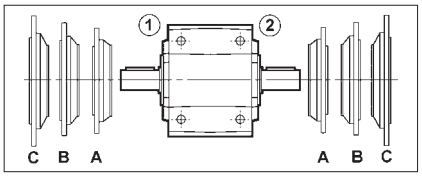

UH... F1... UH... F2...

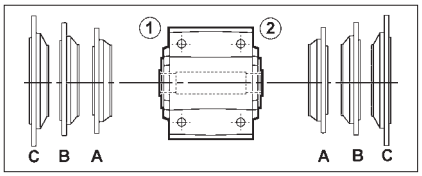

US F1... US F2...

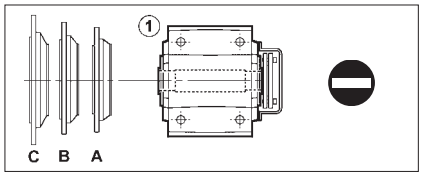

UV F1... UV F2...

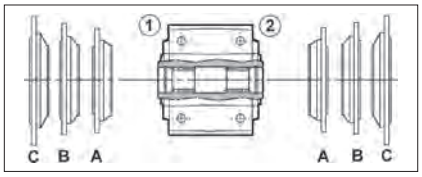

GETRIEBE

A 50 3 UH50 F1A 99.5 S3 HS EX

OPTIONEN

EINBAULAGEN
B3 (Standard), **B6**, **B7**, **B8**, **VA**, **VB**

BEZEICHNUNG DER ANTRIEBSSEITE

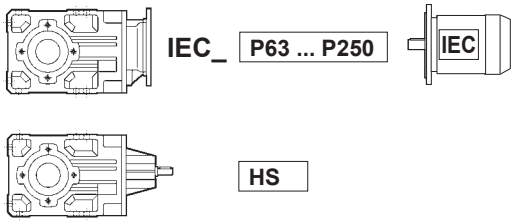

ÜBERSETZUNG

GRÖSSE UND LAGE DES ANTRIEBSFLANSCHS
(angeben nur wenn angefragt)
F = Ausführung mit Flansch
1, **2** = Flanschlage
A, **B**, **C** = Flanschgröße

BAUFORM

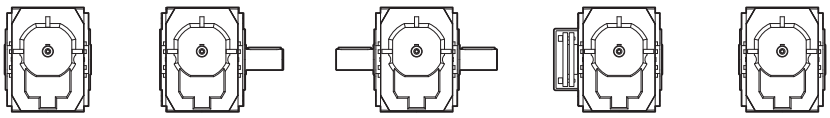

UH_ **UR** (A 10...A 90) **UD** (A 10...A 90) **US** (A 05...A 90) **UV** (A 20...A 60)

A 05	A 10	A 20	A 30	A 35	A 41	A 50	A 55	A 60	A 70	A 80	A 90
UH25	**UH25**	**UH30**	**UH35**	**UH40**	**UH45**	**UH50**	**UH60**	**UH60**	**UH70**	**UH80**	**UH90**
—	UH30	UH35	UH40	UH35	UH40	UH55	UH50	UH70	UH80	UH90	UH100

GETRIEBESTUFEN
2 (A 05...A 60), **3** (A 20...A 90), **4** (A 50...A 90)

GETRIEBEBAUGRÖSSE
05, **10**, **20**, **30**, **35**, **41**, **50**, **55**, **60**, **70**, **80**, **90**

TYP: **A** = Kegelradgetriebe

Getriebe Optionen

EX

Das Getriebe kann in den Zonen 1 und 2 installiert werden (Kategorien 2G und 2D).
Die Temperaturklasse ist T4 (max. 135°C).

NACHWEISE

AC - Konformitätsbescheinigung

Dokument mit dessen Ausstellung die Konformität des Produkts mit dem Auftrag, und dessen Konstruktion in Konformität mit den vom Qualitätsmanagementsystem von Bonfiglioli Riduttori vorgesehenen Standardfertigungs- und -kontrollverfahren bescheinigt wird.

CC – Prüfzeugnis

Die Bestellung führt zur Durchführung von Kontrollen der Konformität mit dem Auftrag, allgemeinen Sichtkontrollen und instrumentalen Prüfungen der Passmaße. Des Weiteren werden allgemeine Betriebskontrollen bei Leerlauf sowie Prüfungen der Funktionalität der Dichtungen bei Stillstand und während des Betriebs durchgeführt. Die Prüfung wird anhand einer Stichprobe des Versandloses durchgeführt.

53 SCHMIERUNG

Die Schmierung der Getriebe von Bonfiglioli erfolgt durch eine Kombination aus Ölbad-und Tauchschmierung. Die Getriebe in ATEX-Version werden, abgesehen von einigen Ausnahmen (siehe Tabelle folgende), in Übereinstimmung mit der angegebenen Einbaulage werkseitig mit einer bestimmten Menge des “Dauerschmiermittels” SHELL OMALA S4 WE 320 befüllt.
Vor der Inbetriebnahme oder beim Befüllen stets den Füllstand nach den Vorgaben in der entsprechenden Installations-, Betriebs- und Wartungsanleitung kontrollieren (die Anleitung ist in verschiedenen Sprachen und im PDF-Format unter der Internetadresse www.bonfiglioli.com verfügbar).

(C 6)

A 05	A 10	A 20	A 30	A 35	A 41	A 50	A 55 (1)	A 60 2 (2)	A 60 3 (1)	A 60 4 (1)	A 70 (1)	A 80 (1)	A 90 (1)

Lieferung mit synthetischem “Dauerschmiermittel” — Lieferung mit synthetischem schmiermittel

(1) Ohne Schmiermittel in den Einbaulagen B6 und B7
(2) Ohne Schmiermittel in den Einbaulagen B6, B7 und VB

Aus Transportgründen werden die Getriebe mit einem geschlossenen Einfüllstopfen geliefert und je nach Version mit einem Verschluss mit Entlüftungsventil versehen, der vor der Inbetriebnahme des Getriebes vom Betreiber ausgetauscht werden muss. Auch in diesem Fall ist die entsprechende Installations-, Betriebs- und Wartungsanleitung einzusehen (die Anleitung ist in verschiedenen Sprachen und im PDF-Format unter der Internetadresse www.bonfiglioli.com verfügbar), um Fehler beim Austausch zu vermeiden.
Auch in den Fällen, in denen das Getriebe ohne Schmiermittel geliefert wird, empfiehlt sich die anschließende Befüllung mit einem Schmieröl des gleichen Typs, von dem verschiedene zugelassene Marken in der entsprechenden Installations-, Betriebs- und Wartungsanleitung aufgeführt sind.
Der Getriebebetrieb ist bei Umgebungstemperaturen im Bereich zwischen -20°C und +40°C

54 WEITERE INFORMATIONEN ÜBER GETRIEBE UND GETRIEBEMOTOREN

Einbaulagen, technische Daten, Motorverfügbarkeiten, Trägheitsmomente und Abmessungen für die **A-EX (Atex)** Serie unterscheiden sich nicht von der Standard-Serie **A**. Alle Informationen sind in den entsprechenden Kapitel des Kataloges zu finden.

55 KONSTRUKTIVE EIGENSCHAFTEN

Die wichtigsten konstruktiven Eigenschaften sind:
- Baueinheitensystem
- Kompaktheit
- universelle Montage
- hohe Wirkungsgrade
- niedriger Geräuschpegel
- einsatzgehärtete und gehärtete Zahnräder aus legiertem Stahl
- Nicht lackierte Aluminiumgehäuse bei den Größen 10, 20 und 25; hochwiderstandsfähige und lackierte Gußgehäuse bei den anderen Größen.

(D 43)

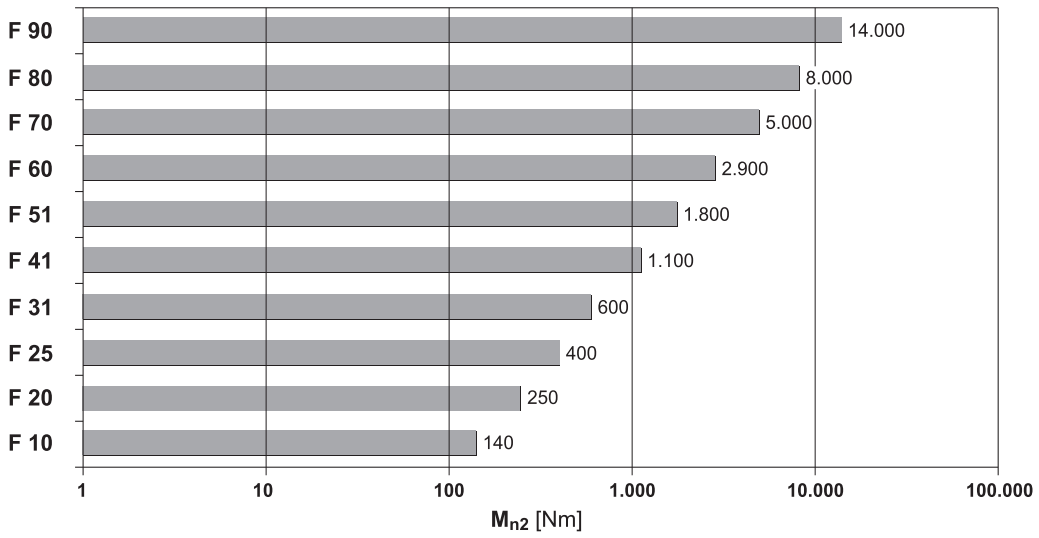

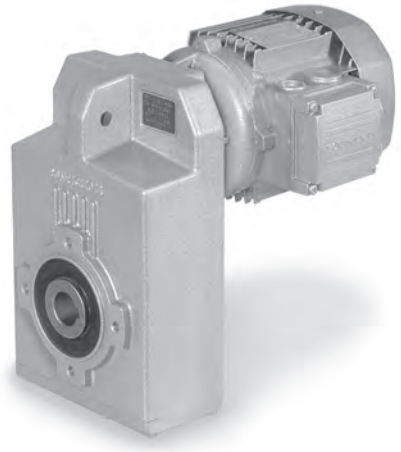

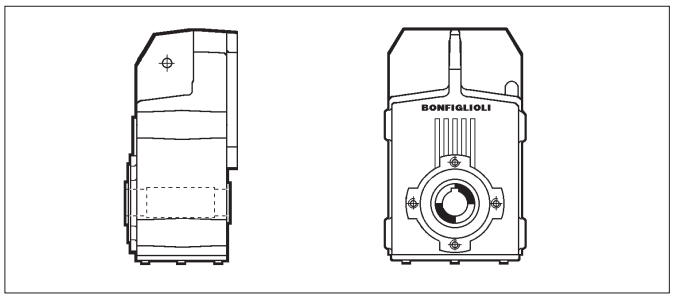

H

Federnut-Abtriebshohlwelle

F 10 ... F 90

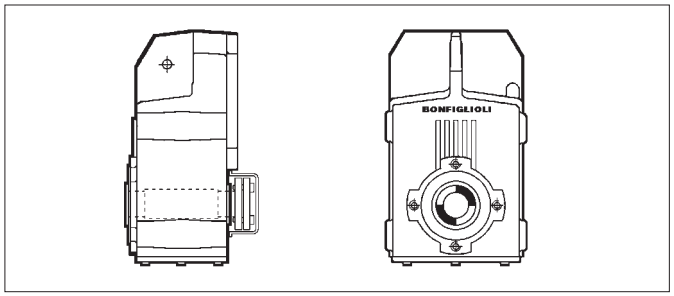

S

Abtriebshohlwelle und Schrumpfscheibe

F 10 ... F 90

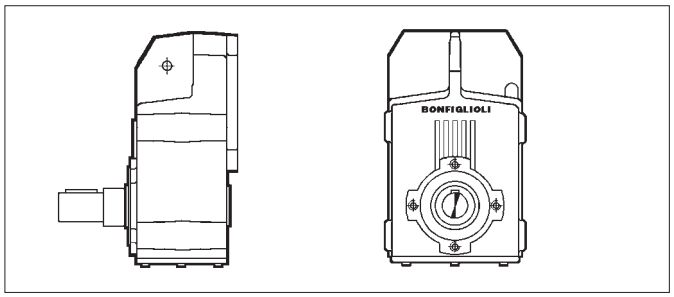

R

Abtriebsvollwelle

F 10 ... F 90

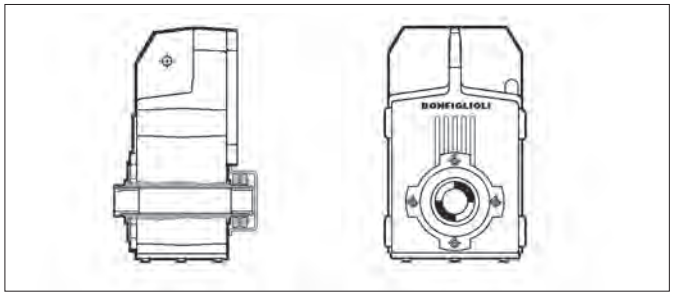

QF (Quick-fit)

Hohlwelle mit Adapterbuchsen und Schrumpfscheibe

F 10 ... F 60

	$M_{n2\ max}$ [Nm]
F 25 QF30	350
F 41 QF42	850
F 41 QF45	1000
F 51 QF50	1750

Bauformen mit aufgesetztem Flansc

Die angegebenen Bilder zeigen die den Grundbauformen anbaubaren Flansche.

H... F...

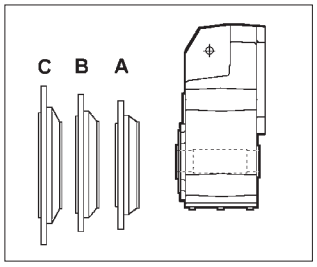

S F...

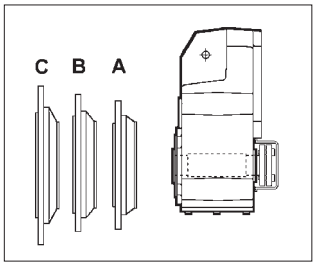

R F...

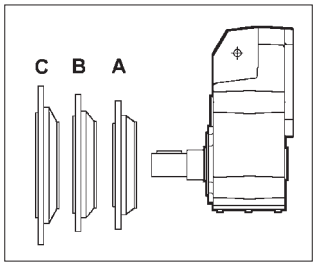

QF...

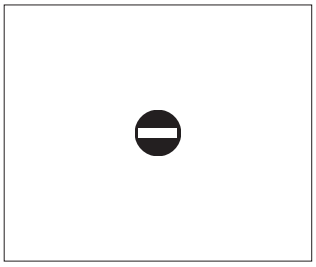

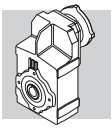

57 BEZEICHNUNG

GETRIEBE

F 10 2 H30 FA 9.8 S2 H5 .....

OPTIONEN

EINBAULAGEN
H1 (Default), **H2**, **H3**, **H4**, **H5**, **H6**

BEZEICHNUNG DER ANTRIEBSSEITE

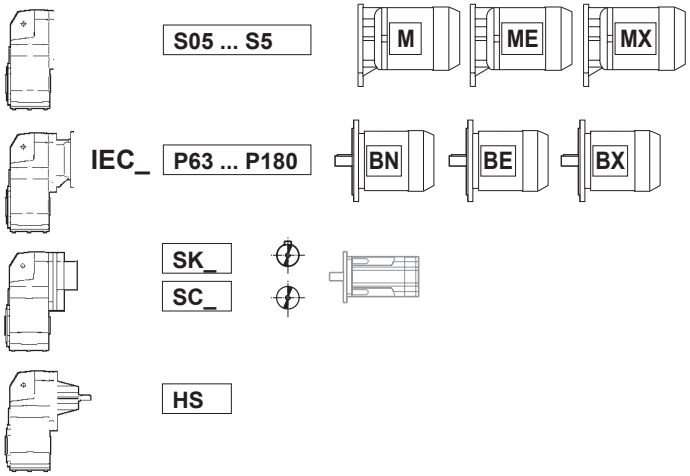

ÜBERSETZUNG

BAUGRÖSSE UND LAGE DER ANTRIEBSFLANSCH
(angeben nur wenn angefragt)
F = Ausführung mit Flansch
A, **B**, **C** = Flanschgröße

BAUFORM

	H									
	F 10	F 20	F 25	F 31	F 41	F 51	F 60	F 70	F 80	F 90
Standard	**H25**	**H30**	**H35**	**H35**	**H40**	**H50**	**H60**	**H80**	**H90**	**H100**
Alternative	H30	H35	H40	H40	H45	H55	H70	H70	H80	H90

S (F 10...F 90) **R** (F 10...F 90) **QF** (F 10...F 60)

← Alternative Durchmesser auf Anfrage

GETRIEBESTUFEN
2 (F 10...F 51), **3** (F 20...F 90), **4** (F 31...F 90)

GETRIEBEBAUGRÖSSE
10, **20**, **25**, **31**, **41**, **51**, **60**, **70**, **80**, **90**

TYP: **F** = Aufsteckgetriebe

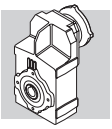

MOTOR | BREMSE

M 1LA 4 230/400-50 IP54 CLF ..... **W FD** 7.5 R SB 220 SA .....

OPTIONEN

BREMSVERSORGUNG

GLEICHRICHTERTYP
AC/DC
NB, **SB**, **NBR**, **SBR**

BREMSENTHANDLÜFTUNG
R, **RM**

BREMSMOMENT

BREMSENTYP
FD (G.S. Bremse)
FA (W.S. Bremse)

KLEMMENKASTENLAGE
W (default), **N**, **E**, **S**

BAUFORM
— (kompaktes Motor)
B5 (IEC Motor)

ISOLIERUNGSKLASSE
CL F standard
CL H option

SCHUTZART
IP55 standard (IP54 - Bremssmotor)

SPANNUNG - FREQUENZ

POLZAHL
2, **4**, **6**, **2/4**, **2/6**, **2/8**, **2/12**, **4/6**, **4/8**

MOTOR-BAUGRÖSSE
0B ... 5LA (kompaktes Motor)
63A ... 280M (IEC - motor)

MOTORTYP
MX = Dreiphasen Kompaktmotor, Klasse IE3
BX = Dreiphasen IEC Motor, Klasse IE3
ME = Dreiphasen Kompaktmotor, Klasse IE2
BE = Dreiphasen IEC Motor, Klasse IE2
M = Dreiphasen Kompaktmotor
BN = Dreiphasen IEC Motor

57.1 Getriebe Optionen

AL, AR

Auf Anfrage kann das Getriebe mit einer Rücklaufsperre ausgerüstet werden, um die Drehung der Abtriebswelle in nur einer Richtung zu ermöglichen. In der folgende Tabelle werden die Getriebe angegeben, die mit einer Rücklaufsperre geliefert werden können.

(D 44)

F 31 2*	**F 41 2** ⊖ (6.7; 10.8)					
F 31 3*	**F 41 3**	**F 51 3**	**F 60 3**	**F 70 3**	**F 80 3**	**F 90 3**
		F 51 4	**F 60 4**	**F 70 4**	**F 80 4**	**F 90 4**

* Mit dem Rücklaufsperre sind die Servoflanschen Typ S_60A, S_60B und S_80A unmöglich.

Bei Bestellung bitte die gewünschte freie Drehrichtung durch die Option AL oder AR (Tabelle D45) in der Getriebe- oder Motorbezeichnung angeben.

⚠ HINWEIS: Sollte ein Auslösen der Rücklaufsperre wiederholt erforderlich sein, muss kontrolliert werden, dass der Drehmoment am Abtrieb, der sich aus der Applikation der Last ergibt, 70% des Nenndrehmoments M_{n2} für dieses spezifische Getriebe nicht übersteigt.

(D 45)

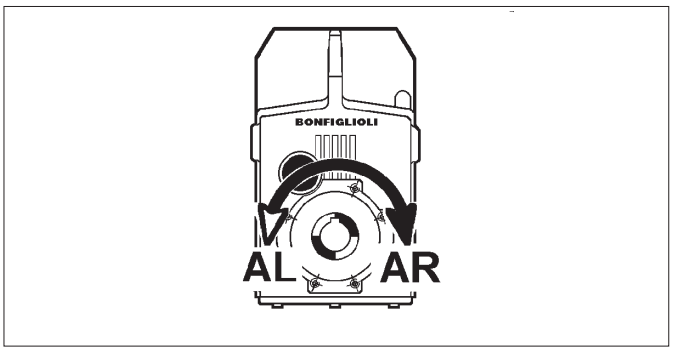

SO

Die Getriebetypen F 10, F 20, F 25, F 31 und F 41, die normalerweise inklusive Schmiermittel geliefert werden, werden ohne Schmierstoff geliefert.

LO

Die Getriebe F 51, F 60, F 70, F 80 und F 90, die gewöhnlich ohne Schmiermittel geliefert werden, werden in Übereinstimmung mit der Einbaulage mit dem standardmäßigen von BONFIGLIOLI RIDUTTORI verwendeten synthetischen Schmierstoff gefüllt.

DV

2 Wellendichtringe auf der eintreibenden Welle. (Nur für Kompaktgetriebemotoren).

VV

Wellendichtringe aus Fluor-Elastomer auf der eintreibenden Welle.

PV
Alle Wellendichtringe aus Fluor-Elastomer.

FL
Auf Anfrage kann das Getriebe bzw. der Getriebemotor F 10...F 41 mit seitlich bearbeiteten Flächen und mit Gewindebohrungen augestattet werden, die eine Befestigung ermöglichen. In der folgende Tabelle werden die Gewindesgrößen und Abstände angegeben (Für die Getrieben F 51...F 90 gehört diese Option zur Serienausstattung).

(D 46)

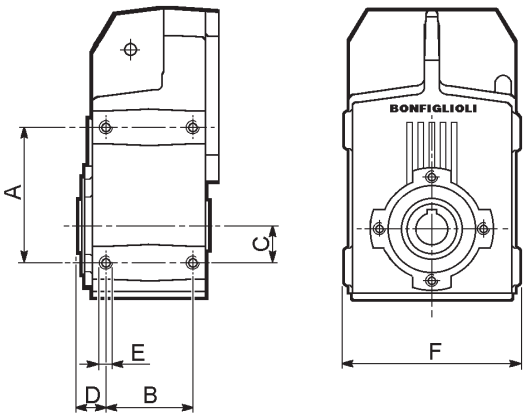

	A	B	C	D	E	F
F 10	115	60	35	21.25	M8x16	163
F 20	130	70	40	26.5	M10x20	181
F 25	130	70	40	27.5	M10x20	181
F 31	147	80	45	30	M12x20	203
F 41	190	95	60	32.5	M12x22	235

OBERFLÄCHENSCHUTZ

Wenn keine besondere Korrosionsschutzklasse gefordert ist, ist die lackierte Oberfläche des Getriebes mindestens mit einem Schutz gegen Korrosion der Klasse C2 nach UNI EN ISO 12944-2 geschützt
Für eine bessere Witterungsbeständigkeit können die Getriebe, durch eine Lackierung des ganzen Getriebes, mit einem Oberflächenschutz der Klassen **C3** und **C4** geliefert werden.

(D 47)

OBERFLÄ-CHENSCHUTZ	Typische Umgebungen	Maximale Ober-flächen-temperatu	Korrosionsschutzklasse nach UNI EN ISO 12944-2
C3	Stadt- und Industrieumgebung mit bis zu 100% relativer Luftfeuchtig-keit (mittlere Luftverschmutzung)	120°C	C3
C4	Industrie- und Küstengebiete und Chemieanlagen mit bis zu 100% relativer Luftfeuchtigkeit (hohe Luftverschmutzung)	120°C	C4

Getriebe mit einem optionalen Korrosionsschutz der Klassen **C3** oder **C4** sind in einer Auswahl von Farben verfügbar. Wenn keine spezielle Farbe gefordert ist, (siehe Option „Lackierung“) ist der Decklack in RAL 7042.
Unsere Getriebe können auch mit Oberflächenschutz der Klasse **C5** nach UNI EN ISO 12944-2 versehen werden. Für weitere technische Informationen wenden Sie bitte an unseren Technischen Service.

LACKIERUNG

Getriebe mit Oberflächenschutz der Klasse C3 oder C4, sind in den, in der folgenden Liste aufgelisteten Farben, verfügbar.

(D 48)

LACKIERUNG	Farbe	RAL Nummer
RAL7042*	Traffic Grey A	7042
RAL5010	Gentian Blue	5010
RAL9005	Jet Black	9005
RAL9006	White Aluminium	9006
RAL9010	Pure White	9010

* Die Getriebe werden in dieser Standardfarbe geliefert, wenn keine andere Farbe angegeben ist.

Hinweis – Die Option “Lackierung” kann nur im Zusammenhang mit dem Oberflächenschutz spezifiziert werden.

NACHWEISE

AC - Konformitätsbescheinigung Dokument mit dessen Ausstellung die Konformität des Produkts mit dem Auftrag, und dessen Konstruktion in Konformität mit den vom Qualitätsmanagementsystem von Bonfiglioli Riduttori vorgesehenen Standardfertigungs- und -kontrollverfahren bescheinigt wird.

CC – Prüfzeugnis
Die Bestellung führt zur Durchführung von Kontrollen der Konformität mit dem Auftrag, allgemeinen Sichtkontrollen und instrumentalen Prüfungen der Passmaße. Des Weiteren werden allgemeine Betriebskontrollen bei Leerlauf sowie Prüfungen der Funktionalität der Dichtungen bei Stillstand und während des Betriebs durchgeführt. Die Prüfung wird anhand einer Stichprobe des Versandloses durchgeführt.

57.2 Zubehör

siehe Abschnitt 68 des Kataloges.

57.3 Optionen Motoren

AA, AC, AD
Geben die Lage des Bremslüfterhebels zum Klemmenkasten an. Standard is 90° im Uhrzeigersinn beim Ansehen der Lüfterradseite. AA = 0°, AC = 180°, AD = 90° entgegen dem Uhrzeigersinn.

AL, AR
Für Getriebemotoren mit Kompaktmotor der Baureihe M oder ME steht die Option Rücklaufsperre zur Verfügung, welche direkt am Motor installiert ist und im Abschnitt über die Elektromotoren in diesem Katalog beschrieben wird. Die folgende Tabelle zeigt die freie Drehrichtung des Getriebemotors, anhand welcher die Option entsprechend gewählt werden muss.

(D 49)

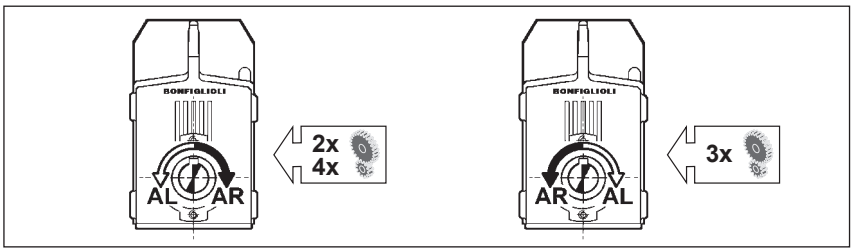

CF
Kapazitiver Filter.

D3
3 Bimetallfühler in den Wicklungen mit Temperatur von 150°C.

E3
3 Kaltleiterthermistoren in den Wicklungen mit Temperatur von 150°C.

F1
Schwungrad zum sanften Anfahren.

H1
Wicklungsheizung Standardspannung 1~ 230 V ±10%

PN
Die 60 Hz-Leistung entspricht der Normalleistung bei 50 Hz.

PS
Zweites Wellenende (schließt die Optionen RC, U1 und U2 aus).

RC
Schutzdach (schließt Option PS aus).

RV
Läufer in Vibrationsgrad B ausgewuchtet.

TC
Bei dieser Option handelt es sich um ein Schutzdachs mit einem Textilnetz, dessen Einsatz empfohlen wird wenn der Motor in Bereichen der Textilindustrie installiert wird. Diese Option schließt die Möglichkeit der Optionen EN_ .

TP
Tropenfestigkeit.

U1
Fremdbelüftung (Nicht anwendbar zusammen mit den Optionen PS und CUS).

U2
Fremdlüfter ohne Klemmenkasten, bereits intern verkabelt. Nicht anwendbar zusammen mit den Optionen PS und CUS. Verfügbar für folgende Motoren: BN 71, BE 80 ... BE 132, M1, ME2 ... ME4.

Weitere Informationen zu Optionen, finden Sie im Abschnitt “Elektromotoren”.

58 SCHMIERUNG

Die Schmierung der Getriebe von Bonfiglioli erfolgt durch eine Kombination aus Ölbad- und Spritzschmierung.
Die Getriebegrößen A 05, A 10, A 20, A 30, A 35 und A 41 sind ab Werk mit einer Lebensdauerschmierung versehen.
Die Getriebe ab der Größe A 50 werden ohne Ölfüllung ausgeliefert. Vor der Inbetriebnahme muss deshalb auf das Einfüllen der richtigen Ölfüllmenge geachtet werden !
In beiden Fällen, abhängig von der Ausführung, ist es notwendig vor der Inbetriebnahme des Getriebes den Verschlußstopfen durch den Entlüftungsstopfen, der mitgeliefert wird, zu ersetzen.
Hinweise zu der Position der Serviceschrauben/Stopfen und Angaben zu den Schmierstoffmengen finden Sie in der Betriebs- und Wartungsanleitung (auf www.bonfiglioli.com verfügbar).
Die mit Lebensdauerschmierung gelieferten Größen sind mit synthetischem Öl auf Polyglykolbasis gefüllt. Falls dieses Öl nicht verunreinigt wird, ist während der Lebensdauer des Getriebes kein Ölwechsel nötig.
Die Getriebe dürfen bei einer Umgebungstemperatur von -20°C bis +40°C betrieben werden.
Allerdings darf ein Start unter Last bei -20°C bis -10°C erst nach stufenweiser und gleichmäßiger Vorwärmung erfolgen. Anderfalls muss das Anfahren ohne Last erfolgen.
Die Last darf erst zugeschaltet werden, wenn die Getriebeeinheit eine Temperatur von mindestens -10° oder höher erreicht hat.

59 EINBAULAGEN UND LAGE DES KLEMMENKASTENS

Die Angaben zur Lage des Klemmenkastens beziehen sich auf das von der Lüfterseite her betrachtete Getriebe. Die Standardorientierung ist schwarz hervorgehoben (W).

Winkellage des Handlüfterhebels.
Bei Bremsmotoren wird der Handlüfterhebel (auf Anfrage) standardmäßig auf 90° gegenüber des Klemmkastens (AB- Anordnung) geliefert; wird eine andere Anordnung verlangt, muß dies bei der Bestellung durch die geeignete Option angegeben werden.

(D 50)

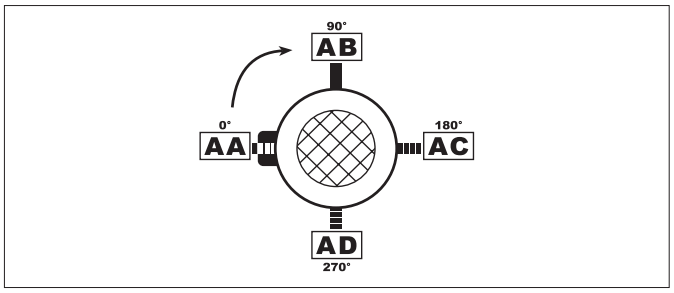

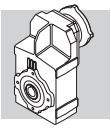

F ...

H1

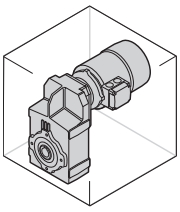

_S

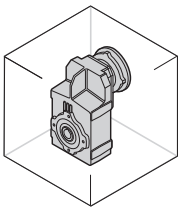

_P(IEC) _SK / _SC

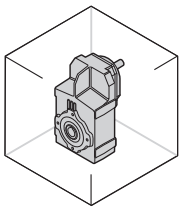

_HS

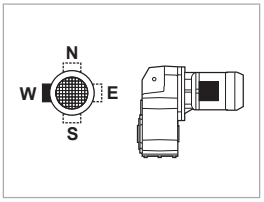

H2

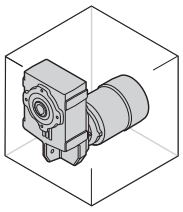

_S

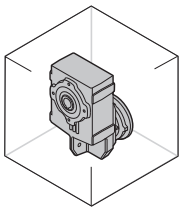

_P(IEC) _SK / _SC

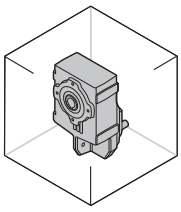

_HS

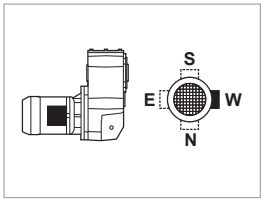

H3

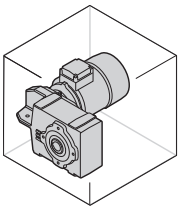

_S

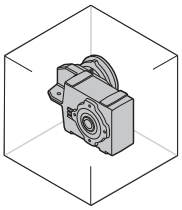

_P(IEC) _SK / _SC

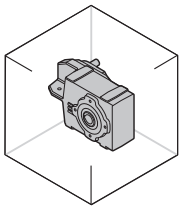

_HS

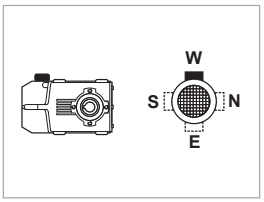

H4

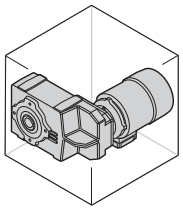

_S

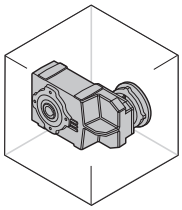

_P(IEC) _SK / _SC

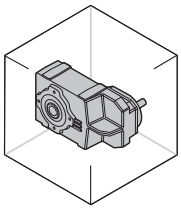

_HS

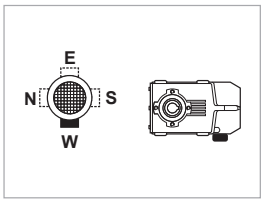

H5

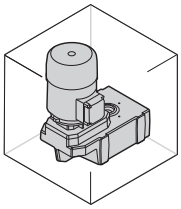

_S

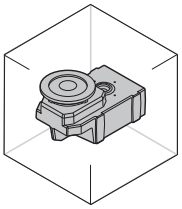

_P(IEC) _SK / _SC

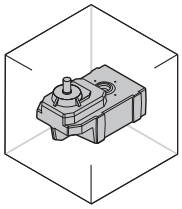

_HS

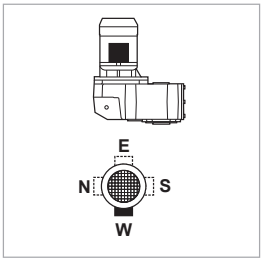

H6

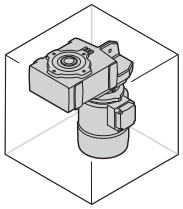

_S

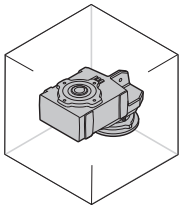

_P(IEC) _SK / _SC

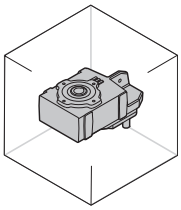

_HS

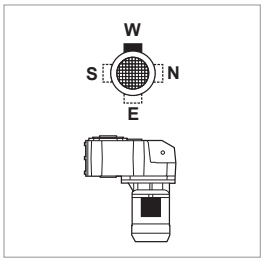

W = Default

60 RADIALKRÄFTE

Die mit den Antriebs- und/oder Abtriebswellen des Getriebes verbundenen Antriebsorgane bilden Kräfte, die in radiale Richtung auf die Welle selbst wirken.
Das Ausmaß dieser Kräfte muß mit der Festigkeit des Systems aus Getriebewelle/-lager kompatibel sein, insbesondere muß der absolute Wert der auftretenden Belastung (R_{c1} für Antriebswelle und R_{c2} für Abtriebswelle) unter dem in den Tabellen der Technischen Daten angegebenen Nennwert (R_{n1} für Antriebswelle und R_{n2} für Abtriebswelle) liegen.
In den nachstehenden Formeln bezieht sich die Angabe (1) auf die Maße der Antriebswelle, die Angabe (2) auf die Abtriebswelle.
Die von einem externen Antrieb erzeugte Kraft kann, recht genau, anhand der nachstehenden Formel berechnet werden

$$R_{c1}[N] = \frac{2000 \cdot M_1[Nm] \cdot K_r}{d\,[mm]} \quad ; \quad R_{c2}[N] = \frac{2000 \cdot M_2[Nm] \cdot K_r}{d\,[mm]} \qquad (35)$$

(D 51)

M_1 [Nm]	Drehmoment auf die Antriebswelle
M_2 [Nm]	Drehmoment auf die Abtriebswelle
d [mm]	Teilkreisdurchmesser von Bewegungselement, der auf der Abtriebswelle aufgeschrumpft ist
K_r = 1	Kettenantrieb

K_r = 1,25	Zahnradantrieb
K_r = 1,5	Antrieb über Keilriemen
K_r = 2,0	Antrieb über Flachriemen

In Abhängigkeit zum Kraftanangriffspunkt an der Welle muss die Überprüfung nach unterschiedlichen Verfahren durchgeführt werden.

(D 52)

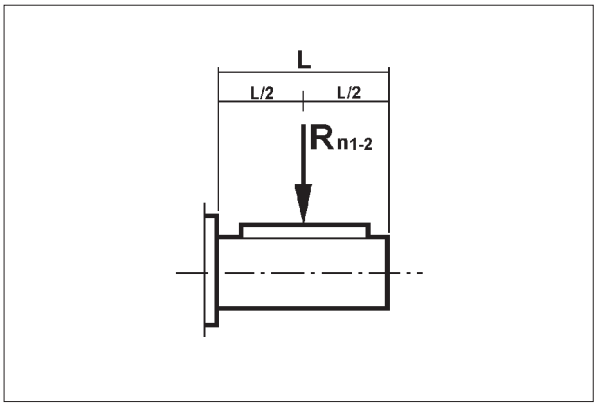

(D 53)

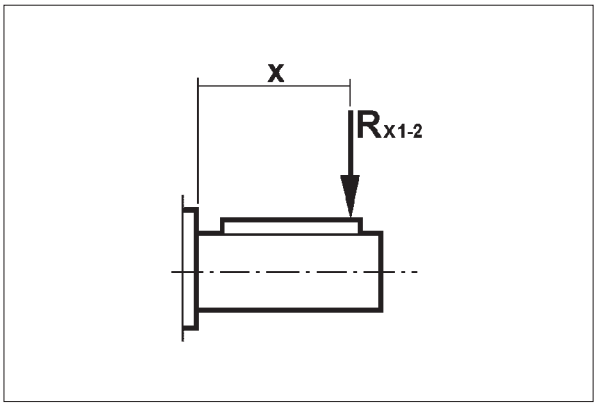

a) Kraftangriffspunkt in der Mitte, Tab. (D52)

Der zuvor errechnete Wert muß mit dem im Katalog angegebenen Nennwert verglichen werden. Es muß sich folgendes ergeben:

$R_{c1} \leq R_{n1}$ [Antriebswelle]

oder

$R_{c2} \leq R_{n2}$ [Abtriebswelle]

b) Von der Mitte versetzter Kraftangriffspunkt Tab. (D53)

Der auf einer Distanz “x” vom Wellenansatz liegende Kraftangriffspunkt fordert eine erneute Berechnung des für diesen Abstand zulässigen Werts.
Der neue Wert wird mit den Symbolen R_{x1} (Antrieb) und R_{x2} (Abtrieb) gekennzeichnet und unter Anwendung der nachstehenden Faktorenberechnung aus den Katalog- werten R_{n1} und R_{n2}:

$$\frac{a}{b+x} \qquad (36)$$

(D 54)

	Getriebekonstanten					
	Abtriebswelle			Antriebswelle		
	a	**b**	**c**	**a**	**b**	**c**
F 10 2	123	100.5	450	21	1	300
F 20 2	145	115	600	40	20	350
F 20 3	145	115	600	21	1	300
F 25 2 - F 25 3	157.5	127.5	800	40	20	350
F 25 4	157.5	127.5	800	21	1	300
F 31 2 - F 31 3	165	135	850	38.5	18.5	350
F 31 4	165	135	850	21	1	300
F 41 2 - F 41 3	191.5	151.5	1000	49.5	24.5	450
F 41 4	191.5	151.5	1000	40	20	350
F 51 2 - F 51 3	233.5	183.5	1300	49.5	24.5	450
F 51 4	233.5	183.5	1300	38.5	18.5	350
F 60 3	258.5	198.5	1100	55.5	25.5	600
F 60 4	258.5	198.5	1100	49.5	24.5	450
F 70 3	342	277	1600	86	31	1000
F 70 4	342	277	1600	49.5	24.5	450
F 80 3	386.5	301.5	1800	86	31	1000
F 80 4	386.5	301.5	1800	49.5	24.5	450
F 90 3	458.5	353.5	2400	116	46	1400
F 90 4	458.5	353.5	2400	49.5	24.5	450

Das Kontrollverfahren zieht die nachstehend beschriebenen Schritte nach sich.

ANTRIESBWELLE

1. Berechnung von:

$$R_{x1} = R_{n1} \cdot \frac{a}{b + x} \qquad (37)$$

HINWEIS unter der Bedingung, daß:

$$\frac{L}{2} \leq x \leq c \qquad (38)$$

Dies als Voraussetzung, muß sich folgendes ergeben:

$$R_{c1} \leq R_{x1} \qquad (39)$$

ABTRIEBSWELLE

1. Berechnung von:

$$R_{x2} = R_{n2} \cdot \frac{a}{b + x} \qquad (40)$$

HINWEIS unter der Bedingung, daß:

$$\frac{L}{2} \leq x \leq c \qquad (41)$$

Dies als Voraussetzung, muß sich folgendes ergeben:

$$R_{c2} \leq R_{x2} \qquad (42)$$

61 AXIALKRÄFTE, A_{n1}, A_{n2}

Die Werte der zulässigen, auf die Antriebswelle [A_{n1}] und auf die Abtriebswelle [A_{n2}] einwirkenden Axialkräfte können unter Bezugnahme auf den jeweiligen Wert der Radialkraft [R_{n1}] und [R_{n2}] anhand der nachstehenden Angaben berechnet werden:

$$A_{n1} = R_{n1} \cdot 0.2$$
$$A_{n2} = R_{n2} \cdot 0.2 \qquad (43)$$

Die so errechneten Werte der zulässigen Axialkräfte beziehen sich auf den Fall, in dem die Axialkräfte gleichzeitig mit den Nennradialkräften auftreten.
Nur im Fall, dass keine Radialbelastung auf die Getriebewelle wirkt, ist der Wert der zulässigen Axialbelastung [A_n] gleich 50% der zulässigen Radialbelastung [R_n] bezogen auf die gleiche Welle.
Bei sehr hohen Axialkräften oder stark erhöhten Radialkräften, wird im Hinblick auf eine genaue Kontrolle empfohlen, sich mit dem Technischen Kundendienst der Bonfiglioli Riduttori in Verbindung zu setzen.

Die Auswahl der Motoren ohne Bremse erfolgt nach den Vorgaben der Verordnung EG 640/2009 (siehe abschnitt **M** dieses Katalogs). Für Nennleistungen unter 0,75 kW können die BN/M-Motoren vorgesehen werden.
Die Verordnung EG 640/2009 gilt nicht für die Bremsmotoren, d.h., bei der Auswahl der Bremsmotoren sind die BN/M-Motoren in Betracht zu ziehen, ohne den Wert der Nennleistung zu berücksichtigen. Die BX, BE, MX und ME-Bremsmotoren sind auf Anfrage verfügbar.

0.09 kW

n_2 min-1	M_2 Nm	S	i	R_{n2} N	IE1		IEC IE1	
0.40	1945	2.6	2188	35000			**F704_2188 P63 BN63A6**	439
0.50	1526	3.4	1717	35000			**F704_1717 P63 BN63A6**	439
0.62	1254	0.9	1411	8500	**F414_1411 S05 M05A6**	426	**F414_1411 P63 BN63A6**	427
0.73	1079	1.0	1213	8500	**F414_1213 S05 M05A6**	426	**F414_1213 P63 BN63A6**	427
0.81	971	1.1	1092	8500	**F414_1092 S05 M05A6**	426	**F414_1092 P63 BN63A6**	427
0.90	874	1.3	982.4	8500	**F414_982.4 S05 M05A6**	426	**F414_982.4 P63 BN63A6**	427
0.98	801	1.4	900.5	8500	**F414_900.5 S05 M05A6**	426	**F414_900.5 P63 BN63A6**	427
1.1	724	1.5	813.8	8500	**F414_813.8 S05 M05A6**	426	**F414_813.8 P63 BN63A6**	427
1.2	678	0.9	762.3	6500	**F314_762.3 S05 M05A6**	422	**F314_762.3 P63 BN63A6**	423
1.2	658	1.7	739.4	8500	**F414_739.4 S05 M05A6**	426	**F414_739.4 P63 BN63A6**	427
1.3	610	1.0	685.6	6500	**F314_685.6 S05 M05A6**	422	**F314_685.6 P63 BN63A6**	423
1.3	614	1.8	690.1	8500	**F414_690.1 S05 M05A6**	426	**F414_690.1 P63 BN63A6**	427
1.4	551	1.1	619.9	6500	**F314_619.9 S05 M05A6**	422	**F314_619.9 P63 BN63A6**	423
1.5	515	1.2	578.6	6500	**F314_578.6 S05 M05A6**	422	**F314_578.6 P63 BN63A6**	423
1.6	489	2.2	549.8	8500	**F414_549.8 S05 M05A6**	426	**F414_549.8 P63 BN63A6**	427
1.7	469	0.9	527.3	6500	**F254_527.3 S05 M05A6**	418	**F254_527.3 P63 BN63A6**	419
1.7	469	1.3	527.8	6500	**F314_527.8 S05 M05A6**	422	**F314_527.8 P63 BN63A6**	423
1.9	414	1.0	466.0	6500	**F254_466.0 S05 M05A6**	418	**F254_466.0 P63 BN63A6**	419
1.9	411	1.5	462.6	6500	**F314_462.6 S05 M05A6**	422	**F314_462.6 P63 BN63A6**	423
2.0	387	1.0	434.9	6500	**F254_434.9 S05 M05A6**	418	**F254_434.9 P63 BN63A6**	419
2.0	386	2.9	433.7	8500	**F414_433.7 S05 M05A6**	426	**F414_433.7 P63 BN63A6**	427
2.1	372	1.6	418.9	6500	**F314_418.9 S05 M05A6**	422	**F314_418.9 P63 BN63A6**	423
2.2	350	1.1	393.9	6500	**F254_393.9 S05 M05A6**	418	**F254_393.9 P63 BN63A6**	419
2.4	340	1.8	374.4	6500			**F313_374.4 P63 BN63A6**	423
2.6	302	2.0	332.8	6500			**F313_332.8 P63 BN63A6**	423
2.6	313	3.5	344.8	8500			**F413_344.8 P63 BN63A6**	427
2.8	288	0.9	316.9	4000	**F203_316.9 S05 M05A6**	414	**F203_316.9 P63 BN63A6**	415
3.0	267	2.2	293.8	6500			**F313_293.8 P63 BN63A6**	423
3.1	259	1.0	285.2	4000	**F203_285.2 S05 M05A6**	414	**F203_285.2 P63 BN63A6**	415
3.4	232	1.1	255.3	4000	**F203_255.3 S05 M05A6**	414	**F203_255.3 P63 BN63A6**	415
3.5	230	2.6	253.6	6500			**F313_253.6 P63 BN63A6**	423
3.9	207	2.9	228.2	6500			**F313_228.2 P63 BN63A6**	423
4.2	190	1.3	209.3	4000	**F203_209.3 S05 M05A6**	414	**F203_209.3 P63 BN63A6**	415
4.4	184	3.3	202.3	6500			**F313_202.3 P63 BN63A6**	423
4.8	168	1.5	184.9	4000	**F203_184.9 S05 M05A6**	414	**F203_184.9 P63 BN63A6**	415
5.1	157	1.6	172.6	4000	**F203_172.6 S05 M05A6**	414	**F203_172.6 P63 BN63A6**	415
5.6	142	1.8	156.3	4000	**F203_156.3 S05 M05A6**	414	**F203_156.3 P63 BN63A6**	415
6.7	123	2.0	132.2	4000	**F202_132.2 S05 M05A6**	414	**F202_132.2 P63 BN63A6**	415
6.9	118	1.2	127.1	2800	**F102_127.1 S05 M05A6**	410	**F102_127.1 P63 BN63A6**	411

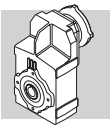

0.09 kW

n_2 min-1	M_2 Nm	S	i	R_{n2} N	IE1		IEC IE1	
7.7	106	2.4	114.3	4000	**F202_114.3 S05 M05A6**	414	**F202_114.3 P63 BN63A6**	415
8.3	98	1.4	106.0	2800	**F102_106.0 S05 M05A6**	410	**F102_106.0 P63 BN63A6**	411
8.7	94	2.6	101.6	4000	**F202_101.6 S05 M05A6**	414	**F202_101.6 P63 BN63A6**	415
9.6	85	1.6	91.5	2800	**F102_91.5 S05 M05A6**	410	**F102_91.5 P63 BN63A6**	411
9.7	84	3.0	90.4	4000	**F202_90.4 S05 M05A6**	414	**F202_90.4 P63 BN63A6**	415
10.8	75	1.9	81.3	2800	**F102_81.3 S05 M05A6**	410	**F102_81.3 P63 BN63A6**	411
11.5	71	3.5	76.8	4000	**F202_76.8 S05 M05A6**	414	**F202_76.8 P63 BN63A6**	415
12.4	66	2.1	71.1	2800	**F102_71.1 S05 M05A6**	410	**F102_71.1 P63 BN63A6**	411
14.0	58	2.4	63.0	2800	**F102_63.0 S05 M05A6**	410	**F102_63.0 P63 BN63A6**	411
15.5	53	2.7	56.7	2800	**F102_56.7 S05 M05A6**	410	**F102_56.7 P63 BN63A6**	411
18.1	45	3.1	48.7	2800	**F102_48.7 S05 M05A6**	410	**F102_48.7 P63 BN63A6**	411
19.7	41	3.4	44.7	2800	**F102_44.7 S05 M05A6**	410	**F102_44.7 P63 BN63A6**	411
22.2	37	3.8	39.6	2800	**F102_39.6 S05 M05A6**	410	**F102_39.6 P63 BN63A6**	411
24.9	33	4.3	35.3	2800	**F102_35.3 S05 M05A6**	410	**F102_35.3 P63 BN63A6**	411
26.7	31	4.6	33.0	2800	**F102_33.0 S05 M05A6**	410	**F102_33.0 P63 BN63A6**	411
29.7	28	5.1	29.6	2800	**F102_29.6 S05 M05A6**	410	**F102_29.6 P63 BN63A6**	411
34	24	5.9	25.8	2800	**F102_25.8 S05 M05A6**	410	**F102_25.8 P63 BN63A6**	411
39	21	6.6	22.8	2800	**F102_22.8 S05 M05A6**	410	**F102_22.8 P63 BN63A6**	411
46	18	7.8	19.3	2800	**F102_19.3 S05 M05A6**	410	**F102_19.3 P63 BN63A6**	411
52	16	8.9	17.0	2800	**F102_17.0 S05 M05A6**	410	**F102_17.0 P63 BN63A6**	411
60	14	10.1	14.6	2700	**F102_14.6 S05 M05A6**	410	**F102_14.6 P63 BN63A6**	411
68	12	10.3	13.0	2600	**F102_13.0 S05 M05A6**	410	**F102_13.0 P63 BN63A6**	411
76	11	10.3	11.5	2500	**F102_11.5 S05 M05A6**	410	**F102_11.5 P63 BN63A6**	411
90	9	11.8	9.8	2370	**F102_9.8 S05 M05A6**	410	**F102_9.8 P63 BN63A6**	411
103	8	11.8	8.6	2270	**F102_8.6 S05 M05A6**	410	**F102_8.6 P63 BN63A6**	411
119	7	13.2	7.4	2160	**F102_7.4 S05 M05A6**	410	**F102_7.4 P63 BN63A6**	411

0.12 kW

n_2 min-1	M_2 Nm	S	i	R_{n2} N	IE1		IEC IE1	
0.40	2623	1.9	2188	35000			**F704_2188 P63 BN63B6**	439
0.51	2058	2.5	1717	35000			**F704_1717 P63 BN63B6**	439
0.60	1742	2.9	2188	35000			**F704_2188 P63 BN63A4**	439
0.65	1607	3.1	2019	35000			**F704_2019 P63 BN63A4**	439
0.76	1368	2.1	1141	20000			**F604_1141 P63 BN63B6**	435
0.89	1178	0.9	982.4	8500	**F414_982.4 S05 M05B6**	426	**F414_982.4 P63 BN63B6**	427
0.96	1090	1.0	1411	8500	**F414_1411 S05 M05A4**	426	**F414_1411 P63 BN63A4**	427
1.1	938	1.2	1213	8500	**F414_1213 S05 M05A4**	426	**F414_1213 P63 BN63A4**	427
1.2	844	1.3	1092	8500	**F414_1092 S05 M05A4**	426	**F414_1092 P63 BN63A4**	427
1.4	759	1.4	982.4	8500	**F414_982.4 S05 M05A4**	426	**F414_982.4 P63 BN63A4**	427
1.5	696	1.6	900.5	8500	**F414_900.5 S05 M05A4**	426	**F414_900.5 P63 BN63A4**	427
1.6	643	0.9	831.6	6500	**F314_831.6 S05 M05A4**	422	**F314_831.6 P63 BN63A4**	423
1.7	629	1.7	813.8	8500	**F414_813.8 S05 M05A4**	426	**F414_813.8 P63 BN63A4**	427
1.8	589	1.0	762.3	6500	**F314_762.3 S05 M05A4**	422	**F314_762.3 P63 BN63A4**	423
1.8	571	1.9	739.4	8500	**F414_739.4 S05 M05A4**	426	**F414_739.4 P63 BN63A4**	427
2.0	530	1.1	685.6	6500	**F314_685.6 S05 M05A4**	422	**F314_685.6 P63 BN63A4**	423
2.0	533	2.1	690.1	8500	**F414_690.1 S05 M05A4**	426	**F414_690.1 P63 BN63A4**	427
2.2	479	1.3	619.9	6500	**F314_619.9 S05 M05A4**	422	**F314_619.9 P63 BN63A4**	423
2.3	456	0.9	589.7	6500	**F254_589.7 S05 M05A4**	418	**F254_589.7 P63 BN63A4**	419
2.3	447	1.3	578.6	6500	**F314_578.6 S05 M05A4**	422	**F314_578.6 P63 BN63A4**	423
2.5	425	2.6	549.8	8500	**F414_549.8 S05 M05A4**	426	**F414_549.8 P63 BN63A4**	427
2.6	408	1.0	527.3	6500	**F254_527.3 S05 M05A4**	418	**F254_527.3 P63 BN63A4**	419

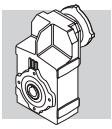

0.12 kW

n_2 min-1	M_2 Nm	S	i	R_{n2} N	IE1		IEC IE1	
2.6	408	1.5	527.8	6500	**F314_527.8 S05 M05A4**	422	**F314_527.8 P63 BN63A4**	423
2.9	360	1.1	466.0	6500	**F254_466.0 S05 M05A4**	418	**F254_466.0 P63 BN63A4**	419
2.9	358	1.7	462.6	6500	**F314_462.6 S05 M05A4**	422	**F314_462.6 P63 BN63A4**	423
3.1	336	1.2	434.9	6500	**F254_434.9 S05 M05A4**	418	**F254_434.9 P63 BN63A4**	419
3.1	335	3.3	433.7	8500	**F414_433.7 S05 M05A4**	426	**F414_433.7 P63 BN63A4**	427
3.2	324	1.9	418.9	6500	**F314_418.9 S05 M05A4**	422	**F314_418.9 P63 BN63A4**	423
3.4	304	1.3	393.9	6500	**F254_393.9 S05 M05A4**	418	**F254_393.9 P63 BN63A4**	419
3.6	296	2.0	374.4	6500			**F313_374.4 P63 BN63A4**	423
4.1	263	1.5	333.1	6500	**F253_333.1 S05 M05A4**	418	**F253_333.1 P63 BN63A4**	419
4.1	263	2.3	332.8	6500			**F313_332.8 P63 BN63A4**	423
4.3	250	1.0	316.9	4000	**F203_316.9 S05 M05A4**	414	**F203_316.9 P63 BN63A4**	415
4.6	232	2.6	293.8	6500			**F313_293.8 P63 BN63A4**	423
4.7	225	1.1	285.2	4000	**F203_285.2 S05 M05A4**	414	**F203_285.2 P63 BN63A4**	415
4.7	228	1.8	288.1	6500	**F253_288.1 S05 M05A4**	418	**F253_288.1 P63 BN63A4**	419
5.3	202	1.2	255.3	4000	**F203_255.3 S05 M05A4**	414	**F203_255.3 P63 BN63A4**	415
5.3	202	2.0	256.1	6500	**F253_256.1 S05 M05A4**	418	**F253_256.1 P63 BN63A4**	419
5.3	200	3.0	253.6	6500			**F313_253.6 P63 BN63A4**	423
5.9	180	2.2	227.8	6500	**F253_227.8 S05 M05A4**	418	**F253_227.8 P63 BN63A4**	419
5.9	180	3.3	228.2	6500			**F313_228.2 P63 BN63A4**	423
6.5	165	1.5	209.3	4000	**F203_209.3 S05 M05A4**	414	**F203_209.3 P63 BN63A4**	415
7.0	153	2.6	193.6	6500	**F253_193.6 S05 M05A4**	418	**F253_193.6 P63 BN63A4**	419
7.3	146	1.7	184.9	4000	**F203_184.9 S05 M05A4**	414	**F203_184.9 P63 BN63A4**	415
7.7	138	2.9	174.2	6500	**F253_174.2 S05 M05A4**	418	**F253_174.2 P63 BN63A4**	419
7.8	136	1.8	172.6	4000	**F203_172.6 S05 M05A4**	414	**F203_172.6 P63 BN63A4**	415
8.6	123	2.0	156.3	4000	**F203_156.3 S05 M05A4**	414	**F203_156.3 P63 BN63A4**	415
8.7	123	3.2	155.9	6500	**F253_155.9 S05 M05A4**	418	**F253_155.9 P63 BN63A4**	419
9.4	113	3.5	143.0	6500	**F253_143.0 S05 M05A4**	418	**F253_143.0 P63 BN63A4**	419
10.2	107	2.3	132.2	4000	**F202_132.2 S05 M05A4**	414	**F202_132.2 P63 BN63A4**	415
10.6	103	1.4	127.1	2800	**F102_127.1 S05 M05A4**	410	**F102_127.1 P63 BN63A4**	411
11.8	92	2.7	114.3	4000	**F202_114.3 S05 M05A4**	414	**F202_114.3 P63 BN63A4**	415
12.7	86	1.6	106.0	2800	**F102_106.0 S05 M05A4**	410	**F102_106.0 P63 BN63A4**	411
13.3	82	3.0	101.6	4000	**F202_101.6 S05 M05A4**	414	**F202_101.6 P63 BN63A4**	415
14.8	74	1.9	91.5	2800	**F102_91.5 S05 M05A4**	410	**F102_91.5 P63 BN63A4**	411
14.9	73	3.4	90.4	4000	**F202_90.4 S05 M05A4**	414	**F202_90.4 P63 BN63A4**	415
16.6	66	2.1	81.3	2800	**F102_81.3 S05 M05A4**	410	**F102_81.3 P63 BN63A4**	411
19.0	57	2.4	71.1	2800	**F102_71.1 S05 M05A4**	410	**F102_71.1 P63 BN63A4**	411
21.4	51	2.8	63.0	2800	**F102_63.0 S05 M05A4**	410	**F102_63.0 P63 BN63A4**	411
23.8	46	3.1	56.7	2800	**F102_56.7 S05 M05A4**	410	**F102_56.7 P63 BN63A4**	411
27.7	39	3.6	48.7	2800	**F102_48.7 S05 M05A4**	410	**F102_48.7 P63 BN63A4**	411
30	36	3.9	44.7	2800	**F102_44.7 S05 M05A4**	410	**F102_44.7 P63 BN63A4**	411
34	32	4.4	39.6	2800	**F102_39.6 S05 M05A4**	410	**F102_39.6 P63 BN63A4**	411
38	29	4.9	35.3	2800	**F102_35.3 S05 M05A4**	410	**F102_35.3 P63 BN63A4**	411
41	27	5.3	33.0	2800	**F102_33.0 S05 M05A4**	410	**F102_33.0 P63 BN63A4**	411
46	24	5.9	29.6	2800	**F102_29.6 S05 M05A4**	410	**F102_29.6 P63 BN63A4**	411
52	21	6.7	25.8	2800	**F102_25.8 S05 M05A4**	410	**F102_25.8 P63 BN63A4**	411
59	18	7.6	22.8	2700	**F102_22.8 S05 M05A4**	410	**F102_22.8 P63 BN63A4**	411
70	16	8.7	19.3	2560	**F102_19.3 S05 M05A4**	410	**F102_19.3 P63 BN63A4**	411
80	14	9.3	17.0	2450	**F102_17.0 S05 M05A4**	410	**F102_17.0 P63 BN63A4**	411
92	12	10.1	14.6	2340	**F102_14.6 S05 M05A4**	410	**F102_14.6 P63 BN63A4**	411
104	11	9.9	13.0	2250	**F102_13.0 S05 M05A4**	410	**F102_13.0 P63 BN63A4**	411
117	9	10.3	11.5	2160	**F102_11.5 S05 M05A4**	410	**F102_11.5 P63 BN63A4**	411
138	8	11.3	9.8	2050	**F102_9.8 S05 M05A4**	410	**F102_9.8 P63 BN63A4**	411
157	7	11.8	8.6	1970	**F102_8.6 S05 M05A4**	410	**F102_8.6 P63 BN63A4**	411
182	6	12.7	7.4	1870	**F102_7.4 S05 M05A4**	410	**F102_7.4 P63 BN63A4**	411

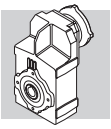

0.18 kW

n_2 min-1	M_2 Nm	S	i	R_{n2} N	IE1		IEC IE1	
0.41	3804	1.3	2188	35000	**F704_2188 S1 M1SC6**	438	**F704_2188 P71 BN71A6**	439
0.45	3511	1.4	2019	35000	**F704_2019 S1 M1SC6**	438	**F704_2019 P71 BN71A6**	439
0.45	3455	2.3	1987	45000	**F804_1987 S1 M1SC6**	441	**F804_1987 P71 BN71A6**	442
0.49	3189	2.5	1834	45000	**F804_1834 S1 M1SC6**	441	**F804_1834 P71 BN71A6**	442
0.52	2985	1.7	1717	35000	**F704_1717 S1 M1SC6**	438	**F704_1717 P71 BN71A6**	439
0.53	2972	2.7	1709	45000	**F804_1709 S1 M1SC6**	441	**F804_1709 P71 BN71A6**	442
0.57	2756	1.8	1585	35000	**F704_1585 S1 M1SC6**	438	**F704_1585 P71 BN71A6**	439
0.57	2744	2.9	1578	45000	**F804_1578 S1 M1SC6**	441	**F804_1578 P71 BN71A6**	442
0.61	2576	1.9	1481	35000	**F704_1481 S1 M1SC6**	438	**F704_1481 P71 BN71A6**	439
0.65	2406	3.3	1384	45000	**F804_1384 S1 M1SC6**	441	**F804_1384 P71 BN71A6**	442
0.66	2378	2.1	1368	35000	**F704_1368 S1 M1SC6**	438	**F704_1368 P71 BN71A6**	439
0.76	2055	2.4	1182	35000	**F704_1182 S1 M1SC6**	438	**F704_1182 P71 BN71A6**	439
0.77	2030	0.9	1168	12000	**F514_1168 S1 M1SC6**	430	**F514_1168 P71 BN71A6**	431
0.79	1985	1.5	1141	20000	**F604_1141 S1 M1SC6**	434	**F604_1141 P71 BN71A6**	435
0.83	1897	2.6	1091	35000	**F704_1091 S1 M1SC6**	438	**F704_1091 P71 BN71A6**	439
0.84	1861	1.0	1070	12000	**F514_1070 S1 M1SC6**	430	**F514_1070 P71 BN71A6**	431
0.85	1832	1.6	1054	20000	**F604_1054 S1 M1SC6**	434	**F604_1054 P71 BN71A6**	435
0.92	1703	1.1	979.4	12000	**F514_979.4 S1 M1SC6**	430	**F514_979.4 P71 BN71A6**	431
0.92	1694	3.0	974.4	35000	**F704_974.4 S1 M1SC6**	438	**F704_974.4 P71 BN71A6**	439
0.94	1667	1.7	958.9	20000	**F604_958.9 S1 M1SC6**	434	**F604_958.9 P71 BN71A6**	435
1.0	1540	1.2	885.5	12000	**F514_885.5 S1 M1SC6**	430	**F514_885.5 P71 BN71A6**	431
1.0	1539	1.9	885.1	20000	**F604_885.1 S1 M1SC6**	434	**F604_885.1 P71 BN71A6**	435
1.0	1564	3.2	899.4	35000	**F704_899.4 S1 M1SC6**	438	**F704_899.4 P71 BN71A6**	439
1.1	1437	1.3	826.4	12000	**F514_826.4 S1 M1SC6**	430	**F514_826.4 P71 BN71A6**	431
1.1	1430	3.5	822.2	35000	**F704_822.2 S1 M1SC6**	438	**F704_822.2 P71 BN71A6**	439
1.2	1286	0.9	739.4	8500	**F414_739.4 S1 M1SC6**	426	**F414_739.4 P71 BN71A6**	427
1.2	1286	0.9	739.4	8500	**F414_739.4 S1 M1SC6**	426	**F414_739.4 P71 BN71A6**	427
1.3	1200	0.9	690.1	8500	**F414_690.1 S1 M1SC6**	426	**F414_690.1 P71 BN71A6**	427
1.3	1200	0.9	690.1	8500	**F414_690.1 S1 M1SC6**	426	**F414_690.1 P71 BN71A6**	427
1.3	1165	0.9	982.4	8500	**F414_982.4 S05 M05B4**	426	**F414_982.4 P63 BN63B4**	427
1.5	1068	1.0	900.5	8500	**F414_900.5 S05 M05B4**	426	**F414_900.5 P63 BN63B4**	427
1.6	965	1.1	813.8	8500	**F414_813.8 S05 M05B4**	426	**F414_813.8 P63 BN63B4**	427
1.8	877	1.3	739.4	8500	**F414_739.4 S05 M05B4**	426	**F414_739.4 P63 BN63B4**	427
1.9	818	1.3	690.1	8500	**F414_690.1 S05 M05B4**	426	**F414_690.1 P63 BN63B4**	427
2.3	686	0.9	578.6	6500	**F314_578.6 S05 M05B4**	422	**F314_578.6 P63 BN63B4**	423
2.4	652	1.7	549.8	8500	**F414_549.8 S05 M05B4**	426	**F414_549.8 P63 BN63B4**	427
2.5	626	1.0	527.8	6500	**F314_527.8 S05 M05B4**	422	**F314_527.8 P63 BN63B4**	423
2.9	549	1.1	462.6	6500	**F314_462.6 S05 M05B4**	422	**F314_462.6 P63 BN63B4**	423
3.0	514	2.1	433.7	8500	**F414_433.7 S05 M05B4**	426	**F414_433.7 P63 BN63B4**	427
3.2	497	1.2	418.9	6500	**F314_418.9 S05 M05B4**	422	**F314_418.9 P63 BN63B4**	423
3.4	467	0.9	393.9	6500	**F254_393.9 S05 M05B4**	418	**F254_393.9 P63 BN63B4**	419
3.5	454	1.3	374.4	6500			**F313_374.4 P63 BN63B4**	423
3.8	418	2.6	344.8	8500			**F413_344.8 P63 BN63B4**	427
4.0	404	1.0	333.1	6500	**F253_333.1 S05 M05B4**	418	**F253_333.1 P63 BN63B4**	419
4.0	403	1.5	332.8	6500			**F313_332.8 P63 BN63B4**	423
4.5	356	1.7	293.8	6500			**F313_293.8 P63 BN63B4**	423
4.5	359	3.1	296.6	8500			**F413_296.6 P63 BN63B4**	427
4.6	349	1.1	288.1	6500	**F253_288.1 S05 M05B4**	418	**F253_288.1 P63 BN63B4**	419
4.9	323	3.4	266.9	8500			**F413_266.9 P63 BN63B4**	427
5.2	310	1.3	256.1	6500	**F253_256.1 S05 M05B4**	418	**F253_256.1 P63 BN63B4**	419
5.2	307	2.0	253.6	6500			**F313_253.6 P63 BN63B4**	423
5.8	276	1.4	227.8	6500	**F253_227.8 S05 M05B4**	418	**F253_227.8 P63 BN63B4**	419
5.8	277	2.2	228.2	6500			**F313_228.2 P63 BN63B4**	423
6.3	254	1.0	209.3	4000	**F203_209.3 S05 M05B4**	414	**F203_209.3 P63 BN63B4**	415
6.5	245	2.4	202.3	6500			**F313_202.3 P63 BN63B4**	423
6.8	235	1.7	193.6	6500	**F253_193.6 S05 M05B4**	418	**F253_193.6 P63 BN63B4**	419
7.1	224	1.1	184.9	4000	**F203_184.9 S05 M05B4**	414	**F203_184.9 P63 BN63B4**	415
7.1	225	2.7	185.4	6500			**F313_185.4 P63 BN63B4**	423
7.6	209	1.2	172.6	4000	**F203_172.6 S05 M05B4**	414	**F203_172.6 P63 BN63B4**	415
7.6	211	1.9	174.2	6500	**F253_174.2 S05 M05B4**	418	**F253_174.2 P63 BN63B4**	419
7.9	202	3.0	166.8	6500			**F313_166.8 P63 BN63B4**	423
8.4	189	1.3	156.3	4000	**F203_156.3 S05 M05B4**	414	**F203_156.3 P63 BN63B4**	415
8.5	189	2.1	155.9	6500	**F253_155.9 S05 M05B4**	418	**F253_155.9 P63 BN63B4**	419
8.8	183	3.3	150.8	6500			**F313_150.8 P63 BN63B4**	423
9.2	173	2.3	143.0	6500	**F253_143.0 S05 M05B4**	418	**F253_143.0 P63 BN63B4**	419

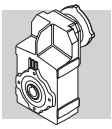

0.18 kW

n_2 min-1	M_2 Nm	S	i	R_{n2} N	IE1		IEC IE1	
9.4	171	3.5	140.7	6500			**F313_140.7 P63 BN63B4**	423
10.0	164	1.5	132.2	4000	**F202_132.2 S05 M05B4**	414	**F202_132.2 P63 BN63B4**	415
10.3	155	2.6	127.8	6500	**F253_127.8 S05 M05B4**	418	**F253_127.8 P63 BN63B4**	419
10.4	157	0.9	127.1	2800	**F102_127.1 S05 M05B4**	410	**F102_127.1 P63 BN63B4**	411
11.5	142	1.8	114.3	4000	**F202_114.3 S05 M05B4**	414	**F202_114.3 P63 BN63B4**	415
11.7	137	2.9	113.0	6500	**F253_113.0 S05 M05B4**	418	**F253_113.0 P63 BN63B4**	419
12.5	131	1.1	106.0	2800	**F102_106.0 S05 M05B4**	410	**F102_106.0 P63 BN63B4**	411
12.5	128	3.1	105.4	6500	**F253_105.4 S05 M05B4**	418	**F253_105.4 P63 BN63B4**	419
13.0	126	2.0	101.6	4000	**F202_101.6 S05 M05B4**	414	**F202_101.6 P63 BN63B4**	415
13.8	116	3.5	95.5	6500	**F253_95.5 S05 M05B4**	418	**F253_95.5 P63 BN63B4**	419
14.4	113	1.2	91.5	2800	**F102_91.5 S05 M05B4**	410	**F102_91.5 P63 BN63B4**	411
14.6	112	2.2	90.4	4000	**F202_90.4 S05 M05B4**	414	**F202_90.4 P63 BN63B4**	415
16.2	101	1.4	81.3	2800	**F102_81.3 S05 M05B4**	410	**F102_81.3 P63 BN63B4**	411
17.2	95	2.6	76.8	4000	**F202_76.8 S05 M05B4**	414	**F202_76.8 P63 BN63B4**	415
18.6	88	1.6	71.1	2800	**F102_71.1 S05 M05B4**	410	**F102_71.1 P63 BN63B4**	411
19.1	86	2.9	69.1	4000	**F202_69.1 S05 M05B4**	414	**F202_69.1 P63 BN63B4**	415
21.0	78	1.8	63.0	2800	**F102_63.0 S05 M05B4**	410	**F102_63.0 P63 BN63B4**	411
21.3	77	3.3	61.9	4000	**F202_61.9 S05 M05B4**	414	**F202_61.9 P63 BN63B4**	415
23.3	70	2.0	56.7	2800	**F102_56.7 S05 M05B4**	410	**F102_56.7 P63 BN63B4**	411
27.1	60	2.3	48.7	2800	**F102_48.7 S05 M05B4**	410	**F102_48.7 P63 BN63B4**	411
29.6	55	2.5	44.7	2800	**F102_44.7 S05 M05B4**	410	**F102_44.7 P63 BN63B4**	411
33	49	2.9	39.6	2800	**F102_39.6 S05 M05B4**	410	**F102_39.6 P63 BN63B4**	411
37	44	3.2	35.3	2800	**F102_35.3 S05 M05B4**	410	**F102_35.3 P63 BN63B4**	411
40	41	3.4	33.0	2800	**F102_33.0 S05 M05B4**	410	**F102_33.0 P63 BN63B4**	411
45	37	3.8	29.6	2800	**F102_29.6 S05 M05B4**	410	**F102_29.6 P63 BN63B4**	411
51	32	4.4	25.8	2780	**F102_25.8 S05 M05B4**	410	**F102_25.8 P63 BN63B4**	411
58	28	5.0	22.8	2680	**F102_22.8 S05 M05B4**	410	**F102_22.8 P63 BN63B4**	411
68	24	5.7	19.3	2540	**F102_19.3 S05 M05B4**	410	**F102_19.3 P63 BN63B4**	411
78	21	6.1	17.0	2440	**F102_17.0 S05 M05B4**	410	**F102_17.0 P63 BN63B4**	411
90	18	6.6	14.6	2330	**F102_14.6 S05 M05B4**	410	**F102_14.6 P63 BN63B4**	411
101	16	6.4	13.0	2240	**F102_13.0 S05 M05B4**	410	**F102_13.0 P63 BN63B4**	411
114	14	6.7	11.5	2150	**F102_11.5 S05 M05B4**	410	**F102_11.5 P63 BN63B4**	411
135	12	7.4	9.8	2040	**F102_9.8 S05 M05B4**	410	**F102_9.8 P63 BN63B4**	411
154	11	7.7	8.6	1960	**F102_8.6 S05 M05B4**	410	**F102_8.6 P63 BN63B4**	411
178	9	8.3	7.4	1870	**F102_7.4 S05 M05B4**	410	**F102_7.4 P63 BN63B4**	411
186	9	10.7	14.6	1860	**F102_14.6 S05 M05A2**	410	**F102_14.6 P63 BN63A2**	411
210	8	10.9	13.0	1790	**F102_13.0 S05 M05A2**	410	**F102_13.0 P63 BN63A2**	411
237	7	11.3	11.5	1720	**F102_11.5 S05 M05A2**	410	**F102_11.5 P63 BN63A2**	411
279	6	12.5	9.8	1630	**F102_9.8 S05 M05A2**	410	**F102_9.8 P63 BN63A2**	411
318	5	13.0	8.6	1560	**F102_8.6 S05 M05A2**	410	**F102_8.6 P63 BN63A2**	411
369	4	14.2	7.4	1490	**F102_7.4 S05 M05A2**	410	**F102_7.4 P63 BN63A2**	411

0.25 kW

n_2 min-1	M_2 Nm	S	i	R_{n2} N	IE1		IEC IE1	
0.41	5283	0.9	2188	35000	**F704_2188 S1 M1SD6**	438	**F704_2188 P71 BN71B6**	439
0.45	4877	1.0	2019	35000	**F704_2019 S1 M1SD6**	438	**F704_2019 P71 BN71B6**	439
0.45	4799	1.7	1987	45000	**F804_1987 S1 M1SD6**	441	**F804_1987 P71 BN71B6**	442
0.49	4430	1.8	1834	45000	**F804_1834 S1 M1SD6**	441	**F804_1834 P71 BN71B6**	442
0.52	4146	1.2	1717	35000	**F704_1717 S1 M1SD6**	438	**F704_1717 P71 BN71B6**	439
0.53	4128	1.9	1709	45000	**F804_1709 S1 M1SD6**	441	**F804_1709 P71 BN71B6**	442
0.57	3827	1.3	1585	35000	**F704_1585 S1 M1SD6**	438	**F704_1585 P71 BN71B6**	439
0.57	3810	2.1	1578	45000	**F804_1578 S1 M1SD6**	441	**F804_1578 P71 BN71B6**	442
0.61	3578	1.4	1481	35000	**F704_1481 S1 M1SD6**	438	**F704_1481 P71 BN71B6**	439
0.65	3342	2.4	1384	45000	**F804_1384 S1 M1SD6**	441	**F804_1384 P71 BN71B6**	442
0.66	3303	1.5	1368	35000	**F704_1368 S1 M1SD6**	438	**F704_1368 P71 BN71B6**	439
0.70	3085	2.6	1277	45000	**F804_1277 S1 M1SD6**	441	**F804_1277 P71 BN71B6**	442
0.76	2854	1.8	1182	35000	**F704_1182 S1 M1SD6**	438	**F704_1182 P71 BN71B6**	439

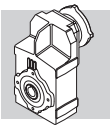

0.25 kW

n_2 min-1	M_2 Nm	S	i	R_{n2} N	IE1		IEC IE1	
0.79	2757	1.1	1141	20000	**F604_1141 S1 M1SD6**	434	**F604_1141 P71 BN71B6**	435
0.79	2769	2.9	1146	45000	**F804_1146 S1 M1SD6**	441	**F804_1146 P71 BN71B6**	442
0.83	2635	1.9	1091	35000	**F704_1091 S1 M1SD6**	438	**F704_1091 P71 BN71B6**	439
0.85	2545	1.1	1054	20000	**F604_1054 S1 M1SD6**	434	**F604_1054 P71 BN71B6**	435
0.85	2556	3.1	1058	45000	**F804_1058 S1 M1SD6**	441	**F804_1058 P71 BN71B6**	442
0.92	2353	2.1	974.4	35000	**F704_974.4 S1 M1SD6**	438	**F704_974.4 P71 BN71B6**	439
0.94	2316	1.3	958.9	20000	**F604_958.9 S1 M1SD6**	434	**F604_958.9 P71 BN71B6**	435
1.0	2138	1.4	885.1	20000	**F604_885.1 S1 M1SD6**	434	**F604_885.1 P71 BN71B6**	435
1.0	2172	2.3	899.4	35000	**F704_899.4 S1 M1SD6**	438	**F704_899.4 P71 BN71B6**	439
1.1	1996	0.9	826.4	12000	**F514_826.4 S1 M1SD6**	430	**F514_826.4 P71 BN71B6**	431
1.1	1986	2.5	822.2	35000	**F704_822.2 S1 M1SD6**	438	**F704_822.2 P71 BN71B6**	439
1.3	1633	1.1	676.3	12000	**F514_676.3 S1 M1SD6**	430	**F514_676.3 P71 BN71B6**	431
1.4	1600	1.8	662.4	20000	**F604_662.4 S1 M1SD6**	434	**F604_662.4 P71 BN71B6**	435
1.4	1588	3.1	657.4	35000	**F704_657.4 S1 M1SD6**	438	**F704_657.4 P71 BN71B6**	439
1.5	1477	2.0	611.4	20000	**F604_611.4 S1 M1SD6**	434	**F604_611.4 P71 BN71B6**	435
1.5	1466	3.4	606.8	35000	**F704_606.8 S1 M1SD6**	438	**F704_606.8 P71 BN71B6**	439
1.7	1282	0.9	813.8	8500	**F414_813.8 S05 M05C4**	426	**F414_813.8 P71 BN71A4**	427
1.8	1199	0.9	739.4	8500	**F414_739.4 S05 M05C4**	426	**F414_739.4 P71 BN71A4**	427
1.9	1119	1.0	690.1	8500	**F414_690.1 S05 M05C4**	426	**F414_690.1 P71 BN71A4**	427
2.4	892	1.2	549.8	8500	**F414_549.8 S05 M05C4**	426	**F414_549.8 P71 BN71A4**	427
2.8	783	2.3	317.3	12000	**F513_317.3 S1 M1SD6**	430	**F513_317.3 P71 BN71B6**	431
3.1	704	1.6	433.7	8500	**F414_433.7 S05 M05C4**	426	**F414_433.7 P71 BN71A4**	427
3.2	679	0.9	418.9	6500	**F314_418.9 S05 M05C4**	422	**F314_418.9 P71 BN71A4**	423
3.7	603	1.0	374.4	6500			**F313_374.4 P71 BN71A4**	423
4.0	555	2.0	344.8	8500			**F413_344.8 P71 BN71A4**	427
4.1	536	1.1	332.8	6500			**F313_332.8 P71 BN71A4**	423
4.7	473	1.3	293.8	6500			**F313_293.8 P71 BN71A4**	423
4.7	477	2.3	296.6	8500			**F413_296.6 P71 BN71A4**	427
5.2	425	0.9	256.1	6500	**F253_256.1 S05 M05C4**	418	**F253_256.1 P71 BN71A4**	419
5.2	430	2.6	266.9	8500			**F413_266.9 P71 BN71A4**	427
5.4	408	1.5	253.6	6500			**F313_253.6 P71 BN71A4**	423
5.7	387	2.8	240.1	8500			**F413_240.1 P71 BN71A4**	427
5.9	378	1.1	227.8	6500	**F253_227.8 S05 M05C4**	418	**F253_227.8 P71 BN71A4**	419
6.0	367	1.6	228.2	6500			**F313_228.2 P71 BN71A4**	423
6.3	354	3.1	220.1	8500			**F413_220.1 P71 BN71A4**	427
6.8	326	1.8	202.3	6500			**F313_202.3 P71 BN71A4**	423
6.9	321	1.2	193.6	6500	**F253_193.6 S05 M05C4**	418	**F253_193.6 P71 BN71A4**	419
6.9	320	3.4	198.9	8500			**F413_198.9 P71 BN71A4**	427
7.4	299	2.0	185.4	6500			**F313_185.4 P71 BN71A4**	423
7.7	289	1.4	174.2	6500	**F253_174.2 S05 M05C4**	418	**F253_174.2 P71 BN71A4**	419
8.0	278	0.9	172.6	4000	**F203_172.6 S05 M05C4**	414	**F203_172.6 P71 BN71A4**	415
8.3	268	2.2	166.8	6500			**F313_166.8 P71 BN71A4**	423
8.6	259	1.0	156.3	4000	**F203_156.3 S05 M05C4**	414	**F203_156.3 P71 BN71A4**	415
8.6	259	1.5	155.9	6500	**F253_155.9 S05 M05C4**	418	**F253_155.9 P71 BN71A4**	419
9.2	243	2.5	150.8	6500			**F313_150.8 P71 BN71A4**	423
9.7	230	1.7	143.0	6500	**F253_143.0 S05 M05C4**	418	**F253_143.0 P71 BN71A4**	419
9.8	227	2.6	140.7	6500			**F313_140.7 P71 BN71A4**	423
10.1	224	1.1	132.2	4000	**F202_132.2 S05 M05C4**	414	**F202_132.2 P71 BN71A4**	415
10.5	212	1.9	127.8	6500	**F253_127.8 S05 M05C4**	418	**F253_127.8 P71 BN71A4**	419
10.7	207	2.9	128.4	6500			**F313_128.4 P71 BN71A4**	423
11.7	194	1.3	114.3	4000	**F202_114.3 S05 M05C4**	414	**F202_114.3 P71 BN71A4**	415
12.2	182	2.2	113.0	6500	**F253_113.0 S05 M05C4**	418	**F253_113.0 P71 BN71A4**	419
12.3	181	3.3	112.5	6500			**F313_112.5 P71 BN71A4**	423
12.7	175	2.3	105.4	6500	**F253_105.4 S05 M05C4**	418	**F253_105.4 P71 BN71A4**	419
13.2	172	1.5	101.6	4000	**F202_101.6 S05 M05C4**	414	**F202_101.6 P71 BN71A4**	415
14.0	158	2.5	95.5	6500	**F253_95.5 S05 M05C4**	418	**F253_95.5 P71 BN71A4**	419
14.6	155	0.9	91.5	2800	**F102_91.5 S05 M05C4**	410	**F102_91.5 P71 BN71A4**	411

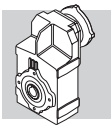

0.25 kW

n_2 min-1	M_2 Nm	S	i	R_{n2} N	IE1		IEC IE1	
14.8	153	1.6	90.4	4000	**F202_90.4 S05 M05C4**	414	**F202_90.4 P71 BN71A4**	415
16.1	138	2.9	83.4	6500	**F253_83.4 S05 M05C4**	418	**F253_83.4 P71 BN71A4**	419
16.5	138	1.0	81.3	2800	**F102_81.3 S05 M05C4**	410	**F102_81.3 P71 BN71A4**	411
17.4	130	1.9	76.8	4000	**F202_76.8 S05 M05C4**	414	**F202_76.8 P71 BN71A4**	415
17.5	127	3.2	76.6	6420	**F253_76.6 S05 M05C4**	418	**F253_76.6 P71 BN71A4**	419
18.8	120	1.2	71.1	2800	**F102_71.1 S05 M05C4**	410	**F102_71.1 P71 BN71A4**	411
19.4	117	2.1	69.1	4000	**F202_69.1 S05 M05C4**	414	**F202_69.1 P71 BN71A4**	415
21.3	107	1.3	63.0	2800	**F102_63.0 S05 M05C4**	410	**F102_63.0 P71 BN71A4**	411
21.7	105	2.4	61.9	4000	**F202_61.9 S05 M05C4**	414	**F202_61.9 P71 BN71A4**	415
23.6	96	1.5	56.7	2800	**F102_56.7 S05 M05C4**	410	**F102_56.7 P71 BN71A4**	411
23.6	96	2.6	56.7	4000	**F202_56.7 S05 M05C4**	414	**F202_56.7 P71 BN71A4**	415
26.4	86	2.9	50.7	4000	**F202_50.7 S05 M05C4**	414	**F202_50.7 P71 BN71A4**	415
27.5	83	1.7	48.7	2800	**F102_48.7 S05 M05C4**	410	**F102_48.7 P71 BN71A4**	411
29.9	76	3.3	44.8	3870	**F202_44.8 S05 M05C4**	414	**F202_44.8 P71 BN71A4**	415
30	76	1.9	44.7	2800	**F102_44.7 S05 M05C4**	410	**F102_44.7 P71 BN71A4**	411
34	67	2.1	39.6	2800	**F102_39.6 S05 M05C4**	410	**F102_39.6 P71 BN71A4**	411
38	60	2.3	35.3	2800	**F102_35.3 S05 M05C4**	410	**F102_35.3 P71 BN71A4**	411
41	56	2.5	33.0	2800	**F102_33.0 S05 M05C4**	410	**F102_33.0 P71 BN71A4**	411
45	50	2.8	29.6	2800	**F102_29.6 S05 M05C4**	410	**F102_29.6 P71 BN71A4**	411
52	44	3.2	25.8	2750	**F102_25.8 S05 M05C4**	410	**F102_25.8 P71 BN71A4**	411
59	39	3.6	22.8	2650	**F102_22.8 S05 M05C4**	410	**F102_22.8 P71 BN71A4**	411
69	33	4.2	19.3	2520	**F102_19.3 S05 M05C4**	410	**F102_19.3 P71 BN71A4**	411
81	28	4.6	17.0	2420	**F102_17.0 S05 M05C4**	410	**F102_17.0 P71 BN71A4**	411
91	25	4.8	14.6	2310	**F102_14.6 S05 M05C4**	410	**F102_14.6 P71 BN71A4**	411
103	22	4.7	13.0	2230	**F102_13.0 S05 M05C4**	410	**F102_13.0 P71 BN71A4**	411
120	19	5.1	11.5	2140	**F102_11.5 S05 M05C4**	410	**F102_11.5 P71 BN71A4**	411
137	17	5.4	9.8	2030	**F102_9.8 S05 M05C4**	410	**F102_9.8 P71 BN71A4**	411
161	14	5.8	8.6	1950	**F102_8.6 S05 M05C4**	410	**F102_8.6 P71 BN71A4**	411
181	13	6.1	7.4	1860	**F102_7.4 S05 M05C4**	410	**F102_7.4 P71 BN71A4**	411
187	12	7.7	14.6	1850	**F102_14.6 S05 M05B2**	410	**F102_14.6 P63 BN63B2**	411
210	11	7.9	13.0	1780	**F102_13.0 S05 M05B2**	410	**F102_13.0 P63 BN63B2**	411
237	10	8.2	11.5	1710	**F102_11.5 S05 M05B2**	410	**F102_11.5 P63 BN63B2**	411
280	8	9.0	9.8	1620	**F102_9.8 S05 M05B2**	410	**F102_9.8 P63 BN63B2**	411
319	7	9.4	8.6	1550	**F102_8.6 S05 M05B2**	410	**F102_8.6 P63 BN63B2**	411
370	6	10.3	7.4	1480	**F102_7.4 S05 M05B2**	410	**F102_7.4 P63 BN63B2**	411

0.37 kW

n_2 min-1	M_2 Nm	S	i	R_{n2} N	IE1		IEC IE1	
0.46	7024	1.1	1987	45000	**F804_1987 S1 M1LA6**	441	**F804_1987 P80 BN80A6**	442
0.50	6484	1.2	1834	45000	**F804_1834 S1 M1LA6**	441	**F804_1834 P80 BN80A6**	442
0.53	6042	1.3	1709	45000	**F804_1709 S1 M1LA6**	441	**F804_1709 P80 BN80A6**	442
0.57	5602	0.9	1585	35000	**F704_1585 S1 M1LA6**	438	**F704_1585 P80 BN80A6**	439
0.58	5577	1.4	1578	45000	**F804_1578 S1 M1LA6**	441	**F804_1578 P80 BN80A6**	442
0.61	5238	1.0	1481	35000	**F704_1481 S1 M1LA6**	438	**F704_1481 P80 BN80A6**	439
0.63	5137	1.0	2188	35000	**F704_2188 S1 M1SD4**	438	**F704_2188 P71 BN71B4**	439
0.68	4742	1.1	2019	35000	**F704_2019 S1 M1SD4**	438	**F704_2019 P71 BN71B4**	439
0.69	4666	1.7	1987	45000	**F804_1987 S1 M1SD4**	441	**F804_1987 P71 BN71B4**	442
0.75	4307	1.9	1834	45000	**F804_1834 S1 M1SD4**	441	**F804_1834 P71 BN71B4**	442
0.80	4031	1.2	1717	35000	**F704_1717 S1 M1SD4**	438	**F704_1717 P71 BN71B4**	439
0.80	4013	2.0	1709	45000	**F804_1709 S1 M1SD4**	441	**F804_1709 P71 BN71B4**	442
0.86	3721	1.3	1585	35000	**F704_1585 S1 M1SD4**	438	**F704_1585 P71 BN71B4**	439
0.87	3705	2.2	1578	45000	**F804_1578 S1 M1SD4**	441	**F804_1578 P71 BN71B4**	442
0.92	3479	1.4	1481	35000	**F704_1481 S1 M1SD4**	438	**F704_1481 P71 BN71B4**	439
0.99	3250	2.5	1384	45000	**F804_1384 S1 M1SD4**	441	**F804_1384 P71 BN71B4**	442

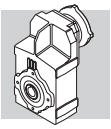

0.37 kW

n_2 min-1	M_2 Nm	S	i	R_{n2} N	IE1		IEC IE1	
1.0	3211	1.6	1368	35000	**F704_1368 S1 M1SD4**	438	**F704_1368 P71 BN71B4**	439
1.1	3000	2.7	1277	45000	**F804_1277 S1 M1SD4**	441	**F804_1277 P71 BN71B4**	442
1.2	2680	1.1	1141	20000	**F604_1141 S1 M1SD4**	434	**F604_1141 P71 BN71B4**	435
1.2	2775	1.8	1182	35000	**F704_1182 S1 M1SD4**	438	**F704_1182 P71 BN71B4**	439
1.2	2692	3.0	1146	45000	**F804_1146 S1 M1SD4**	441	**F804_1146 P71 BN71B4**	442
1.3	2474	1.2	1054	20000	**F604_1054 S1 M1SD4**	434	**F604_1054 P71 BN71B4**	435
1.3	2562	2.0	1091	35000	**F704_1091 S1 M1SD4**	438	**F704_1091 P71 BN71B4**	439
1.3	2485	3.2	1058	45000	**F804_1058 S1 M1SD4**	441	**F804_1058 P71 BN71B4**	442
1.4	2252	1.3	958.9	20000	**F604_958.9 S1 M1SD4**	434	**F604_958.9 P71 BN71B4**	435
1.4	2288	2.2	974.4	35000	**F704_974.4 S1 M1SD4**	438	**F704_974.4 P71 BN71B4**	439
1.5	2079	0.9	885.5	12000	**F514_885.5 S1 M1SD4**	430	**F514_885.5 P71 BN71B4**	431
1.5	2078	1.4	885.1	20000	**F604_885.1 S1 M1SD4**	434	**F604_885.1 P71 BN71B4**	435
1.5	2112	2.4	899.4	35000	**F704_899.4 S1 M1SD4**	438	**F704_899.4 P71 BN71B4**	439
1.7	1941	0.9	826.4	12000	**F514_826.4 S1 M1SD4**	430	**F514_826.4 P71 BN71B4**	431
1.7	1931	2.6	822.2	35000	**F704_822.2 S1 M1SD4**	438	**F704_822.2 P71 BN71B4**	439
2.0	1588	1.1	676.3	12000	**F514_676.3 S1 M1SD4**	430	**F514_676.3 P71 BN71B4**	431
2.1	1556	1.9	662.4	20000	**F604_662.4 S1 M1SD4**	434	**F604_662.4 P71 BN71B4**	435
2.1	1544	3.2	657.4	35000	**F704_657.4 S1 M1SD4**	438	**F704_657.4 P71 BN71B4**	439
2.2	1436	2.0	611.4	20000	**F604_611.4 S1 M1SD4**	434	**F604_611.4 P71 BN71B4**	435
2.3	1425	3.5	606.8	35000	**F704_606.8 S1 M1SD4**	438	**F704_606.8 P71 BN71B4**	439
2.5	1291	0.9	549.8	8500	**F414_549.8 S1 M1SD4**	426	**F414_549.8 P71 BN71B4**	427
2.6	1246	1.4	530.5	12000	**F514_530.5 S1 M1SD4**	430	**F514_530.5 P71 BN71B4**	431
2.6	1246	2.3	530.7	20000	**F604_530.7 S1 M1SD4**	434	**F604_530.7 P71 BN71B4**	435
2.8	1150	2.5	489.8	20000	**F604_489.8 S1 M1SD4**	434	**F604_489.8 P71 BN71B4**	435
3.2	1018	1.1	433.7	8500	**F414_433.7 S1 M1SD4**	426	**F414_433.7 P71 BN71B4**	427
3.2	1008	1.8	429.1	12000	**F514_429.1 S1 M1SD4**	430	**F514_429.1 P71 BN71B4**	431
3.2	1016	2.9	432.6	20000	**F604_432.6 S1 M1SD4**	434	**F604_432.6 P71 BN71B4**	435
3.4	938	3.1	399.3	20000	**F604_399.3 S1 M1SD4**	434	**F604_399.3 P71 BN71B4**	435
3.9	846	2.1	352.5	12000	**F513_352.5 S1 M1SD4**	430	**F513_352.5 P71 BN71B4**	431
4.0	827	1.3	344.8	8500	**F413_344.8 S1 M1SD4**	426	**F413_344.8 P71 BN71B4**	427
4.3	761	2.4	317.3	12000	**F513_317.3 S1 M1SD4**	430	**F513_317.3 P71 BN71B4**	431
4.6	712	1.5	296.6	8500	**F413_296.6 S1 M1SD4**	426	**F413_296.6 P71 BN71B4**	427
4.8	686	2.6	285.9	12000	**F513_285.9 S1 M1SD4**	430	**F513_285.9 P71 BN71B4**	431
5.1	641	1.7	266.9	8500	**F413_266.9 S1 M1SD4**	426	**F413_266.9 P71 BN71B4**	427
5.2	629	2.9	262.1	12000	**F513_262.1 S1 M1SD4**	430	**F513_262.1 P71 BN71B4**	431
5.4	609	1.0	253.6	6500	**F313_253.6 S1 M1SD4**	422	**F313_253.6 P71 BN71B4**	423
5.7	576	1.9	240.1	8500	**F413_240.1 S1 M1SD4**	426	**F413_240.1 P71 BN71B4**	427
5.7	576	3.1	239.8	12000	**F513_239.8 S1 M1SD4**	430	**F513_239.8 P71 BN71B4**	431
6.0	548	1.1	228.2	6500	**F313_228.2 S1 M1SD4**	422	**F313_228.2 P71 BN71B4**	423
6.2	528	2.1	220.1	8500	**F413_220.1 S1 M1SD4**	426	**F413_220.1 P71 BN71B4**	427
6.3	520	3.5	216.9	12000	**F513_216.9 S1 M1SD4**	430	**F513_216.9 P71 BN71B4**	431
6.8	485	1.2	202.3	6500	**F313_202.3 S1 M1SD4**	422	**F313_202.3 P71 BN71B4**	423
6.9	477	2.3	198.9	8500	**F413_198.9 S1 M1SD4**	426	**F413_198.9 P71 BN71B4**	427
7.4	445	1.3	185.4	6500	**F313_185.4 S1 M1SD4**	422	**F313_185.4 P71 BN71B4**	423
7.6	434	2.5	180.7	8500	**F413_180.7 S1 M1SD4**	426	**F413_180.7 P71 BN71B4**	427
7.9	418	1.0	174.2	6500	**F253_174.2 S1 M1SD4**	418	**F253_174.2 P71 BN71B4**	419
8.1	405	2.7	168.7	8500	**F413_168.7 S1 M1SD4**	426	**F413_168.7 P71 BN71B4**	427
8.2	400	1.5	166.8	6500	**F313_166.8 S1 M1SD4**	422	**F313_166.8 P71 BN71B4**	423
8.8	374	1.1	155.9	6500	**F253_155.9 S1 M1SD4**	418	**F253_155.9 P71 BN71B4**	419
9.1	362	1.7	150.8	6500	**F313_150.8 S1 M1SD4**	422	**F313_150.8 P71 BN71B4**	423
9.6	343	1.2	143.0	6500	**F253_143.0 S1 M1SD4**	418	**F253_143.0 P71 BN71B4**	419
9.7	338	1.8	140.7	6500	**F313_140.7 S1 M1SD4**	422	**F313_140.7 P71 BN71B4**	423
10.2	323	3.4	134.4	8500	**F413_134.4 S1 M1SD4**	426	**F413_134.4 P71 BN71B4**	427
10.7	307	1.3	127.8	6500	**F253_127.8 S1 M1SD4**	418	**F253_127.8 P71 BN71B4**	419
10.7	308	1.9	128.4	6500	**F313_128.4 S1 M1SD4**	422	**F313_128.4 P71 BN71B4**	423
12.1	271	1.5	113.0	6500	**F253_113.0 S1 M1SD4**	418	**F253_113.0 P71 BN71B4**	419
12.2	270	2.2	112.5	6500	**F313_112.5 S1 M1SD4**	422	**F313_112.5 P71 BN71B4**	423
13.0	253	1.6	105.4	6500	**F253_105.4 S1 M1SD4**	418	**F253_105.4 P71 BN71B4**	419
13.4	245	2.5	101.9	6500	**F313_101.9 S1 M1SD4**	422	**F313_101.9 P71 BN71B4**	423
13.5	249	1.0	101.6	4000			**F202_101.6 P71 BN71B4**	415
14.3	229	1.7	95.5	6490	**F253_95.5 S1 M1SD4**	418	**F253_95.5 P71 BN71B4**	419
15.2	222	1.1	90.4	4000	**F202_90.4 S1 M1SD4**	414	**F202_90.4 P71 BN71B4**	415
15.7	210	2.9	87.4	6500	**F313_87.4 S1 M1SD4**	422	**F313_87.4 P71 BN71B4**	423
16.4	200	2.0	83.4	6280	**F253_83.4 S1 M1SD4**	418	**F253_83.4 P71 BN71B4**	419
17.4	189	3.2	78.9	6500	**F313_78.9 S1 M1SD4**	422	**F313_78.9 P71 BN71B4**	423

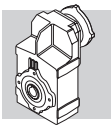

0.37 kW

n_2 min-1	M_2 Nm	S	i	R_{n2} N	IE1		IEC IE1	
17.8	188	1.3	76.8	4000	**F202_76.8 S1 M1SD4**	414	**F202_76.8 P71 BN71B4**	415
17.9	184	2.2	76.6	6160	**F253_76.6 S1 M1SD4**	418	**F253_76.6 P71 BN71B4**	419
19.8	169	1.5	69.1	4000	**F202_69.1 S1 M1SD4**	414	**F202_69.1 P71 BN71B4**	415
21.0	157	2.6	65.3	5920	**F253_65.3 S1 M1SD4**	418	**F253_65.3 P71 BN71B4**	419
21.7	154	0.9	63.0	2800	**F102_63.0 S1 M1SD4**	410	**F102_63.0 P71 BN71B4**	411
22.1	152	1.6	61.9	4000	**F202_61.9 S1 M1SD4**	414	**F202_61.9 P71 BN71B4**	415
23.5	140	2.9	58.3	5750	**F253_58.3 S1 M1SD4**	418	**F253_58.3 P71 BN71B4**	419
24.2	139	1.0	56.7	2800	**F102_56.7 S1 M1SD4**	410	**F102_56.7 P71 BN71B4**	411
24.2	139	1.8	56.7	4000	**F202_56.7 S1 M1SD4**	414	**F202_56.7 P71 BN71B4**	415
27.0	124	2.0	50.7	3900	**F202_50.7 S1 M1SD4**	414	**F202_50.7 P71 BN71B4**	415
27.0	122	3.3	50.8	5540	**F253_50.8 S1 M1SD4**	418	**F253_50.8 P71 BN71B4**	419
28.1	119	1.2	48.7	2800	**F102_48.7 S1 M1SD4**	410	**F102_48.7 P71 BN71B4**	411
31	110	1.3	44.7	2800	**F102_44.7 S1 M1SD4**	410	**F102_44.7 P71 BN71B4**	411
31	110	2.3	44.8	3770	**F202_44.8 S1 M1SD4**	414	**F202_44.8 P71 BN71B4**	415
31	109	3.5	44.4	5370	**F252_44.4 S1 M1SD4**	418	**F252_44.4 P71 BN71B4**	419
33	103	2.4	41.8	3700	**F202_41.8 S1 M1SD4**	414	**F202_41.8 P71 BN71B4**	415
35	97	1.4	39.6	2800	**F102_39.6 S1 M1SD4**	410	**F102_39.6 P71 BN71B4**	411
36	93	2.7	37.9	3600	**F202_37.9 S1 M1SD4**	414	**F202_37.9 P71 BN71B4**	415
39	87	1.6	35.3	2800	**F102_35.3 S1 M1SD4**	410	**F102_35.3 P71 BN71B4**	411
41	81	3.1	33.1	3460	**F202_33.1 S1 M1SD4**	414	**F202_33.1 P71 BN71B4**	415
42	81	1.7	33.0	2800	**F102_33.0 S1 M1SD4**	410	**F102_33.0 P71 BN71B4**	411
45	75	3.4	30.4	3380	**F202_30.4 S1 M1SD4**	414	**F202_30.4 P71 BN71B4**	415
46	73	1.9	29.6	2800	**F102_29.6 S1 M1SD4**	410	**F102_29.6 P71 BN71B4**	411
53	63	2.2	25.8	2690	**F102_25.8 S1 M1SD4**	410	**F102_25.8 P71 BN71B4**	411
60	56	2.5	22.8	2600	**F102_22.8 S1 M1SD4**	410	**F102_22.8 P71 BN71B4**	411
71	47	2.9	19.3	2470	**F102_19.3 S1 M1SD4**	410	**F102_19.3 P71 BN71B4**	411
81	42	3.1	17.0	2380	**F102_17.0 S1 M1SD4**	410	**F102_17.0 P71 BN71B4**	411
94	36	3.3	14.6	2280	**F102_14.6 S1 M1SD4**	410	**F102_14.6 P71 BN71B4**	411
105	32	3.3	13.0	2200	**F102_13.0 S1 M1SD4**	410	**F102_13.0 P71 BN71B4**	411
119	28	3.4	11.5	2120	**F102_11.5 S1 M1SD4**	410	**F102_11.5 P71 BN71B4**	411
140	24	3.7	9.8	2010	**F102_9.8 S1 M1SD4**	410	**F102_9.8 P71 BN71B4**	411
160	21	3.9	8.6	1930	**F102_8.6 S1 M1SD4**	410	**F102_8.6 P71 BN71B4**	411
185	18	4.2	7.4	1850	**F102_7.4 S1 M1SD4**	410	**F102_7.4 P71 BN71B4**	411
193	17	5.4	14.6	1830	**F102_14.6 S05 M05C2**	410	**F102_14.6 P71 BN71A2**	411
216	16	5.5	13.0	1760	**F102_13.0 S05 M05C2**	410	**F102_13.0 P71 BN71A2**	411
244	14	5.7	11.5	1690	**F102_11.5 S05 M05C2**	410	**F102_11.5 P71 BN71A2**	411
289	12	6.3	9.8	1610	**F102_9.8 S05 M05C2**	410	**F102_9.8 P71 BN71A2**	411
329	10	6.6	8.6	1540	**F102_8.6 S05 M05C2**	410	**F102_8.6 P71 BN71A2**	411
381	9	7.1	7.4	1470	**F102_7.4 S05 M05C2**	410	**F102_7.4 P71 BN71A2**	411

0.55 kW

n_2 min-1	M_2 Nm	S	i	R_{n2} N	IE1		IEC IE1	
0.44	10909	1.3	2099	55000	**F904_2099 S2 M2SA6**	444	**F904_2099 P80 BN80B6**	445
0.47	10070	1.4	1937	55000	**F904_1937 S2 M2SA6**	444	**F904_1937 P80 BN80B6**	445
0.54	8884	0.9	1709	45000	**F804_1709 S2 M2SA6**	441	**F804_1709 P80 BN80B6**	442
0.54	8849	1.6	1702	55000	**F904_1702 S2 M2SA6**	444	**F904_1702 P80 BN80B6**	445
0.58	8201	1.0	1578	45000	**F804_1578 S2 M2SA6**	441	**F804_1578 P80 BN80B6**	442
0.59	8168	1.7	1571	55000	**F904_1571 S2 M2SA6**	444	**F904_1571 P80 BN80B6**	445
0.64	7422	1.9	1428	55000	**F904_1428 S2 M2SA6**	444	**F904_1428 P80 BN80B6**	445
0.66	7193	1.1	1384	45000	**F804_1384 S2 M2SA6**	441	**F804_1384 P80 BN80B6**	442
0.69	6885	1.2	1987	45000	**F804_1987 S1 M1LA4**	441	**F804_1987 P80 BN80A4**	442
0.75	6356	1.3	1834	45000	**F804_1834 S1 M1LA4**	441	**F804_1834 P80 BN80A4**	442
0.81	5923	1.4	1709	45000	**F804_1709 S1 M1LA4**	441	**F804_1709 P80 BN80A4**	442
0.87	5491	0.9	1585	35000	**F704_1585 S1 M1LA4**	438	**F704_1585 P80 BN80A4**	439
0.87	5467	1.5	1578	45000	**F804_1578 S1 M1LA4**	441	**F804_1578 P80 BN80A4**	442
0.93	5134	1.0	1481	35000	**F704_1481 S1 M1LA4**	438	**F704_1481 P80 BN80A4**	439
1.0	4739	1.1	1368	35000	**F704_1368 S1 M1LA4**	438	**F704_1368 P80 BN80A4**	439
1.0	4795	1.7	1384	45000	**F804_1384 S1 M1LA4**	441	**F804_1384 P80 BN80A4**	442
1.1	4427	1.8	1277	45000	**F804_1277 S1 M1LA4**	441	**F804_1277 P80 BN80A4**	442

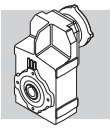

0.55 kW

n_2 min-1	M_2 Nm	S	i	R_{n2} N	IE1		IEC IE1	
1.2	4095	1.2	1182	35000	**F704_1182 S1 M1LA4**	438	**F704_1182 P80 BN80A4**	439
1.2	3972	2.0	1146	45000	**F804_1146 S1 M1LA4**	441	**F804_1146 P80 BN80A4**	442
1.3	3780	1.3	1091	35000	**F704_1091 S1 M1LA4**	438	**F704_1091 P80 BN80A4**	439
1.3	3667	2.2	1058	45000	**F804_1058 S1 M1LA4**	441	**F804_1058 P80 BN80A4**	442
1.4	3323	0.9	958.9	20000	**F604_958.9 S1 M1LA4**	434	**F604_958.9 P80 BN80A4**	435
1.4	3377	1.5	974.4	35000	**F704_974.4 S1 M1LA4**	438	**F704_974.4 P80 BN80A4**	439
1.5	3117	1.6	899.4	35000	**F704_899.4 S1 M1LA4**	438	**F704_899.4 P80 BN80A4**	439
1.5	3109	2.6	897.3	45000	**F804_897.3 S1 M1LA4**	441	**F804_897.3 P80 BN80A4**	442
1.6	3067	0.9	885.1	20000	**F604_885.1 S1 M1LA4**	434	**F604_885.1 P80 BN80A4**	435
1.7	2849	1.8	822.2	35000	**F704_822.2 S1 M1LA4**	438	**F704_822.2 P80 BN80A4**	439
1.8	2684	3.0	774.4	45000	**F804_774.4 S1 M1LA4**	441	**F804_774.4 P80 BN80A4**	442
1.9	2477	3.2	714.9	45000	**F804_714.9 S1 M1LA4**	441	**F804_714.9 P80 BN80A4**	442
2.1	2295	1.3	662.4	20000	**F604_662.4 S1 M1LA4**	434	**F604_662.4 P80 BN80A4**	435
2.1	2278	2.2	657.4	35000	**F704_657.4 S1 M1LA4**	438	**F704_657.4 P80 BN80A4**	439
2.3	2119	1.4	611.4	20000	**F604_611.4 S1 M1LA4**	434	**F604_611.4 P80 BN80A4**	435
2.3	2103	2.4	606.8	35000	**F704_606.8 S1 M1LA4**	438	**F704_606.8 P80 BN80A4**	439
2.6	1838	1.0	530.5	12000	**F514_530.5 S1 M1LA4**	430	**F514_530.5 P80 BN80A4**	431
2.6	1839	1.6	530.7	20000	**F604_530.7 S1 M1LA4**	434	**F604_530.7 P80 BN80A4**	435
2.7	1769	2.8	510.4	35000	**F704_510.4 S1 M1LA4**	438	**F704_510.4 P80 BN80A4**	439
2.8	1698	1.7	489.8	20000	**F604_489.8 S1 M1LA4**	434	**F604_489.8 P80 BN80A4**	435
2.9	1633	3.1	471.2	35000	**F704_471.2 S1 M1LA4**	438	**F704_471.2 P80 BN80A4**	439
3.2	1487	1.2	429.1	12000	**F514_429.1 S1 M1LA4**	430	**F514_429.1 P80 BN80A4**	431
3.2	1499	1.9	432.6	20000	**F604_432.6 S1 M1LA4**	434	**F604_432.6 P80 BN80A4**	435
3.5	1384	2.1	399.3	20000	**F604_399.3 S1 M1LA4**	434	**F604_399.3 P80 BN80A4**	435
3.9	1248	1.4	352.5	12000	**F513_352.5 S1 M1LA4**	430	**F513_352.5 P80 BN80A4**	431
4.0	1221	0.9	344.8	8500	**F413_344.8 S1 M1LA4**	426	**F413_344.8 P80 BN80A4**	427
4.0	1184	2.4	341.7	20000	**F604_341.7 S1 M1LA4**	434	**F604_341.7 P80 BN80A4**	435
4.3	1124	1.6	317.3	12000	**F513_317.3 S1 M1LA4**	430	**F513_317.3 P80 BN80A4**	431
4.4	1093	2.7	315.4	20000	**F604_315.4 S1 M1LA4**	434	**F604_315.4 P80 BN80A4**	435
4.7	1050	1.0	296.6	8500	**F413_296.6 S1 M1LA4**	426	**F413_296.6 P80 BN80A4**	427
4.8	1013	1.8	285.9	12000	**F513_285.9 S1 M1LA4**	430	**F513_285.9 P80 BN80A4**	431
5.2	945	1.2	266.9	8500	**F413_266.9 S1 M1LA4**	426	**F413_266.9 P80 BN80A4**	427
5.3	928	1.9	262.1	12000	**F513_262.1 S1 M1LA4**	430	**F513_262.1 P80 BN80A4**	431
5.7	850	1.3	240.1	8500	**F413_240.1 S1 M1LA4**	426	**F413_240.1 P80 BN80A4**	427
5.8	849	2.1	239.8	12000	**F513_239.8 S1 M1LA4**	430	**F513_239.8 P80 BN80A4**	431
6.3	780	1.4	220.1	8500	**F413_220.1 S1 M1LA4**	426	**F413_220.1 P80 BN80A4**	427
6.4	768	2.3	216.9	12000	**F513_216.9 S1 M1LA4**	430	**F513_216.9 P80 BN80A4**	431
6.8	717	2.5	202.4	12000	**F513_202.4 S1 M1LA4**	430	**F513_202.4 P80 BN80A4**	431
6.9	704	1.6	198.9	8500	**F413_198.9 S1 M1LA4**	426	**F413_198.9 P80 BN80A4**	427
7.4	657	0.9	185.4	6500	**F313_185.4 S1 M1LA4**	422	**F313_185.4 P80 BN80A4**	423
7.6	640	1.7	180.7	8500	**F413_180.7 S1 M1LA4**	426	**F413_180.7 P80 BN80A4**	427
8.2	597	1.8	168.7	8500	**F413_168.7 S1 M1LA4**	426	**F413_168.7 P80 BN80A4**	427
8.3	591	1.0	166.8	6500	**F313_166.8 S1 M1LA4**	422	**F313_166.8 P80 BN80A4**	423
8.3	587	3.1	165.6	12000	**F513_165.6 S1 M1LA4**	430	**F513_165.6 P80 BN80A4**	431
9.2	534	1.1	150.8	6500	**F313_150.8 S1 M1LA4**	422	**F313_150.8 P80 BN80A4**	423
9.8	498	1.2	140.7	6500	**F313_140.7 S1 M1LA4**	422	**F313_140.7 P80 BN80A4**	423
10.3	476	2.3	134.4	8500	**F413_134.4 S1 M1LA4**	426	**F413_134.4 P80 BN80A4**	427
10.7	455	1.3	128.4	6500	**F313_128.4 S1 M1LA4**	422	**F313_128.4 P80 BN80A4**	423
12.2	400	1.0	113.0	6130	**F253_113.0 S1 M1LA4**	418	**F253_113.0 P80 BN80A4**	419
12.3	399	1.5	112.5	6500	**F313_112.5 S1 M1LA4**	422	**F313_112.5 P80 BN80A4**	423
13.0	375	2.9	106.0	8500	**F413_106.0 S1 M1LA4**	426	**F413_106.0 P80 BN80A4**	427
13.1	373	1.1	105.4	6070	**F253_105.4 S1 M1LA4**	418	**F253_105.4 P80 BN80A4**	419
13.5	361	1.7	101.9	6500	**F313_101.9 S1 M1LA4**	422	**F313_101.9 P80 BN80A4**	423
14.5	338	1.2	95.5	5980	**F253_95.5 S1 M1LA4**	418	**F253_95.5 P80 BN80A4**	419
15.8	309	1.9	87.4	6500	**F313_87.4 S1 M1LA4**	422	**F313_87.4 P80 BN80A4**	423
16.5	295	1.4	83.4	5840	**F253_83.4 S1 M1LA4**	418	**F253_83.4 P80 BN80A4**	419
17.5	279	2.1	78.9	6500	**F313_78.9 S1 M1LA4**	422	**F313_78.9 P80 BN80A4**	423
18.0	278	0.9	76.8	4000	**F202_76.8 S1 M1LA4**	414	**F202_76.8 P80 BN80A4**	415
18.0	271	1.5	76.6	5750	**F253_76.6 S1 M1LA4**	418	**F253_76.6 P80 BN80A4**	419
20.0	250	1.0	69.1	3980	**F202_69.1 S1 M1LA4**	414	**F202_69.1 P80 BN80A4**	415
20.0	245	2.5	69.1	6500	**F313_69.1 S1 M1LA4**	422	**F313_69.1 P80 BN80A4**	423
21.1	231	1.7	65.3	5570	**F253_65.3 S1 M1LA4**	418	**F253_65.3 P80 BN80A4**	419
22.1	221	2.7	62.8	6500			**F313_62.8 P80 BN80A4**	423
22.3	224	1.1	61.9	3890	**F202_61.9 S1 M1LA4**	414	**F202_61.9 P80 BN80A4**	415
23.7	207	1.9	58.3	5430	**F253_58.3 S1 M1LA4**	418	**F253_58.3 P80 BN80A4**	419

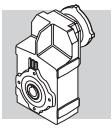

0.55 kW

n_2 min-1	M_2 Nm	S	i	R_{n2} N	IE1		IEC IE1	
24.3	205	1.2	56.7	3810	**F202_56.7 S1 M1LA4**	414	**F202_56.7 P80 BN80A4**	415
26.7	183	3.3	52.1	6500			**F313_52.1 P80 BN80A4**	423
27.2	184	1.4	50.7	3720	**F202_50.7 S1 M1LA4**	414	**F202_50.7 P80 BN80A4**	415
27.2	180	2.2	50.8	5270	**F253_50.8 S1 M1LA4**	418	**F253_50.8 P80 BN80A4**	419
29.2	167	3.5	47.5	6500			**F313_47.5 P80 BN80A4**	423
31	162	1.5	44.8	3610	**F202_44.8 S1 M1LA4**	414	**F202_44.8 P80 BN80A4**	415
31	161	2.4	44.4	5140	**F252_44.4 S1 M1LA4**	418	**F252_44.4 P80 BN80A4**	419
31	160	2.5	45.6	5130			**F253_45.6 P80 BN80A4**	419
33	151	1.7	41.8	3550	**F202_41.8 S1 M1LA4**	414	**F202_41.8 P80 BN80A4**	415
34	147	2.5	40.7	5030	**F252_40.7 S1 M1LA4**	418	**F252_40.7 P80 BN80A4**	419
35	143	1.0	39.6	2800	**F102_39.6 S1 M1LA4**	410	**F102_39.6 P80 BN80A4**	411
36	137	1.8	37.9	3460	**F202_37.9 S1 M1LA4**	414	**F202_37.9 P80 BN80A4**	415
38	132	3.0	36.4	4890	**F252_36.4 S1 M1LA4**	418	**F252_36.4 P80 BN80A4**	419
39	128	1.1	35.3	2800	**F102_35.3 S1 M1LA4**	410	**F102_35.3 P80 BN80A4**	411
42	119	1.2	33.0	2750	**F102_33.0 S1 M1LA4**	410	**F102_33.0 P80 BN80A4**	411
42	120	2.1	33.1	3340	**F202_33.1 S1 M1LA4**	414	**F202_33.1 P80 BN80A4**	415
43	116	3.4	32.2	4730	**F252_32.2 S1 M1LA4**	418	**F252_32.2 P80 BN80A4**	419
45	110	2.3	30.4	3260	**F202_30.4 S1 M1LA4**	414	**F202_30.4 P80 BN80A4**	415
47	107	1.3	29.6	2680	**F102_29.6 S1 M1LA4**	410	**F102_29.6 P80 BN80A4**	411
53	94	2.6	25.9	3130	**F202_25.9 S1 M1LA4**	414	**F202_25.9 P80 BN80A4**	415
54	93	1.5	25.8	2590	**F102_25.8 S1 M1LA4**	410	**F102_25.8 P80 BN80A4**	411
60	83	1.7	22.8	2510	**F102_22.8 S1 M1LA4**	410	**F102_22.8 P80 BN80A4**	411
60	84	2.8	23.1	3030	**F202_23.1 S1 M1LA4**	414	**F202_23.1 P80 BN80A4**	415
68	73	3.1	20.2	2910	**F202_20.2 S1 M1LA4**	414	**F202_20.2 P80 BN80A4**	415
71	70	1.9	19.3	2400	**F102_19.3 S1 M1LA4**	410	**F102_19.3 P80 BN80A4**	411
77	65	3.3	18.1	2820	**F202_18.1 S1 M1LA4**	414	**F202_18.1 P80 BN80A4**	415
81	61	2.1	17.0	2310	**F102_17.0 S1 M1LA4**	410	**F102_17.0 P80 BN80A4**	411
94	53	2.2	14.6	2220	**F102_14.6 S1 M1LA4**	410	**F102_14.6 P80 BN80A4**	411
106	47	2.2	13.0	2140	**F102_13.0 S1 M1LA4**	410	**F102_13.0 P80 BN80A4**	411
120	42	2.3	11.5	2070	**F102_11.5 S1 M1LA4**	410	**F102_11.5 P80 BN80A4**	411
141	35	2.5	9.8	1970	**F102_9.8 S1 M1LA4**	410	**F102_9.8 P80 BN80A4**	411
161	31	2.6	8.6	1890	**F102_8.6 S1 M1LA4**	410	**F102_8.6 P80 BN80A4**	411
186	27	2.8	7.4	1810	**F102_7.4 S1 M1LA4**	410	**F102_7.4 P80 BN80A4**	411
193	26	3.6	14.6	1800	**F102_14.6 S1 M1SD2**	410	**F102_14.6 P71 BN71B2**	411
216	23	3.7	13.0	1730	**F102_13.0 S1 M1SD2**	410	**F102_13.0 P71 BN71B2**	411
244	20	3.8	11.5	1670	**F102_11.5 S1 M1SD2**	410	**F102_11.5 P71 BN71B2**	411
289	17	4.2	9.8	1590	**F102_9.8 S1 M1SD2**	410	**F102_9.8 P71 BN71B2**	411
329	15	4.4	8.6	1530	**F102_8.6 S1 M1SD2**	410	**F102_8.6 P71 BN71B2**	411
381	13	4.8	7.4	1460	**F102_7.4 S1 M1SD2**	410	**F102_7.4 P71 BN71B2**	411

0.75 kW

n_2 min-1	M_2 Nm	S	i	R_{n2} N	IE2		IEC IE2	
0.45	14391	1.0	2098.7	55000	**F904_2099 S3 ME3SA6**	444	**F904_2099 P90 BE90S6**	445
0.49	13284	1.1	1937.3	55000	**F904_1937 S3 ME3SA6**	444	**F904_1937 P90 BE90S6**	445
0.55	11673	1.2	1702.3	55000	**F904_1702 S3 ME3SA6**	444	**F904_1702 P90 BE90S6**	445
0.60	10775	1.3	1571.4	55000	**F904_1571 S3 ME3SA6**	444	**F904_1571 P90 BE90S6**	445
0.66	9791	1.4	1427.9	55000	**F904_1428 S3 ME3SA6**	444	**F904_1428 P90 BE90S6**	445
0.68	9444	1.5	2098.7	55000	**F904_2099 S2 ME2SB4**	444	**F904_2099 P80 BE80B4**	445
0.72	8941	0.9	1986.8	45000	**F804_1987 S2 ME2SB4**	441	**F804_1987 P80 BE80B4**	442
0.74	8718	1.6	1937.3	55000	**F904_1937 S2 ME2SB4**	444	**F904_1937 P80 BE80B4**	445
0.78	8253	1.0	1834.0	45000	**F804_1834 S2 ME2SB4**	441	**F804_1834 P80 BE80B4**	442
0.84	7691	1.0	1709.1	45000	**F804_1709 S2 ME2SB4**	441	**F804_1709 P80 BE80B4**	442
0.84	7660	1.8	1702.3	55000	**F904_1702 S2 ME2SB4**	444	**F904_1702 P80 BE80B4**	445
0.91	7099	1.1	1577.6	45000	**F804_1578 S2 ME2SB4**	441	**F804_1578 P80 BE80B4**	442
0.91	7071	2.0	1571.4	55000	**F904_1571 S2 ME2SB4**	444	**F904_1571 P80 BE80B4**	445
1.0	6426	2.2	1427.9	55000	**F904_1428 S2 ME2SB4**	444	**F904_1428 P80 BE80B4**	445
1.0	6227	1.3	1383.8	45000	**F804_1384 S2 ME2SB4**	441	**F804_1384 P80 BE80B4**	442

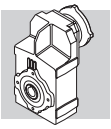

0.75 kW

n_2 min-1	M_2 Nm	S	i	R_{n2} N	IE2		IEC IE2	
1.1	5931	2.4	1318.1	55000	F904_1318 S2 ME2SB4	444	F904_1318 P80 BE80B4	445
1.1	5748	1.4	1277.3	45000	F804_1277 S2 ME2SB4	441	F804_1277 P80 BE80B4	442
1.2	5422	2.6	1204.9	55000	F904_1205 S2 ME2SB4	444	F904_1205 P80 BE80B4	445
1.2	5318	0.9	1181.8	35000	F704_1182 S2 ME2SB4	438	F704_1182 P80 BE80B4	439
1.2	5158	1.6	1146.2	45000	F804_1146 S2 ME2SB4	441	F804_1146 P80 BE80B4	442
1.3	5005	2.8	1112.3	55000	F904_1112 S2 ME2SB4	444	F904_1112 P80 BE80B4	445
1.3	4909	1.0	1090.9	35000	F704_1091 S2 ME2SB4	438	F704_1091 P80 BE80B4	439
1.4	4761	1.7	1058.1	45000	F804_1058 S2 ME2SB4	441	F804_1058 P80 BE80B4	442
1.5	4437	3.2	986.0	55000	F904_986.0 S2 ME2SB4	444	F904_986.0 P80 BE80B4	445
1.5	4385	1.1	974.4	35000	F704_974.4 S2 ME2SB4	438	F704_974.4 P80 BE80B4	439
1.5	4374	1.8	972.0	45000	F804_972.0 S2 ME2SB4	441	F804_972.0 P80 BE80B4	442
1.6	4096	3.4	910.2	55000	F904_910.2 S2 ME2SB4	444	F904_910.2 P80 BE80B4	445
1.6	4047	1.2	899.4	35000	F704_899.4 S2 ME2SB4	438	F704_899.4 P80 BE80B4	439
1.6	4038	2.0	897.3	45000	F804_897.3 S2 ME2SB4	441	F804_897.3 P80 BE80B4	442
1.7	3700	1.4	822.2	35000	F704_822.2 S2 ME2SB4	438	F704_822.2 P80 BE80B4	439
1.8	3485	2.3	774.4	45000	F804_774.4 S2 ME2SB4	441	F804_774.4 P80 BE80B4	442
1.9	3415	1.5	759.0	35000	F704_759.0 S2 ME2SB4	438	F704_759.0 P80 BE80B4	439
2.0	3217	2.5	714.9	45000	F804_714.9 S2 ME2SB4	441	F804_714.9 P80 BE80B4	442
2.2	2981	1.0	662.4	20000	F604_662.4 S2 ME2SB4	434	F604_662.4 P80 BE80B4	435
2.2	2958	1.7	657.4	35000	F704_657.4 S2 ME2SB4	438	F704_657.4 P80 BE80B4	439
2.3	2751	1.1	611.4	20000	F604_611.4 S2 ME2SB4	434	F604_611.4 P80 BE80B4	435
2.3	2749	2.9	610.9	45000	F804_610.9 S2 ME2SB4	441	F804_610.9 P80 BE80B4	442
2.4	2731	1.8	606.8	35000	F704_606.8 S2 ME2SB4	438	F704_606.8 P80 BE80B4	439
2.5	2537	3.2	563.9	45000	F804_563.9 S2 ME2SB4	441	F804_563.9 P80 BE80B4	442
2.7	2388	1.2	530.7	20000	F604_530.7 S2 ME2SB4	434	F604_530.7 P80 BE80B4	435
2.8	2297	2.2	510.4	35000	F704_510.4 S2 ME2SB4	438	F704_510.4 P80 BE80B4	439
2.9	2204	1.3	489.8	20000	F604_489.8 S2 ME2SB4	434	F604_489.8 P80 BE80B4	435
3.0	2120	2.4	471.2	35000	F704_471.2 S2 ME2SB4	438	F704_471.2 P80 BE80B4	439
3.3	1947	1.5	432.6	20000	F604_432.6 S2 ME2SB4	434	F604_432.6 P80 BE80B4	435
3.3	1931	0.9	429.1	12000	F514_429.1 S2 ME2SB4	430	F514_429.1 P80 BE80B4	431
3.5	1816	2.8	403.5	35000	F704_403.5 S2 ME2SB4	438	F704_403.5 P80 BE80B4	439
3.6	1797	1.6	399.3	20000	F604_399.3 S2 ME2SB4	434	F604_399.3 P80 BE80B4	435
3.8	1676	3.0	372.5	35000	F704_372.5 S2 ME2SB4	438	F704_372.5 P80 BE80B4	439
4.1	1639	1.1	352.5	12000	F513_352.5 S2 ME2SB4	430	F513_352.5 P80 BE80B4	431
4.2	1538	1.9	341.7	20000	F604_341.7 S2 ME2SB4	434	F604_341.7 P80 BE80B4	435
4.5	1475	1.2	317.3	12000	F513_317.3 S2 ME2SB4	430	F513_317.3 P80 BE80B4	431
4.5	1419	2.0	315.4	20000	F604_315.4 S2 ME2SB4	434	F604_315.4 P80 BE80B4	435
4.7	1370	3.7	304.3	35000	F704_304.3 S2 ME2SB4	438	F704_304.3 P80 BE80B4	439
5.0	1330	1.4	285.9	12000	F513_285.9 S2 ME2SB4	430	F513_285.9 P80 BE80B4	431
5.1	1305	2.2	280.7	20000	F603_280.7 S2 ME2SB4	434	F603_280.7 P80 BE80B4	435
5.5	1219	1.5	262.1	12000	F513_262.1 S2 ME2SB4	430	F513_262.1 P80 BE80B4	431
5.5	1205	2.4	259.1	20000	F603_259.1 S2 ME2SB4	434	F603_259.1 P80 BE80B4	435
6.0	1117	1.0	240.1	8500	F413_240.1 S2 ME2SB4	426	F413_240.1 P80 BE80B4	427
6.0	1115	1.6	239.8	12000	F513_239.8 S2 ME2SB4	430	F513_239.8 P80 BE80B4	431
6.1	1096	2.6	235.8	20000	F603_235.8 S2 ME2SB4	434	F603_235.8 P80 BE80B4	435
6.5	1024	1.1	220.1	8500	F413_220.1 S2 ME2SB4	426	F413_220.1 P80 BE80B4	427
6.6	1012	2.9	217.6	20000	F603_217.6 S2 ME2SB4	434	F603_217.6 P80 BE80B4	435
6.6	1008	1.8	216.9	12000	F513_216.9 S2 ME2SB4	430	F513_216.9 P80 BE80B4	431
7.1	941	1.9	202.4	12000	F513_202.4 S2 ME2SB4	430	F513_202.4 P80 BE80B4	431
7.1	936	3.1	201.4	20000	F603_201.4 S2 ME2SB4	434	F603_201.4 P80 BE80B4	435
7.2	925	1.2	198.9	8500	F413_198.9 S2 ME2SB4	426	F413_198.9 P80 BE80B4	427
7.7	864	3.4	185.9	20000	F603_185.9 S2 ME2SB4	434	F603_185.9 P80 BE80B4	435
7.9	840	1.3	180.7	8500	F413_180.7 S2 ME2SB4	426	F413_180.7 P80 BE80B4	427
8.5	784	1.4	168.7	8500	F413_168.7 S2 ME2SB4	426	F413_168.7 P80 BE80B4	427
8.6	770	2.3	165.6	12000	F513_165.6 S2 ME2SB4	430	F513_165.6 P80 BE80B4	431
8.8	757	3.8	162.9	20000	F603_162.9 S2 ME2SB4	434	F603_162.9 P80 BE80B4	435
10.2	654	0.9	140.7	6500	F313_140.7 S2 ME2SB4	422	F313_140.7 P80 BE80B4	423
10.6	625	1.8	134.4	8500	F413_134.4 S2 ME2SB4	426	F413_134.4 P80 BE80B4	427
11.0	604	3.0	129.9	12000	F513_129.9 S2 ME2SB4	430	F513_129.9 P80 BE80B4	431
11.1	597	1.0	128.4	6500	F313_128.4 S2 ME2SB4	422	F313_128.4 P80 BE80B4	423

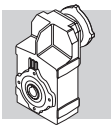

0.75 kW

n_2 min-1	M_2 Nm	S	i	R_{n2} N	IE2		IEC IE2	
12.7	523	1.1	112.5	6500	**F313_112.5 S2 ME2SB4**	422	**F313_112.5 P80 BE80B4**	423
13.5	493	2.2	106.0	8500	**F413_106.0 S2 ME2SB4**	426	**F413_106.0 P80 BE80B4**	427
14.0	474	1.3	101.9	6500	**F313_101.9 S2 ME2SB4**	422	**F313_101.9 P80 BE80B4**	423
15.0	444	0.9	95.5	5450	**F253_95.5 S2 ME2SB4**	418	**F253_95.5 P80 BE80B4**	419
16.4	406	1.5	87.4	6500	**F313_87.4 S2 ME2SB4**	422	**F313_87.4 P80 BE80B4**	423
16.8	395	2.8	84.9	8500	**F413_84.9 S2 ME2SB4**	426	**F413_84.9 P80 BE80B4**	427
17.1	388	1.0	83.4	5350	**F253_83.4 S2 ME2SB4**	418	**F253_83.4 P80 BE80B4**	419
18.1	367	1.6	78.9	6500	**F313_78.9 S2 ME2SB4**	422	**F313_78.9 P80 BE80B4**	423
18.7	356	1.1	76.6	5300	**F253_76.6 S2 ME2SB4**	418	**F253_76.6 P80 BE80B4**	419
20.7	321	1.9	69.1	6500	**F313_69.1 S2 ME2SB4**	422	**F313_69.1 P80 BE80B4**	423
21.5	309	3.6	66.5	8500	**F413_66.5 S2 ME2SB4**	426	**F413_66.5 P80 BE80B4**	427
21.9	304	1.3	65.3	5180	**F253_65.3 S2 ME2SB4**	418	**F253_65.3 P80 BE80B4**	419
22.8	292	2.1	62.8	6500	**F313_62.8 S2 ME2SB4**	422	**F313_62.8 P80 BE80B4**	423
24.5	271	1.5	58.3	5080	**F253_58.3 S2 ME2SB4**	418	**F253_58.3 P80 BE80B4**	419
25.2	269	0.9	56.7	3590	**F202_56.7 S2 ME2SB4**	414	**F202_56.7 P80 BE80B4**	415
27.5	242	2.5	52.1	6500	**F313_52.1 S2 ME2SB4**	422	**F313_52.1 P80 BE80B4**	423
28.2	236	1.7	50.8	4960	**F253_50.8 S2 ME2SB4**	418	**F253_50.8 P80 BE80B4**	419
28.2	241	1.0	50.7	3510	**F202_50.7 S2 ME2SB4**	414	**F202_50.7 P80 BE80B4**	415
30	221	2.6	47.5	6500	**F313_47.5 S2 ME2SB4**	422	**F313_47.5 P80 BE80B4**	423
31	212	1.9	45.6	4860	**F253_45.6 S2 ME2SB4**	418	**F253_45.6 P80 BE80B4**	419
32	213	1.2	44.8	3420	**F202_44.8 S2 ME2SB4**	414	**F202_44.8 P80 BE80B4**	415
32	212	2.8	44.6	6500	**F312_44.6 S2 ME2SB4**	422	**F312_44.6 P80 BE80B4**	423
32	211	1.8	44.4	4890	**F252_44.4 S2 ME2SB4**	418	**F252_44.4 P80 BE80B4**	419
34	199	1.3	41.8	3370	**F202_41.8 S2 ME2SB4**	414	**F202_41.8 P80 BE80B4**	415
35	193	1.9	40.7	4790	**F252_40.7 S2 ME2SB4**	418	**F252_40.7 P80 BE80B4**	419
35	192	3.1	40.4	6500	**F312_40.4 S2 ME2SB4**	422	**F312_40.4 P80 BE80B4**	423
38	180	1.4	37.9	3300	**F202_37.9 S2 ME2SB4**	414	**F202_37.9 P80 BE80B4**	415
38	179	3.4	37.7	6500	**F312_37.7 S2 ME2SB4**	422	**F312_37.7 P80 BE80B4**	423
39	173	2.3	36.4	4680	**F252_36.4 S2 ME2SB4**	418	**F252_36.4 P80 BE80B4**	419
43	157	1.6	33.1	3200	**F202_33.1 S2 ME2SB4**	414	**F202_33.1 P80 BE80B4**	415
44	153	2.6	32.2	4540	**F252_32.2 S2 ME2SB4**	418	**F252_32.2 P80 BE80B4**	419
47	144	1.7	30.4	3140	**F202_30.4 S2 ME2SB4**	414	**F202_30.4 P80 BE80B4**	415
48	143	2.8	30.0	4470	**F252_30.0 S2 ME2SB4**	418	**F252_30.0 P80 BE80B4**	419
48	141	1.0	29.6	2550	**F102_29.6 S2 ME2SB4**	410	**F102_29.6 P80 BE80B4**	411
53	129	3.1	27.2	4360	**F252_27.2 S2 ME2SB4**	418	**F252_27.2 P80 BE80B4**	419
55	123	1.9	25.9	3020	**F202_25.9 S2 ME2SB4**	414	**F202_25.9 P80 BE80B4**	415
55	122	1.1	25.8	2470	**F102_25.8 S2 ME2SB4**	410	**F102_25.8 P80 BE80B4**	411
60	113	3.5	23.8	4210	**F252_23.8 S2 ME2SB4**	418	**F252_23.8 P80 BE80B4**	419
62	110	2.1	23.1	2930	**F202_23.1 S2 ME2SB4**	414	**F202_23.1 P80 BE80B4**	415
63	108	1.3	22.8	2400	**F102_22.8 S2 ME2SB4**	410	**F102_22.8 P80 BE80B4**	411
71	96	2.3	20.2	2830	**F202_20.2 S2 ME2SB4**	414	**F202_20.2 P80 BE80B4**	415
74	92	1.5	19.3	2310	**F102_19.3 S2 ME2SB4**	410	**F102_19.3 P80 BE80B4**	411
79	86	2.5	18.1	2740	**F202_18.1 S2 ME2SB4**	414	**F202_18.1 P80 BE80B4**	415
84	81	1.6	17.0	2230	**F102_17.0 S2 ME2SB4**	410	**F102_17.0 P80 BE80B4**	411
97	70	2.9	14.8	2600	**F202_14.8 S2 ME2SB4**	414	**F202_14.8 P80 BE80B4**	415
98	70	1.7	14.6	2150	**F102_14.6 S2 ME2SB4**	410	**F102_14.6 P80 BE80B4**	411
110	62	1.7	13.0	2070	**F102_13.0 S2 ME2SB4**	410	**F102_13.0 P80 BE80B4**	411
124	55	1.8	11.5	2010	**F102_11.5 S2 ME2SB4**	410	**F102_11.5 P80 BE80B4**	411
146	46	1.9	9.8	1920	**F102_9.8 S2 ME2SB4**	410	**F102_9.8 P80 BE80B4**	411
167	41	2.0	8.6	1850	**F102_8.6 S2 ME2SB4**	410	**F102_8.6 P80 BE80B4**	411
193	35	2.2	7.4	1770	**F102_7.4 S2 ME2SB4**	410	**F102_7.4 P80 BE80B4**	411
195	35	2.7	14.6	1770	**F102_14.6 S2 ME2SA2**	410	**F102_14.6 P80 BE80A2**	411
219	31	2.7	13.0	1710	**F102_13.0 S2 ME2SA2**	410	**F102_13.0 P80 BE80A2**	411
247	28	2.8	11.5	1650	**F102_11.5 S2 ME2SA2**	410	**F102_11.5 P80 BE80A2**	411
292	23	3.1	9.8	1570	**F102_9.8 S2 ME2SA2**	410	**F102_9.8 P80 BE80A2**	411
332	20.5	3.2	8.6	1510	**F102_8.6 S2 ME2SA2**	410	**F102_8.6 P80 BE80A2**	411
385	17.7	3.6	7.4	1440	**F102_7.4 S2 ME2SA2**	410	**F102_7.4 P80 BE80A2**	411

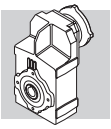

1.1 kW

n_2 min-1	M_2 Nm	S	i	R_{n2} N	IE2		IEC IE2	
0.60	15694	0.9	1571.4	55000	**F904_1571 S3 ME3LA6**	444	**F904_1571 P100 BE100M6**	445
0.66	14285	1.0	1427.9	55000	**F904_1428 S3 ME3LA6**	444	**F904_1428 P100 BE100M6**	445
0.68	13977	1.0	2098.7	55000	**F904_2099 S3 ME3SA4**	444	**F904_2099 P90 BE90S4**	445
0.74	12902	1.1	1937.3	55000	**F904_1937 S3 ME3SA4**	444	**F904_1937 P90 BE90S4**	445
0.84	11337	1.2	1702.3	55000	**F904_1702 S3 ME3SA4**	444	**F904_1702 P90 BE90S4**	445
0.91	10465	1.3	1571.4	55000	**F904_1571 S3 ME3SA4**	444	**F904_1571 P90 BE90S4**	445
1.0	9510	1.5	1427.9	55000	**F904_1428 S3 ME3SA4**	444	**F904_1428 P90 BE90S4**	445
1.1	8778	1.6	1318.1	55000	**F904_1318 S3 ME3SA4**	444	**F904_1318 P90 BE90S4**	445
1.1	8507	0.9	1277.3	45000	**F804_1277 S3 ME3SA4**	441	**F804_1277 P90 BE90S4**	442
1.2	8025	1.7	1204.9	55000	**F904_1205 S3 ME3SA4**	444	**F904_1205 P90 BE90S4**	445
1.2	7634	1.0	1146.2	45000	**F804_1146 S3 ME3SA4**	441	**F804_1146 P90 BE90S4**	442
1.3	7408	1.9	1112.3	55000	**F904_1112 S3 ME3SA4**	444	**F904_1112 P90 BE90S4**	445
1.4	7047	1.1	1058.1	45000	**F804_1058 S3 ME3SA4**	441	**F804_1058 P90 BE90S4**	442
1.5	6567	2.1	986.0	55000	**F904_986.0 S3 ME3SA4**	444	**F904_986.0 P90 BE90S4**	445
1.5	6474	1.2	972.0	45000	**F804_972.0 S3 ME3SA4**	441	**F804_972.0 P90 BE90S4**	442
1.6	6062	2.3	910.2	55000	**F904_910.2 S3 ME3SA4**	444	**F904_910.2 P90 BE90S4**	445
1.6	5976	1.3	897.3	45000	**F804_897.3 S3 ME3SA4**	441	**F804_897.3 P90 BE90S4**	442
1.7	5476	0.9	822.2	35000	**F704_822.2 S3 ME3SA4**	438	**F704_822.2 P90 BE90S4**	439
1.8	5158	1.6	774.4	45000	**F804_774.4 S3 ME3SA4**	441	**F804_774.4 P90 BE90S4**	442
1.8	5151	2.7	773.4	55000	**F904_773.4 S3 ME3SA4**	444	**F904_773.4 P90 BE90S4**	445
1.9	5055	1.0	759.0	35000	**F704_759.0 S3 ME3SA4**	438	**F704_759.0 P90 BE90S4**	439
1.9	4893	1.6	489.1	45000	**F804_489.1 S3 ME3LA6**	441	**F804_489.1 P100 BE100M6**	442
2.0	4761	1.7	714.9	45000	**F804_714.9 S3 ME3SA4**	441	**F804_714.9 P90 BE90S4**	442
2.0	4755	2.9	714.0	55000	**F904_714.0 S3 ME3SA4**	444	**F904_714.0 P90 BE90S4**	445
2.1	4517	1.8	451.5	45000	**F804_451.5 S3 ME3LA6**	441	**F804_451.5 P100 BE100M6**	442
2.2	4378	1.1	657.4	35000	**F704_657.4 S3 ME3SA4**	438	**F704_657.4 P90 BE90S4**	439
2.3	4167	3.4	625.6	55000	**F904_625.6 S3 ME3SA4**	444	**F904_625.6 P90 BE90S4**	445
2.3	4068	2.0	610.9	45000	**F804_610.9 S3 ME3SA4**	441	**F804_610.9 P90 BE90S4**	442
2.4	4042	1.2	606.8	35000	**F704_606.8 S3 ME3SA4**	438	**F704_606.8 P90 BE90S4**	439
2.5	3846	3.6	577.5	55000	**F904_577.5 S3 ME3SA4**	444	**F904_577.5 P90 BE90S4**	445
2.5	3755	2.1	563.9	45000	**F804_563.9 S3 ME3SA4**	441	**F804_563.9 P90 BE90S4**	442
2.8	3399	1.5	510.4	35000	**F704_510.4 S3 ME3SA4**	438	**F704_510.4 P90 BE90S4**	439
2.9	3262	0.9	489.8	20000	**F604_489.8 S3 ME3SA4**	434	**F604_489.8 P90 BE90S4**	435
2.9	3258	2.5	489.1	45000	**F804_489.1 S3 ME3SA4**	441	**F804_489.1 P90 BE90S4**	442
3.0	3138	1.6	471.2	35000	**F704_471.2 S3 ME3SA4**	438	**F704_471.2 P90 BE90S4**	439
3.2	3007	2.7	451.5	45000	**F804_451.5 S3 ME3SA4**	441	**F804_451.5 P90 BE90S4**	442
3.3	2881	1.0	432.6	20000	**F604_432.6 S3 ME3SA4**	434	**F604_432.6 P90 BE90S4**	435
3.5	2687	1.9	403.5	35000	**F704_403.5 S3 ME3SA4**	438	**F704_403.5 P90 BE90S4**	439
3.6	2660	1.1	399.3	20000	**F604_399.3 S3 ME3SA4**	434	**F604_399.3 P90 BE90S4**	435
3.7	2552	3.1	383.2	45000	**F804_383.2 S3 ME3SA4**	441	**F804_383.2 P90 BE90S4**	442
3.8	2481	2.0	372.5	35000	**F704_372.5 S3 ME3SA4**	438	**F704_372.5 P90 BE90S4**	439
4.0	2356	3.4	353.7	45000	**F804_353.7 S3 ME3SA4**	441	**F804_353.7 P90 BE90S4**	442
4.2	2276	1.3	341.7	20000	**F604_341.7 S3 ME3SA4**	434	**F604_341.7 P90 BE90S4**	435
4.5	2100	1.4	315.4	20000	**F604_315.4 S3 ME3SA4**	434	**F604_315.4 P90 BE90S4**	435
4.7	2027	2.5	304.3	35000	**F704_304.3 S3 ME3SA4**	438	**F704_304.3 P90 BE90S4**	439
5.0	1968	0.9	285.9	12000	**F513_285.9 S3 ME3SA4**	430	**F513_285.9 P90 BE90S4**	431
5.1	1871	2.7	280.9	35000	**F704_280.9 S3 ME3SA4**	438	**F704_280.9 P90 BE90S4**	439
5.1	1932	1.5	280.7	20000	**F603_280.7 S3 ME3SA4**	434	**F603_280.7 P90 BE90S4**	435
5.5	1804	1.0	262.1	12000	**F513_262.1 S3 ME3SA4**	430	**F513_262.1 P90 BE90S4**	431
5.5	1783	1.6	259.1	20000	**F603_259.1 S3 ME3SA4**	434	**F603_259.1 P90 BE90S4**	435
6.0	1651	1.1	239.8	12000	**F513_239.8 S3 ME3SA4**	430	**F513_239.8 P90 BE90S4**	431
6.1	1623	1.8	235.8	20000	**F603_235.8 S3 ME3SA4**	434	**F603_235.8 P90 BE90S4**	435
6.1	1562	3.2	234.6	35000	**F704_234.6 S3 ME3SA4**	438	**F704_234.6 P90 BE90S4**	439
6.6	1498	1.9	217.6	20000	**F603_217.6 S3 ME3SA4**	434	**F603_217.6 P90 BE90S4**	435
6.6	1492	1.2	216.9	12000	**F513_216.9 S3 ME3SA4**	430	**F513_216.9 P90 BE90S4**	431
6.6	1442	3.5	216.5	35000	**F704_216.5 S3 ME3SA4**	438	**F704_216.5 P90 BE90S4**	439
7.1	1393	1.3	202.4	12000	**F513_202.4 S3 ME3SA4**	430	**F513_202.4 P90 BE90S4**	431

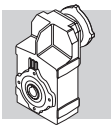

1.1 kW

n_2 min-1	M_2 Nm	S	i	R_{n2} N	IE2		IEC IE2	
7.1	1386	2.1	201.4	20000	**F603_201.4 S3 ME3SA4**	434	**F603_201.4 P90 BE90S4**	435
7.7	1279	2.3	185.9	20000	**F603_185.9 S3 ME3SA4**	434	**F603_185.9 P90 BE90S4**	435
7.9	1244	0.9	180.7	8500	**F413_180.7 S3 ME3SA4**	426	**F413_180.7 P90 BE90S4**	427
8.5	1161	0.9	168.7	8500	**F413_168.7 S3 ME3SA4**	426	**F413_168.7 P90 BE90S4**	427
8.6	1140	1.6	165.6	12000	**F513_165.6 S3 ME3SA4**	430	**F513_165.6 P90 BE90S4**	431
8.8	1121	2.6	162.9	20000	**F603_162.9 S3 ME3SA4**	434	**F603_162.9 P90 BE90S4**	435
9.5	1035	2.8	150.4	20000	**F603_150.4 S3 ME3SA4**	434	**F603_150.4 P90 BE90S4**	435
10.6	925	1.2	134.4	8500	**F413_134.4 S3 ME3SA4**	426	**F413_134.4 P90 BE90S4**	427
11.0	894	2.0	129.9	12000	**F513_129.9 S3 ME3SA4**	430	**F513_129.9 P90 BE90S4**	431
13.5	730	1.5	106.0	8500	**F413_106.0 S3 ME3SA4**	426	**F413_106.0 P90 BE90S4**	427
13.6	723	2.5	105.1	12000	**F513_105.1 S3 ME3SA4**	430	**F513_105.1 P90 BE90S4**	431
16.4	601	1.0	87.4	6500	**F313_87.4 S3 ME3SA4**	422	**F313_87.4 P90 BE90S4**	423
16.8	584	1.9	84.9	8500	**F413_84.9 S3 ME3SA4**	426	**F413_84.9 P90 BE90S4**	427
17.2	573	3.1	83.2	12000	**F513_83.2 S3 ME3SA4**	430	**F513_83.2 P90 BE90S4**	431
18.1	543	1.1	78.9	6500	**F313_78.9 S3 ME3SA4**	422	**F313_78.9 P90 BE90S4**	423
20.7	475	1.3	69.1	6500	**F313_69.1 S3 ME3SA4**	422	**F313_69.1 P90 BE90S4**	423
21.5	458	2.4	66.5	8500	**F413_66.5 S3 ME3SA4**	426	**F413_66.5 P90 BE90S4**	427
21.9	450	0.9	65.3	4610	**F253_65.3 S3 ME3SA4**	418	**F253_65.3 P90 BE90S4**	419
22.8	432	1.4	62.8	6500	**F313_62.8 S3 ME3SA4**	422	**F313_62.8 P90 BE90S4**	423
23.7	415	2.7	60.2	8500	**F413_60.2 S3 ME3SA4**	426	**F413_60.2 P90 BE90S4**	427
24.5	401	1.0	58.3	4500	**F253_58.3 S3 ME3SA4**	418	**F253_58.3 P90 BE90S4**	419
27.5	359	1.7	52.1	6500	**F313_52.1 S3 ME3SA4**	422	**F313_52.1 P90 BE90S4**	423
27.8	354	3.1	51.5	8500	**F413_51.5 S3 ME3SA4**	426	**F413_51.5 P90 BE90S4**	427
28.2	350	1.1	50.8	4450	**F253_50.8 S3 ME3SA4**	418	**F253_50.8 P90 BE90S4**	419
29.8	337	3.2	47.9	8500	**F412_47.9 S3 ME3SA4**	426	**F412_47.9 P90 BE90S4**	427
30	327	1.8	47.5	6500	**F313_47.5 S3 ME3SA4**	422	**F313_47.5 P90 BE90S4**	423
31	314	1.3	45.6	4400	**F253_45.6 S3 ME3SA4**	418	**F253_45.6 P90 BE90S4**	419
32	314	1.9	44.6	6500	**F312_44.6 S3 ME3SA4**	422	**F312_44.6 P90 BE90S4**	423
32	312	1.2	44.4	4470	**F252_44.4 S3 ME3SA4**	418	**F252_44.4 P90 BE90S4**	419
35	286	1.3	40.7	4410	**F252_40.7 S3 ME3SA4**	418	**F252_40.7 P90 BE90S4**	419
35	284	2.1	40.4	6500	**F312_40.4 S3 ME3SA4**	422	**F312_40.4 P90 BE90S4**	423
38	266	0.9	37.9	3050	**F202_37.9 S3 ME3SA4**	414	**F202_37.9 P90 BE90S4**	415
38	265	2.3	37.7	6500	**F312_37.7 S3 ME3SA4**	422	**F312_37.7 P90 BE90S4**	423
39	256	1.6	36.4	4330	**F252_36.4 S3 ME3SA4**	418	**F252_36.4 P90 BE90S4**	419
42	242	2.5	34.4	6500	**F312_34.4 S3 ME3SA4**	422	**F312_34.4 P90 BE90S4**	423
43	233	1.1	33.1	2980	**F202_33.1 S3 ME3SA4**	414	**F202_33.1 P90 BE90S4**	415
44	226	1.8	32.2	4240	**F252_32.2 S3 ME3SA4**	418	**F252_32.2 P90 BE90S4**	419
47	214	1.2	30.4	2930	**F202_30.4 S3 ME3SA4**	414	**F202_30.4 P90 BE90S4**	415
47	212	2.8	30.1	6500	**F312_30.1 S3 ME3SA4**	422	**F312_30.1 P90 BE90S4**	423
48	211	1.9	30.0	4190	**F252_30.0 S3 ME3SA4**	418	**F252_30.0 P90 BE90S4**	419
52	192	3.1	27.3	6500	**F312_27.3 S3 ME3SA4**	422	**F312_27.3 P90 BE90S4**	423
53	191	2.1	27.2	4100	**F252_27.2 S3 ME3SA4**	418	**F252_27.2 P90 BE90S4**	419
55	182	1.3	25.9	2840	**F202_25.9 S3 ME3SA4**	414	**F202_25.9 P90 BE90S4**	415
60	167	2.4	23.8	3990	**F252_23.8 S3 ME3SA4**	418	**F252_23.8 P90 BE90S4**	419
62	163	1.4	23.1	2780	**F202_23.1 S3 ME3SA4**	414	**F202_23.1 P90 BE90S4**	415
66	153	2.6	21.8	3920	**F252_21.8 S3 ME3SA4**	418	**F252_21.8 P90 BE90S4**	419
71	142	1.6	20.2	2690	**F202_20.2 S3 ME3SA4**	414	**F202_20.2 P90 BE90S4**	415
74	136	1.0	19.3	2170	**F102_19.3 S3 ME3SA4**	410	**F102_19.3 P90 BE90S4**	411
77	131	3.1	18.6	3780	**F252_18.6 S3 ME3SA4**	418	**F252_18.6 P90 BE90S4**	419
79	127	1.7	18.1	2620	**F202_18.1 S3 ME3SA4**	414	**F202_18.1 P90 BE90S4**	415
84	119	1.1	17.0	2110	**F102_17.0 S3 ME3SA4**	410	**F102_17.0 P90 BE90S4**	411
86	117	3.4	16.6	3670	**F252_16.6 S3 ME3SA4**	418	**F252_16.6 P90 BE90S4**	419
97	104	2.0	14.8	2500	**F202_14.8 S3 ME3SA4**	414	**F202_14.8 P90 BE90S4**	415
98	103	1.2	14.6	2050	**F102_14.6 S3 ME3SA4**	410	**F102_14.6 P90 BE90S4**	411
110	92	1.1	13.0	1980	**F102_13.0 S3 ME3SA4**	410	**F102_13.0 P90 BE90S4**	411
124	81	1.2	11.5	1920	**F102_11.5 S3 ME3SA4**	410	**F102_11.5 P90 BE90S4**	411
127	79	2.2	11.2	2310	**F202_11.2 S3 ME3SA4**	414	**F202_11.2 P90 BE90S4**	415

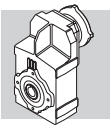

1.1 kW

n_2 min-1	M_2 Nm	S	i	R_{n2} N	IE2		IEC IE2	
143	71	2.3	10.0	2200	**F202_10.0 S3 ME3SA4**	414	**F202_10.0 P90 BE90S4**	415
146	69	1.3	9.8	1840	**F102_9.8 S3 ME3SA4**	410	**F102_9.8 P90 BE90S4**	411
164	61	2.5	8.7	2160	**F202_8.7 S3 ME3SA4**	414	**F202_8.7 P90 BE90S4**	415
167	60	1.4	8.6	1780	**F102_8.6 S3 ME3SA4**	410	**F102_8.6 P90 BE90S4**	411
183	55	2.6	7.8	2100	**F202_7.8 S3 ME3SA4**	414	**F202_7.8 P90 BE90S4**	415
193	52	1.5	7.4	1720	**F102_7.4 S3 ME3SA4**	410	**F102_7.4 P90 BE90S4**	411
223	45	2.9	6.4	1980	**F202_6.4 S3 ME3SA4**	414	**F202_6.4 P90 BE90S4**	415
245	41	1.9	11.5	1600	**F102_11.5S2ME2SB2**	410	**F102_11.5 P90 BE90B2**	411
252	40	3.6	11.2	1910	**F202_11.2S2ME2SB2**	414	**F202_11.2 P90 BE90B2**	415
290	34	2.1	9.8	1530	**F102_9.8S2ME2SB2**	410	**F102_9.8 P90 BE90B2**	411
330	30	2.2	8.6	1480	**F102_8.6S2ME2SB2**	410	**F102_8.6 P90 BE90B2**	411
382	26	2.4	7.4	1410	**F102_7.4S2ME2SB2**	410	**F102_7.4 P90 BE90B2**	411

1.5 kW

n_2 min-1	M_2 Nm	S	i	R_{n2} N	IE2		IEC IE2	
0.8	15321	0.9	1702.3	55000	**F904_1702 S3 ME3SB4**	444	**F904_1702 P90 BE90LA4**	445
0.9	14142	1.0	1571.4	55000	**F904_1571 S3 ME3SB4**	444	**F904_1571 P90 BE90LA4**	445
1.0	12851	1.1	1427.9	55000	**F904_1428 S3 ME3SB4**	444	**F904_1428 P90 BE90LA4**	445
1.1	11863	1.2	1318.1	55000	**F904_1318 S3 ME3SB4**	444	**F904_1318 P90 BE90LA4**	445
1.2	10845	1.3	1204.9	55000	**F904_1205 S3 ME3SB4**	444	**F904_1205 P90 BE90LA4**	445
1.3	10010	1.4	1112.3	55000	**F904_1112 S3 ME3SB4**	444	**F904_1112 P90 BE90LA4**	445
1.5	8874	1.6	986.0	55000	**F904_986.0 S3 ME3SB4**	444	**F904_986.0 P90 BE90LA4**	445
1.5	8748	0.9	972.0	45000	**F804_972.0 S3 ME3SB4**	441	**F804_972.0 P90 BE90LA4**	442
1.6	8192	1.7	910.2	55000	**F904_910.2 S3 ME3SB4**	444	**F904_910.2 P90 BE90LA4**	445
1.6	8075	1.0	897.3	45000	**F804_897.3 S3 ME3SB4**	441	**F804_897.3 P90 BE90LA4**	442
1.8	6970	1.1	774.4	45000	**F804_774.4 S3 ME3SB4**	441	**F804_774.4 P90 BE90LA4**	442
1.8	6961	2.0	773.4	55000	**F904_773.4 S3 ME3SB4**	444	**F904_773.4 P90 BE90LA4**	445
2.0	6434	1.2	714.9	45000	**F804_714.9 S3 ME3SB4**	441	**F804_714.9 P90 BE90LA4**	442
2.0	6426	2.2	714.0	55000	**F904_714.0 S3 ME3SB4**	444	**F904_714.0 P90 BE90LA4**	445
2.3	5631	2.5	625.6	55000	**F904_625.6 S3 ME3SB4**	444	**F904_625.6 P90 BE90LA4**	445
2.3	5498	1.5	610.9	45000	**F804_610.9 S3 ME3SB4**	441	**F804_610.9 P90 BE90LA4**	442
2.4	5462	0.9	606.8	35000	**F704_606.8 S3 ME3SB4**	438	**F704_606.8 P90 BE90LA4**	439
2.5	5197	2.7	577.5	55000	**F904_577.5 S3 ME3SB4**	444	**F904_577.5 P90 BE90LA4**	445
2.5	5075	1.6	563.9	45000	**F804_563.9 S3 ME3SB4**	441	**F804_563.9 P90 BE90LA4**	442
2.8	4594	1.1	510.4	35000	**F704_510.4 S3 ME3SB4**	438	**F704_510.4 P90 BE90LA4**	439
2.9	4460	3.1	495.6	55000	**F904_495.6 S3 ME3SB4**	444	**F904_495.6 P90 BE90LA4**	445
2.9	4402	1.8	489.1	45000	**F804_489.1 S3 ME3SB4**	441	**F804_489.1 P90 BE90LA4**	442
3.0	4240	1.2	471.2	35000	**F704_471.2 S3 ME3SB4**	438	**F704_471.2 P90 BE90LA4**	439
3.1	4117	3.4	457.5	55000	**F904_457.5 S3 ME3SB4**	444	**F904_457.5 P90 BE90LA4**	445
3.2	4063	2.0	451.5	45000	**F804_451.5 S3 ME3SB4**	441	**F804_451.5 P90 BE90LA4**	442
3.5	3632	1.4	403.5	35000	**F704_403.5 S3 ME3SB4**	438	**F704_403.5 P90 BE90LA4**	439
3.7	3448	2.3	383.2	45000	**F804_383.2 S3 ME3SB4**	441	**F804_383.2 P90 BE90LA4**	442
3.8	3352	1.5	372.5	35000	**F704_372.5 S3 ME3SB4**	438	**F704_372.5 P90 BE90LA4**	439
4.0	3183	2.5	353.7	45000	**F804_353.7 S3 ME3SB4**	441	**F804_353.7 P90 BE90LA4**	442
4.2	3075	0.9	341.7	20000	**F604_341.7 S3 ME3SB4**	434	**F604_341.7 P90 BE90LA4**	435
4.5	2839	1.0	315.4	20000	**F604_315.4 S3 ME3SB4**	434	**F604_315.4 P90 BE90LA4**	435
4.7	2739	1.8	304.3	35000	**F704_304.3 S3 ME3SB4**	438	**F704_304.3 P90 BE90LA4**	439
4.8	2670	3.0	296.7	45000	**F804_296.7 S3 ME3SB4**	441	**F804_296.7 P90 BE90LA4**	442
5.1	2528	2.0	280.9	35000	**F704_280.9 S3 ME3SB4**	438	**F704_280.9 P90 BE90LA4**	439
5.1	2610	1.1	280.7	20000	**F603_280.7 S3 ME3SB4**	434	**F603_280.7 P90 BE90LA4**	435
5.2	2465	3.2	273.9	45000	**F804_273.9 S3 ME3SB4**	441	**F804_273.9 P90 BE90LA4**	442
5.5	2409	1.2	259.1	20000	**F603_259.1 S3 ME3SB4**	434	**F603_259.1 P90 BE90LA4**	435

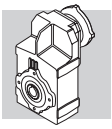

1.5 kW

n_2 min-1	M_2 Nm	S	i	R_{n2} N	IE2		IEC IE2	
6.1	2193	1.3	235.8	20000	**F603_235.8 S3 ME3SB4**	434	**F603_235.8 P90 BE90LA4**	435
6.1	2111	2.4	234.6	35000	**F704_234.6 S3 ME3SB4**	438	**F704_234.6 P90 BE90LA4**	439
6.6	2024	1.4	217.6	20000	**F603_217.6 S3 ME3SB4**	434	**F603_217.6 P90 BE90LA4**	435
6.6	1949	2.6	216.5	35000	**F704_216.5 S3 ME3SB4**	438	**F704_216.5 P90 BE90LA4**	439
7.1	1882	1.0	202.4	12000	**F513_202.4 S3 ME3SB4**	430	**F513_202.4 P90 BE90LA4**	431
7.1	1873	1.5	201.4	20000	**F603_201.4 S3 ME3SB4**	434	**F603_201.4 P90 BE90LA4**	435
7.3	1823	2.7	196.0	35000	**F703_196.0 S3 ME3SB4**	438	**F703_196.0 P90 BE90LA4**	439
7.7	1729	1.7	185.9	20000	**F603_185.9 S3 ME3SB4**	434	**F603_185.9 P90 BE90LA4**	435
7.9	1683	3.0	180.9	35000	**F703_180.9 S3 ME3SB4**	438	**F703_180.9 P90 BE90LA4**	439
8.6	1550	3.2	166.7	35000	**F703_166.7 S3 ME3SB4**	438	**F703_166.7 P90 BE90LA4**	439
8.6	1540	1.2	165.6	12000	**F513_165.6 S3 ME3SB4**	430	**F513_165.6 P90 BE90LA4**	431
8.8	1515	1.9	162.9	20000	**F603_162.9 S3 ME3SB4**	434	**F603_162.9 P90 BE90LA4**	435
9.3	1431	3.5	153.8	35000	**F703_153.8 S3 ME3SB4**	438	**F703_153.8 P90 BE90LA4**	439
9.5	1398	2.1	150.4	20000	**F603_150.4 S3 ME3SB4**	434	**F603_150.4 P90 BE90LA4**	435
10.6	1250	0.9	134.4	8500	**F413_134.4 S3 ME3SB4**	426	**F413_134.4 P90 BE90LA4**	427
11.0	1214	2.4	130.5	20000	**F603_130.5 S3 ME3SB4**	434	**F603_130.5 P90 BE90LA4**	435
11.0	1208	1.5	129.9	12000	**F513_129.9 S3 ME3SB4**	430	**F513_129.9 P90 BE90LA4**	431
11.9	1120	2.6	120.5	20000	**F603_120.5 S3 ME3SB4**	434	**F603_120.5 P90 BE90LA4**	435
13.4	989	2.9	106.4	20000	**F603_106.4 S3 ME3SB4**	434	**F603_106.4 P90 BE90LA4**	435
13.5	986	1.1	106.0	8500	**F413_106.0 S3 ME3SB4**	426	**F413_106.0 P90 BE90LA4**	427
13.6	977	1.8	105.1	12000	**F513_105.1 S3 ME3SB4**	430	**F513_105.1 P90 BE90LA4**	431
14.6	913	3.2	98.2	20000	**F603_98.2 S3 ME3SB4**	434	**F603_98.2 P90 BE90LA4**	435
16.8	789	1.4	84.9	8500	**F413_84.9 S3 ME3SB4**	426	**F413_84.9 P90 BE90LA4**	427
17.2	774	2.3	83.2	12000	**F513_83.2 S3 ME3SB4**	430	**F513_83.2 P90 BE90LA4**	431
20.7	642	0.9	69.1	6500	**F313_69.1 S3 ME3SB4**	422	**F313_69.1 P90 BE90LA4**	423
21.5	618	1.8	66.5	8500	**F413_66.5 S3 ME3SB4**	426	**F413_66.5 P90 BE90LA4**	427
21.7	612	2.9	65.8	12000	**F513_65.8 S3 ME3SB4**	430	**F513_65.8 P90 BE90LA4**	431
22.8	584	1.0	62.8	6500	**F313_62.8 S3 ME3SB4**	422	**F313_62.8 P90 BE90LA4**	423
23.7	560	2.0	60.2	8500	**F413_60.2 S3 ME3SB4**	426	**F413_60.2 P90 BE90LA4**	427
27.5	484	1.2	52.1	6500	**F313_52.1 S3 ME3SB4**	422	**F313_52.1 P90 BE90LA4**	423
27.8	479	2.3	51.5	8500	**F413_51.5 S3 ME3SB4**	426	**F413_51.5 P90 BE90LA4**	427
29.8	455	2.4	47.9	8500	**F412_47.9 S3 ME3SB4**	426	**F412_47.9 P90 BE90LA4**	427
30	442	1.3	47.5	6500	**F313_47.5 S3 ME3SB4**	422	**F313_47.5 P90 BE90LA4**	423
31	424	0.9	45.6	3880	**F253_45.6 S3 ME3SB4**	418	**F253_45.6 P90 BE90LA4**	419
32	424	1.4	44.6	6500	**F312_44.6 S3 ME3SB4**	422	**F312_44.6 P90 BE90LA4**	423
32	422	0.9	44.4	4180	**F252_44.4 S3 ME3SB4**	418	**F252_44.4 P90 BE90LA4**	419
35	387	1.0	40.7	3970	**F252_40.7 S3 ME3SB4**	418	**F252_40.7 P90 BE90LA4**	419
35	383	1.6	40.4	6500	**F312_40.4 S3 ME3SB4**	422	**F312_40.4 P90 BE90LA4**	423
37	363	3.0	38.2	8500	**F412_38.2 S3 ME3SB4**	426	**F412_38.2 P90 BE90LA4**	427
38	358	1.7	37.7	6500	**F312_37.7 S3 ME3SB4**	422	**F312_37.7 P90 BE90LA4**	423
39	346	1.2	36.4	3940	**F252_36.4 S3 ME3SB4**	418	**F252_36.4 P90 BE90LA4**	419
42	326	1.8	34.4	6500	**F312_34.4 S3 ME3SB4**	422	**F312_34.4 P90 BE90LA4**	423
44	306	1.3	32.2	3890	**F252_32.2 S3 ME3SB4**	418	**F252_32.2 P90 BE90LA4**	419
47	286	2.1	30.1	6500	**F312_30.1 S3 ME3SB4**	422	**F312_30.1 P90 BE90LA4**	423
48	285	1.4	30.0	3860	**F252_30.0 S3 ME3SB4**	418	**F252_30.0 P90 BE90LA4**	419
52	259	2.3	27.3	6500	**F312_27.3 S3 ME3SB4**	422	**F312_27.3 P90 BE90LA4**	423
53	258	1.5	27.2	3810	**F252_27.2 S3 ME3SB4**	418	**F252_27.2 P90 BE90LA4**	419
55	246	1.0	25.9	2640	**F202_25.9 S3 ME3SB4**	414	**F202_25.9 P90 BE90LA4**	415
60	226	1.8	23.8	3730	**F252_23.8 S3 ME3SB4**	418	**F252_23.8 P90 BE90LA4**	419
61	222	2.7	23.4	6480	**F312_23.4 S3 ME3SB4**	422	**F312_23.4 P90 BE90LA4**	423
62	220	1.1	23.1	2600	**F202_23.1 S3 ME3SB4**	414	**F202_23.1 P90 BE90LA4**	415
66	207	1.9	21.8	3680	**F252_21.8 S3 ME3SB4**	418	**F252_21.8 P90 BE90LA4**	419
68	201	3.0	21.1	6320	**F312_21.1 S3 ME3SB4**	422	**F312_21.1 P90 BE90LA4**	423
71	191	1.2	20.2	2530	**F202_20.2 S3 ME3SB4**	414	**F202_20.2 P90 BE90LA4**	415
77	177	2.3	18.6	3570	**F252_18.6 S3 ME3SB4**	418	**F252_18.6 P90 BE90LA4**	419
77	176	3.4	18.5	6110	**F312_18.5 S3 ME3SB4**	422	**F312_18.5 P90 BE90LA4**	423
79	172	1.2	18.1	2480	**F202_18.1 S3 ME3SB4**	414	**F202_18.1 P90 BE90LA4**	415

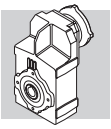

1.5 kW

n_2 min-1	M_2 Nm	S	i	R_{n2} N	IE2		IEC IE2	
86	158	2.5	16.6	3490	**F252_16.6 S3 ME3SB4**	418	**F252_16.6 P90 BE90LA4**	419
97	141	1.4	14.8	2380	**F202_14.8 S3 ME3SB4**	414	**F202_14.8 P90 BE90LA4**	415
99	137	2.9	14.5	3390	**F252_14.5 S3 ME3SB4**	418	**F252_14.5 P90 BE90LA4**	419
110	123	3.2	13.0	3310	**F252_13.0 S3 ME3SB4**	418	**F252_13.0 P90 BE90LA4**	419
124	110	0.9	11.5	1160	**F102_11.5 S3 ME3SB4**	410	**F102_11.5 P90 BE90LA4**	411
127	107	1.7	11.2	2220	**F202_11.2 S3 ME3SB4**	414	**F202_11.2 P90 BE90LA4**	415
143	95	1.7	10.0	2160	**F202_10.0 S3 ME3SB4**	414	**F202_10.0 P90 BE90LA4**	415
146	93	1.0	9.8	1760	**F102_9.8 S3 ME3SB4**	410	**F102_9.8 P90 BE90LA4**	411
153	89	3.0	9.4	3070	**F252_9.4 S3 ME3SB4**	418	**F252_9.4 P90 BE90LA4**	419
164	83	1.9	8.7	2090	**F202_8.7 S3 ME3SB4**	414	**F202_8.7 P90 BE90LA4**	415
167	82	1.0	8.6	1710	**F102_8.6 S3 ME3SB4**	410	**F102_8.6 P90 BE90LA4**	411
170	80	3.3	8.4	2980	**F252_8.4 S3 ME3SB4**	418	**F252_8.4 P90 BE90LA4**	419
183	74	1.9	7.8	2030	**F202_7.8 S3 ME3SB4**	414	**F202_7.8 P90 BE90LA4**	415
193	70	1.1	7.4	1650	**F102_7.4 S3 ME3SB4**	410	**F102_7.4 P90 BE90LA4**	411
223	61	2.1	6.4	1930	**F202_6.4 S3 ME3SB4**	414	**F202_6.4 P90 BE90LA4**	415
247	55	1.4	11.5	1560	**F102_11.5 S3 ME3SA2**	410	**F102_11.5 P90 BE90SA2**	411
254	54	2.6	11.2	1860	**F202_11.2 S3 ME3SA2**	414	**F202_11.2 P90 BE90SA2**	415
292	47	1.6	9.8	1490	**F102_9.8 S3 ME3SA2**	410	**F102_9.8 P90 BE90SA2**	411
327	42	3.0	8.7	1740	**F202_8.7 S3 ME3SA2**	414	**F202_8.7 P90 BE90SA2**	415
333	41	1.6	8.6	1440	**F102_8.6 S3 ME3SA2**	410	**F102_8.6 P90 BE90SA2**	411
364	37	3.1	7.8	1680	**F202_7.8 S3 ME3SA2**	414	**F202_7.8 P90 BE90SA2**	415
386	35	1.8	7.4	1380	**F102_7.4 S3 ME3SA2**	410	**F102_7.4 P90 BE90SA2**	411
445	31	3.4	6.4	1590	**F202_6.4 S3 ME3SA2**	414	**F202_6.4 P90 BE90SA2**	415

2.2 kW

n_2 min-1	M_2 Nm	S	i	R_{n2} N	IE2		IEC IE2	
1.2	15941	0.9	1204.9	55000	**F904_1205 S3 ME3LA4**	444	**F904_1205 P100 BE100LA4**	445
1.3	14715	1.0	1112.3	55000	**F904_1112 S3 ME3LA4**	444	**F904_1112 P100 BE100LA4**	445
1.5	13045	1.1	986.0	55000	**F904_986.0 S3 ME3LA4**	444	**F904_986.0 P100 BE100LA4**	445
1.6	12042	1.2	910.2	55000	**F904_910.2 S3 ME3LA4**	444	**F904_910.2 P100 BE100LA4**	445
1.8	10233	1.4	773.4	55000	**F904_773.4 S3 ME3LA4**	444	**F904_773.4 P100 BE100LA4**	445
2.0	9446	1.5	714.0	55000	**F904_714.0 S3 ME3LA4**	444	**F904_714.0 P100 BE100LA4**	445
2.3	8277	1.7	625.6	55000	**F904_625.6 S3 ME3LA4**	444	**F904_625.6 P100 BE100LA4**	445
2.3	8082	1.0	610.9	45000	**F804_610.9 S3 ME3LA4**	441	**F804_610.9 P100 BE100LA4**	442
2.5	7640	1.8	577.5	55000	**F904_577.5 S3 ME3LA4**	444	**F904_577.5 P100 BE100LA4**	445
2.5	7460	1.1	563.9	45000	**F804_563.9 S3 ME3LA4**	441	**F804_563.9 P100 BE100LA4**	442
2.9	6556	2.1	495.6	55000	**F904_495.6 S3 ME3LA4**	444	**F904_495.6 P100 BE100LA4**	445
2.9	6471	1.2	489.1	45000	**F804_489.1 S3 ME3LA4**	441	**F804_489.1 P100 BE100LA4**	442
3.1	6052	2.3	457.5	55000	**F904_457.5 S3 ME3LA4**	444	**F904_457.5 P100 BE100LA4**	445
3.2	5973	1.3	451.5	45000	**F804_451.5 S3 ME3LA4**	441	**F804_451.5 P100 BE100LA4**	442
3.5	5338	0.9	403.5	35000	**F704_403.5 S3 ME3LA4**	438	**F704_403.5 P100 BE100LA4**	439
3.6	5186	2.7	392.0	55000	**F904_392.0 S3 ME3LA4**	444	**F904_392.0 P100 BE100LA4**	445
3.7	5069	1.6	383.2	45000	**F804_383.2 S3 ME3LA4**	441	**F804_383.2 P100 BE100LA4**	442
3.8	4928	1.0	372.5	35000	**F704_372.5 S3 ME3LA4**	438	**F704_372.5 P100 BE100LA4**	439
4.0	4787	2.9	361.8	55000	**F904_361.8 S3 ME3LA4**	444	**F904_361.8 P100 BE100LA4**	445
4.0	4679	1.7	353.7	45000	**F804_353.7 S3 ME3LA4**	441	**F804_353.7 P100 BE100LA4**	442
4.7	4027	1.2	304.3	35000	**F704_304.3 S3 ME3LA4**	438	**F704_304.3 P100 BE100LA4**	439
4.8	3926	2.0	296.7	45000	**F804_296.7 S3 ME3LA4**	441	**F804_296.7 P100 BE100LA4**	442
4.9	3852	3.6	291.1	55000	**F904_291.1 S3 ME3LA4**	444	**F904_291.1 P100 BE100LA4**	445
5.1	3717	1.3	280.9	35000	**F704_280.9 S3 ME3LA4**	438	**F704_280.9 P100 BE100LA4**	439
5.2	3624	2.2	273.9	45000	**F804_273.9 S3 ME3LA4**	441	**F804_273.9 P100 BE100LA4**	442
6.1	3223	0.9	235.8	20000	**F603_235.8 S3 ME3LA4**	434	**F603_235.8 P100 BE100LA4**	435

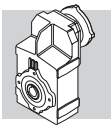

2.2 kW

n_2 min-1	M_2 Nm	S	i	R_{n2} N	IE2		IEC IE2	
6.1	3103	1.6	234.6	35000	**F704_234.6 S3 ME3LA4**	438	**F704_234.6 P100 BE100LA4**	439
6.5	2891	2.8	218.5	45000	**F804_218.5 S3 ME3LA4**	441	**F804_218.5 P100 BE100LA4**	442
6.6	2975	1.0	217.6	20000	**F603_217.6 S3 ME3LA4**	434	**F603_217.6 P100 BE100LA4**	435
6.6	2865	1.7	216.5	35000	**F704_216.5 S3 ME3LA4**	438	**F704_216.5 P100 BE100LA4**	439
7.1	2753	1.1	201.4	20000	**F603_201.4 S3 ME3LA4**	434	**F603_201.4 P100 BE100LA4**	435
7.2	2734	2.9	200.0	45000	**F803_200.0 S3 ME3LA4**	441	**F803_200.0 P100 BE100LA4**	442
7.3	2680	1.9	196.0	35000	**F703_196.0 S3 ME3LA4**	438	**F703_196.0 P100 BE100LA4**	439
7.7	2541	1.1	185.9	20000	**F603_185.9 S3 ME3LA4**	434	**F603_185.9 P100 BE100LA4**	435
7.7	2524	3.2	184.6	45000	**F803_184.6 S3 ME3LA4**	441	**F803_184.6 P100 BE100LA4**	442
7.9	2474	2.0	180.9	35000	**F703_180.9 S3 ME3LA4**	438	**F703_180.9 P100 BE100LA4**	439
8.6	2279	2.2	166.7	35000	**F703_166.7 S3 ME3LA4**	438	**F703_166.7 P100 BE100LA4**	439
8.8	2227	1.3	162.9	20000	**F603_162.9 S3 ME3LA4**	434	**F603_162.9 P100 BE100LA4**	435
9.3	2103	2.4	153.8	35000	**F703_153.8 S3 ME3LA4**	438	**F703_153.8 P100 BE100LA4**	439
9.5	2056	1.4	150.4	20000	**F603_150.4 S3 ME3LA4**	434	**F603_150.4 P100 BE100LA4**	435
10.8	1818	2.8	133.0	35000	**F703_133.0 S3 ME3LA4**	438	**F703_133.0 P100 BE100LA4**	439
11.0	1784	1.6	130.5	20000	**F603_130.5 S3 ME3LA4**	434	**F603_130.5 P100 BE100LA4**	435
11.0	1776	1.0	129.9	12000	**F513_129.9 S3 ME3LA4**	430	**F513_129.9 P100 BE100LA4**	431
11.7	1678	3.0	122.7	35000	**F703_122.7 S3 ME3LA4**	438	**F703_122.7 P100 BE100LA4**	439
11.9	1647	1.8	120.5	20000	**F603_120.5 S3 ME3LA4**	434	**F603_120.5 P100 BE100LA4**	435
13.0	1499	3.3	109.6	35000	**F703_109.6 S3 ME3LA4**	438	**F703_109.6 P100 BE100LA4**	439
13.4	1454	2.0	106.4	20000	**F603_106.4 S3 ME3LA4**	434	**F603_106.4 P100 BE100LA4**	435
13.6	1437	1.3	105.1	12000	**F513_105.1 S3 ME3LA4**	430	**F513_105.1 P100 BE100LA4**	431
14.1	1383	3.6	101.2	35000	**F703_101.2 S3 ME3LA4**	438	**F703_101.2 P100 BE100LA4**	439
14.6	1342	2.2	98.2	20000	**F603_98.2 S3 ME3LA4**	434	**F603_98.2 P100 BE100LA4**	435
16.8	1160	0.9	84.9	8500	**F413_84.9 S3 ME3LA4**	426	**F413_84.9 P100 BE100LA4**	427
17.0	1149	2.5	84.0	20000	**F603_84.0 S3 ME3LA4**	434	**F603_84.0 P100 BE100LA4**	435
17.2	1138	1.6	83.2	12000	**F513_83.2 S3 ME3LA4**	430	**F513_83.2 P100 BE100LA4**	431
18.4	1060	2.7	77.6	20000	**F603_77.6 S3 ME3LA4**	434	**F603_77.6 P100 BE100LA4**	435
20.9	933	3.1	68.3	20000	**F603_68.3 S3 ME3LA4**	434	**F603_68.3 P100 BE100LA4**	435
21.5	909	1.2	66.5	8500	**F413_66.5 S3 ME3LA4**	426	**F413_66.5 P100 BE100LA4**	427
21.7	900	2.0	65.8	12000	**F513_65.8 S3 ME3LA4**	430	**F513_65.8 P100 BE100LA4**	431
22.7	862	3.4	63.0	20000	**F603_63.0 S3 ME3LA4**	434	**F603_63.0 P100 BE100LA4**	435
23.7	824	1.3	60.2	8500	**F413_60.2 S3 ME3LA4**	426	**F413_60.2 P100 BE100LA4**	427
27.8	704	1.5	51.5	8500	**F413_51.5 S3 ME3LA4**	426	**F413_51.5 P100 BE100LA4**	427
29.2	669	2.7	48.9	12000	**F513_48.9 S3 ME3LA4**	430	**F513_48.9 P100 BE100LA4**	431
29.8	669	1.6	47.9	8500	**F412_47.9 S3 ME3LA4**	426	**F412_47.9 P100 BE100LA4**	427
30	650	0.9	47.5	6500	**F313_47.5 S3 ME3LA4**	422	**F313_47.5 P100 BE100LA4**	423
32	623	1.0	44.6	6500	**F312_44.6 S3 ME3LA4**	422	**F312_44.6 P100 BE100LA4**	423
35	564	1.1	40.4	6500	**F312_40.4 S3 ME3LA4**	422	**F312_40.4 P100 BE100LA4**	423
37	533	2.1	38.2	8500	**F412_38.2 S3 ME3LA4**	426	**F412_38.2 P100 BE100LA4**	427
38	526	1.1	37.7	6500	**F312_37.7 S3 ME3LA4**	422	**F312_37.7 P100 BE100LA4**	423
39	519	3.3	37.1	12000	**F512_37.1 S3 ME3LA4**	430	**F512_37.1 P100 BE100LA4**	431
42	480	1.3	34.4	6490	**F312_34.4 S3 ME3LA4**	422	**F312_34.4 P100 BE100LA4**	423
44	449	0.9	32.2	3620	**F252_32.2 S3 ME3LA4**	418	**F252_32.2 P100 BE100LA4**	419
47	421	1.4	30.1	6360	**F312_30.1 S3 ME3LA4**	422	**F312_30.1 P100 BE100LA4**	423
47	421	2.6	30.1	8500	**F412_30.1 S3 ME3LA4**	426	**F412_30.1 P100 BE100LA4**	427
48	419	1.0	30.0	3300	**F252_30.0 S3 ME3LA4**	418	**F252_30.0 P100 BE100LA4**	419
52	381	1.6	27.3	6250	**F312_27.3 S3 ME3LA4**	422	**F312_27.3 P100 BE100LA4**	423
53	380	1.1	27.2	3300	**F252_27.2 S3 ME3LA4**	418	**F252_27.2 P100 BE100LA4**	419
59	337	3.3	24.1	8400	**F412_24.1 S3 ME3LA4**	426	**F412_24.1 P100 BE100LA4**	427
60	332	1.2	23.8	3290	**F252_23.8 S3 ME3LA4**	418	**F252_23.8 P100 BE100LA4**	419
61	327	1.8	23.4	6080	**F312_23.4 S3 ME3LA4**	422	**F312_23.4 P100 BE100LA4**	423
66	305	1.3	21.8	3270	**F252_21.8 S3 ME3LA4**	418	**F252_21.8 P100 BE100LA4**	419
68	295	2.0	21.1	5960	**F312_21.1 S3 ME3LA4**	422	**F312_21.1 P100 BE100LA4**	423
77	260	1.5	18.6	3220	**F252_18.6 S3 ME3LA4**	418	**F252_18.6 P100 BE100LA4**	419
77	258	2.3	18.5	5790	**F312_18.5 S3 ME3LA4**	422	**F312_18.5 P100 BE100LA4**	423
85	235	2.6	16.8	5670	**F312_16.8 S3 ME3LA4**	422	**F312_16.8 P100 BE100LA4**	423

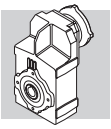

2.2 kW

n_2 min-1	M_2 Nm	S	i	R_{n2} N	IE2		IEC IE2	
86	232	1.7	16.6	3180	**F252_16.6 S3 ME3LA4**	418	**F252_16.6 P100 BE100LA4**	419
97	207	1.0	14.8	2190	**F202_14.8 S3 ME3LA4**	414	**F202_14.8 P100 BE100LA4**	415
99	202	2.0	14.5	3120	**F252_14.5 S3 ME3LA4**	418	**F252_14.5 P100 BE100LA4**	419
103	195	3.1	13.9	5430	**F312_13.9 S3 ME3LA4**	422	**F312_13.9 P100 BE100LA4**	423
110	181	2.2	13.0	3070	**F252_13.0 S3 ME3LA4**	418	**F252_13.0 P100 BE100LA4**	419
112	178	3.4	12.7	5310	**F312_12.7 S3 ME3LA4**	422	**F312_12.7 P100 BE100LA4**	423
127	157	1.1	11.2	2060	**F202_11.2 S3 ME3LA4**	414	**F202_11.2 P100 BE100LA4**	415
135	148	2.7	10.6	2960	**F252_10.6 S3 ME3LA4**	418	**F252_10.6 P100 BE100LA4**	419
143	140	1.2	10.0	2000	**F202_10.0 S3 ME3LA4**	414	**F202_10.0 P100 BE100LA4**	415
153	131	2.0	9.4	2900	**F252_9.4 S3 ME3LA4**	418	**F252_9.4 P100 BE100LA4**	419
159	126	3.1	9.0	4830	**F312_9.0 S3 ME3LA4**	422	**F312_9.0 P100 BE100LA4**	423
164	122	1.3	8.7	1960	**F202_8.7 S3 ME3LA4**	414	**F202_8.7 P100 BE100LA4**	415
170	117	2.2	8.4	2830	**F252_8.4 S3 ME3LA4**	418	**F252_8.4 P100 BE100LA4**	419
174	115	3.4	8.2	4720	**F312_8.2 S3 ME3LA4**	422	**F312_8.2 P100 BE100LA4**	423
183	109	1.3	7.8	1920	**F202_7.8 S3 ME3LA4**	414	**F202_7.8 P100 BE100LA4**	415
208	96	2.7	6.9	2710	**F252_6.9 S3 ME3LA4**	418	**F252_6.9 P100 BE100LA4**	419
223	90	1.5	6.4	1840	**F202_6.4 S3 ME3LA4**	414	**F202_6.4 P100 BE100LA4**	415
248	80	1.0	11.5	1470	**F102_11.5 S3 ME3LA2**	410	**F102_11.5 P90 BE90L2**	411
255	78	1.8	11.2	1780	**F202_11.2 S3 ME3LA2**	414	**F202_11.2 P90 BE90L2**	415
293	68	1.1	9.8	1410	**F102_9.8 S3 ME3LA2**	410	**F102_9.8 P90 BE90L2**	411
328	61	2.0	8.7	1670	**F202_8.7 S3 ME3LA2**	414	**F202_8.7 P90 BE90L2**	415
334	60	1.1	8.6	1370	**F102_8.6 S3 ME3LA2**	410	**F102_8.6 P90 BE90L2**	411
366	55	2.1	7.8	1630	**F202_7.8 S3 ME3LA2**	414	**F202_7.8 P90 BE90L2**	415
387	52	1.2	7.4	1330	**F102_7.4 S3 ME3LA2**	410	**F102_7.4 P90 BE90L2**	411
447	45	2.3	6.4	1540	**F202_6.4 S3 ME3LA2**	414	**F202_6.4 P90 BE90L2**	415

3 kW

n_2 min-1	M_2 Nm	S	i	R_{n2} N	IE2		IEC IE2	
1.9	13922	1.0	773.4	55000	**F904_773.4 S3 ME3LB4**	444	**F904_773.4 P100 BE100LB4**	445
2.0	12851	1.1	714.0	55000	**F904_714.0 S3 ME3LB4**	444	**F904_714.0 P100 BE100LB4**	445
2.3	11261	1.2	625.6	55000	**F904_625.6 S3 ME3LB4**	444	**F904_625.6 P100 BE100LB4**	445
2.5	10395	1.3	577.5	55000	**F904_577.5 S3 ME3LB4**	444	**F904_577.5 P100 BE100LB4**	445
2.9	8920	1.6	495.6	55000	**F904_495.6 S3 ME3LB4**	444	**F904_495.6 P100 BE100LB4**	445
2.9	8804	0.9	489.1	45000	**F804_489.1 S3 ME3LB4**	441	**F804_489.1 P100 BE100LB4**	442
3.1	8234	1.7	457.5	55000	**F904_457.5 S3 ME3LB4**	444	**F904_457.5 P100 BE100LB4**	445
3.2	8127	1.0	451.5	45000	**F804_451.5 S3 ME3LB4**	441	**F804_451.5 P100 BE100LB4**	442
3.7	7056	2.0	392.0	55000	**F904_392.0 S3 ME3LB4**	444	**F904_392.0 P100 BE100LB4**	445
3.8	6897	1.2	383.2	45000	**F804_383.2 S3 ME3LB4**	441	**F804_383.2 P100 BE100LB4**	442
4.0	6513	2.1	361.8	55000	**F904_361.8 S3 ME3LB4**	444	**F904_361.8 P100 BE100LB4**	445
4.1	6366	1.3	353.7	45000	**F804_353.7 S3 ME3LB4**	441	**F804_353.7 P100 BE100LB4**	442
4.7	5478	0.9	304.3	35000	**F704_304.3 S3 ME3LB4**	438	**F704_304.3 P100 BE100LB4**	439
4.9	5341	1.5	296.7	45000	**F804_296.7 S3 ME3LB4**	441	**F804_296.7 P100 BE100LB4**	442
4.9	5240	2.7	291.1	55000	**F904_291.1 S3 ME3LB4**	444	**F904_291.1 P100 BE100LB4**	445
5.1	5057	1.0	280.9	35000	**F704_280.9 S3 ME3LB4**	438	**F704_280.9 P100 BE100LB4**	439
5.3	4930	1.6	273.9	45000	**F804_273.9 S3 ME3LB4**	441	**F804_273.9 P100 BE100LB4**	442
5.4	4837	2.9	268.7	55000	**F904_268.7 S3 ME3LB4**	444	**F904_268.7 P100 BE100LB4**	445
6.1	4222	1.2	234.6	35000	**F704_234.6 S3 ME3LB4**	438	**F704_234.6 P100 BE100LB4**	439
6.2	4165	3.4	231.4	55000	**F904_231.4 S3 ME3LB4**	444	**F904_231.4 P100 BE100LB4**	445
6.6	3933	2.0	218.5	45000	**F804_218.5 S3 ME3LB4**	441	**F804_218.5 P100 BE100LB4**	442
6.7	3897	1.3	216.5	35000	**F704_216.5 S3 ME3LB4**	438	**F704_216.5 P100 BE100LB4**	439
6.7	3845	3.6	213.6	55000	**F904_213.6 S3 ME3LB4**	444	**F904_213.6 P100 BE100LB4**	445
7.2	3720	2.2	200.0	45000	**F803_200.0 S3 ME3LB4**	441	**F803_200.0 P100 BE100LB4**	442
7.3	3646	1.4	196.0	35000	**F703_196.0 S3 ME3LB4**	438	**F703_196.0 P100 BE100LB4**	439
7.8	3434	2.3	184.6	45000	**F803_184.6 S3 ME3LB4**	441	**F803_184.6 P100 BE100LB4**	442
8.0	3366	1.5	180.9	35000	**F703_180.9 S3 ME3LB4**	438	**F703_180.9 P100 BE100LB4**	439

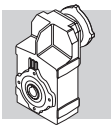

3 kW

n_2 min-1	M_2 Nm	S	i	R_{n2} N	IE2		IEC IE2	
8.6	3100	1.6	166.7	35000	**F703_166.7 S3 ME3LB4**	438	**F703_166.7 P100 BE100LB4**	439
8.8	3030	1.0	162.9	20000	**F603_162.9 S3 ME3LB4**	434	**F603_162.9 P100 BE100LB4**	435
9.0	2980	2.7	160.2	45000	**F803_160.2 S3 ME3LB4**	441	**F803_160.2 P100 BE100LB4**	442
9.4	2862	1.7	153.8	35000	**F703_153.8 S3 ME3LB4**	438	**F703_153.8 P100 BE100LB4**	439
9.6	2797	1.0	150.4	20000	**F603_150.4 S3 ME3LB4**	434	**F603_150.4 P100 BE100LB4**	435
9.7	2751	2.9	147.9	45000	**F803_147.9 S3 ME3LB4**	441	**F803_147.9 P100 BE100LB4**	442
10.8	2473	2.0	133.0	35000	**F703_133.0 S3 ME3LB4**	438	**F703_133.0 P100 BE100LB4**	439
10.9	2468	3.2	132.7	45000	**F803_132.7 S3 ME3LB4**	441	**F803_132.7 P100 BE100LB4**	442
11.0	2427	1.2	130.5	20000	**F603_130.5 S3 ME3LB4**	434	**F603_130.5 P100 BE100LB4**	435
11.7	2283	2.2	122.7	35000	**F703_122.7 S3 ME3LB4**	438	**F703_122.7 P100 BE100LB4**	439
12.0	2240	1.3	120.5	20000	**F603_120.5 S3 ME3LB4**	434	**F603_120.5 P100 BE100LB4**	435
13.1	2039	2.5	109.6	35000	**F703_109.6 S3 ME3LB4**	438	**F703_109.6 P100 BE100LB4**	439
13.5	1979	1.5	106.4	20000	**F603_106.4 S3 ME3LB4**	434	**F603_106.4 P100 BE100LB4**	435
13.7	1955	0.9	105.1	12000	**F513_105.1 S3 ME3LB4**	430	**F513_105.1 P100 BE100LB4**	431
14.2	1882	2.7	101.2	35000	**F703_101.2 S3 ME3LB4**	438	**F703_101.2 P100 BE100LB4**	439
14.7	1826	1.6	98.2	20000	**F603_98.2 S3 ME3LB4**	434	**F603_98.2 P100 BE100LB4**	435
15.6	1721	2.9	92.5	35000	**F703_92.5 S3 ME3LB4**	438	**F703_92.5 P100 BE100LB4**	439
16.9	1588	3.1	85.4	35000	**F703_85.4 S3 ME3LB4**	438	**F703_85.4 P100 BE100LB4**	439
17.1	1563	1.9	84.0	20000	**F603_84.0 S3 ME3LB4**	434	**F603_84.0 P100 BE100LB4**	435
17.3	1548	1.2	83.2	12000	**F513_83.2 S3 ME3LB4**	430	**F513_83.2 P100 BE100LB4**	431
18.6	1443	2.0	77.6	20000	**F603_77.6 S3 ME3LB4**	434	**F603_77.6 P100 BE100LB4**	435
19.6	1368	3.7	73.6	35000	**F703_73.6 S3 ME3LB4**	438	**F703_73.6 P100 BE100LB4**	439
21.1	1270	2.3	68.3	20000	**F603_68.3 S3 ME3LB4**	434	**F603_68.3 P100 BE100LB4**	435
21.9	1225	1.5	65.8	12000	**F513_65.8 S3 ME3LB4**	430	**F513_65.8 P100 BE100LB4**	431
22.8	1172	2.5	63.0	20000	**F603_63.0 S3 ME3LB4**	434	**F603_63.0 P100 BE100LB4**	435
23.9	1121	1.0	60.2	8500	**F413_60.2 S3 ME3LB4**	426	**F413_60.2 P100 BE100LB4**	427
27.8	964	3.0	51.8	20000	**F603_51.8 S3 ME3LB4**	434	**F603_51.8 P100 BE100LB4**	435
28.0	958	1.1	51.5	8500	**F413_51.5 S3 ME3LB4**	426	**F413_51.5 P100 BE100LB4**	427
29.4	910	2.0	48.9	12000	**F513_48.9 S3 ME3LB4**	430	**F513_48.9 P100 BE100LB4**	431
30	911	1.2	47.9	8500	**F412_47.9 S3 ME3LB4**	426	**F412_47.9 P100 BE100LB4**	427
30	890	3.3	47.8	20000	**F603_47.8 S3 ME3LB4**	434	**F603_47.8 P100 BE100LB4**	435
38	725	1.5	38.2	8500	**F412_38.2 S3 ME3LB4**	426	**F412_38.2 P100 BE100LB4**	427
39	706	2.4	37.1	11800	**F512_37.1 S3 ME3LB4**	430	**F512_37.1 P100 BE100LB4**	431
42	653	0.9	34.4	5810	**F312_34.4 S3 ME3LB4**	422	**F312_34.4 P100 BE100LB4**	423
48	572	1.0	30.1	5770	**F312_30.1 S3 ME3LB4**	422	**F312_30.1 P100 BE100LB4**	423
48	572	1.9	30.1	8290	**F412_30.1 S3 ME3LB4**	426	**F412_30.1 P100 BE100LB4**	427
48	571	3.0	30.0	11200	**F512_30.0 S3 ME3LB4**	430	**F512_30.0 P100 BE100LB4**	431
53	518	1.2	27.3	5720	**F312_27.3 S3 ME3LB4**	422	**F312_27.3 P100 BE100LB4**	423
60	458	2.4	24.1	7960	**F412_24.1 S3 ME3LB4**	426	**F412_24.1 P100 BE100LB4**	427
61	451	0.9	23.8	3100	**F252_23.8 S3 ME3LB4**	418	**F252_23.8 P100 BE100LB4**	419
62	444	1.4	23.4	5620	**F312_23.4 S3 ME3LB4**	422	**F312_23.4 P100 BE100LB4**	423
66	415	1.0	21.8	2800	**F252_21.8 S3 ME3LB4**	418	**F252_21.8 P100 BE100LB4**	419
68	401	1.5	21.1	5540	**F312_21.1 S3 ME3LB4**	422	**F312_21.1 P100 BE100LB4**	423
76	359	3.0	18.9	7560	**F412_18.9 S3 ME3LB4**	426	**F412_18.9 P100 BE100LB4**	427
77	354	1.1	18.6	2830	**F252_18.6 S3 ME3LB4**	418	**F252_18.6 P100 BE100LB4**	419
78	351	1.7	18.5	5430	**F312_18.5 S3 ME3LB4**	422	**F312_18.5 P100 BE100LB4**	423
84	325	3.2	17.1	7400	**F412_17.1 S3 ME3LB4**	426	**F412_17.1 P100 BE100LB4**	427
86	319	1.9	16.8	5340	**F312_16.8 S3 ME3LB4**	422	**F312_16.8 P100 BE100LB4**	423
87	316	1.3	16.6	2830	**F252_16.6 S3 ME3LB4**	418	**F252_16.6 P100 BE100LB4**	419
100	275	1.5	14.5	2810	**F252_14.5 S3 ME3LB4**	418	**F252_14.5 P100 BE100LB4**	419
103	265	2.3	13.9	5150	**F312_13.9 S3 ME3LB4**	422	**F312_13.9 P100 BE100LB4**	423
111	247	1.6	13.0	2790	**F252_13.0 S3 ME3LB4**	418	**F252_13.0 P100 BE100LB4**	419
113	242	2.5	12.7	5060	**F312_12.7 S3 ME3LB4**	422	**F312_12.7 P100 BE100LB4**	423
134	204	2.9	10.7	4880	**F312_10.7 S3 ME3LB4**	422	**F312_10.7 P100 BE100LB4**	423
136	202	2.0	10.6	2730	**F252_10.6 S3 ME3LB4**	418	**F252_10.6 P100 BE100LB4**	419
154	178	1.5	9.4	2710	**F252_9.4 S3 ME3LB4**	418	**F252_9.4 P100 BE100LB4**	419
160	171	2.3	9.0	4650	**F312_9.0 S3 ME3LB4**	422	**F312_9.0 P100 BE100LB4**	423
165	166	0.9	8.7	1820	**F202_8.7 S3 ME3LB4**	414	**F202_8.7 P100 BE100LB4**	415
172	159	1.6	8.4	2660	**F252_8.4 S3 ME3LB4**	418	**F252_8.4 P100 BE100LB4**	419
175	156	2.5	8.2	4550	**F312_8.2 S3 ME3LB4**	422	**F312_8.2 P100 BE100LB4**	423
184	149	1.0	7.8	1790	**F202_7.8 S3 ME3LB4**	414	**F202_7.8 P100 BE100LB4**	415
207	132	3.0	6.9	4360	**F312_6.9 S3 ME3LB4**	422	**F312_6.9 P100 BE100LB4**	423
210	131	2.0	6.9	2560	**F252_6.9 S3 ME3LB4**	418	**F252_6.9 P100 BE100LB4**	419
222	123	2.9	13.0	2510	**F252_13.0 S3 ME3LB2**	418	**F252_13.0 P100 BE100L2**	419
225	122	1.1	6.4	1730	**F202_6.4 S3 ME3LB4**	414	**F202_6.4 P100 BE100LB4**	415

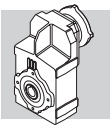

3 kW

n_2 min-1	M_2 Nm	S	i	R_{n2} N	IE2		IEC IE2	
256	106	1.3	11.2	1680	**F202_11.2 S3 ME3LB2**	414	**F202_11.2 P100 BE100L2**	415
271	100	3.2	10.6	2410	**F252_10.6 S3 ME3LB2**	418	**F252_10.6 P100 BE100L2**	419
308	88	3.0	9.4	2350	**F252_9.4 S3 ME3LB2**	418	**F252_9.4 P100 BE100L2**	419
330	83	1.5	8.7	1600	**F202_8.7 S3 ME3LB2**	414	**F202_8.7 P100 BE100L2**	415
343	79	3.3	8.4	2290	**F252_8.4 S3 ME3LB2**	418	**F252_8.4 P100 BE100L2**	419
368	74	1.6	7.8	1560	**F202_7.8 S3 ME3LB2**	414	**F202_7.8 P100 BE100L2**	415
449	61	1.7	6.4	1480	**F202_6.4 S3 ME3LB2**	414	**F202_6.4 P100 BE100L2**	415

4 kW

n_2 min-1	M_2 Nm	S	i	R_{n2} N	IE2		IEC IE2	
2.3	15202	0.9	625.6	55000	**F904_625.6 S4 ME4SA4**	444	**F904_625.6 P112 BE112M4**	445
2.5	14033	1.0	577.5	55000	**F904_577.5 S4 ME4SA4**	444	**F904_577.5 P112 BE112M4**	445
2.9	12042	1.2	495.6	55000	**F904_495.6 S4 ME4SA4**	444	**F904_495.6 P112 BE112M4**	445
3.1	11116	1.3	457.5	55000	**F904_457.5 S4 ME4SA4**	444	**F904_457.5 P112 BE112M4**	445
3.7	9526	1.5	392.0	55000	**F904_392.0 S4 ME4SA4**	444	**F904_392.0 P112 BE112M4**	445
4.0	8793	1.6	361.8	55000	**F904_361.8 S4 ME4SA4**	444	**F904_361.8 P112 BE112M4**	445
4.1	8594	0.9	353.7	45000	**F804_353.7 S4 ME4SA4**	441	**F804_353.7 P112 BE112M4**	442
4.9	7210	1.1	296.7	45000	**F804_296.7 S4 ME4SA4**	441	**F804_296.7 P112 BE112M4**	442
4.9	7074	2.0	291.1	55000	**F904_291.1 S4 ME4SA4**	444	**F904_291.1 P112 BE112M4**	445
5.3	6656	1.2	273.9	45000	**F804_273.9 S4 ME4SA4**	441	**F804_273.9 P112 BE112M4**	442
5.4	6530	2.1	268.7	55000	**F904_268.7 S4 ME4SA4**	444	**F904_268.7 P112 BE112M4**	445
6.1	5700	0.9	234.6	35000	**F704_234.6 S4 ME4SA4**	438	**F704_234.6 P112 BE112M4**	439
6.2	5623	2.5	231.4	55000	**F904_231.4 S4 ME4SA4**	444	**F904_231.4 P112 BE112M4**	445
6.6	5309	1.5	218.5	45000	**F804_218.5 S4 ME4SA4**	441	**F804_218.5 P112 BE112M4**	442
6.7	5262	1.0	216.5	35000	**F704_216.5 S4 ME4SA4**	438	**F704_216.5 P112 BE112M4**	439
6.7	5190	2.7	213.6	55000	**F904_213.6 S4 ME4SA4**	444	**F904_213.6 P112 BE112M4**	445
7.2	5022	1.6	200.0	45000	**F803_200.0 S4 ME4SA4**	441	**F803_200.0 P112 BE112M4**	442
7.3	4922	1.0	196.0	35000	**F703_196.0 S4 ME4SA4**	438	**F703_196.0 P112 BE112M4**	439
7.4	4875	2.9	194.2	55000	**F903_194.2 S4 ME4SA4**	444	**F903_194.2 P112 BE112M4**	445
7.8	4636	1.7	184.6	45000	**F803_184.6 S4 ME4SA4**	441	**F803_184.6 P112 BE112M4**	442
8.0	4544	1.1	180.9	35000	**F703_180.9 S4 ME4SA4**	438	**F703_180.9 P112 BE112M4**	439
8.0	4500	3.1	179.2	55000	**F903_179.2 S4 ME4SA4**	444	**F903_179.2 P112 BE112M4**	445
8.6	4185	1.2	166.7	35000	**F703_166.7 S4 ME4SA4**	438	**F703_166.7 P112 BE112M4**	439
8.8	4089	3.4	162.8	55000	**F903_162.8 S4 ME4SA4**	444	**F903_162.8 P112 BE112M4**	445
9.0	4023	2.0	160.2	45000	**F803_160.2 S4 ME4SA4**	441	**F803_160.2 P112 BE112M4**	442
9.4	3863	1.3	153.8	35000	**F703_153.8 S4 ME4SA4**	438	**F703_153.8 P112 BE112M4**	439
9.7	3714	2.2	147.9	45000	**F803_147.9 S4 ME4SA4**	441	**F803_147.9 P112 BE112M4**	442
10.8	3338	1.5	133.0	35000	**F703_133.0 S4 ME4SA4**	438	**F703_133.0 P112 BE112M4**	439
10.9	3332	2.4	132.7	45000	**F803_132.7 S4 ME4SA4**	441	**F803_132.7 P112 BE112M4**	442
11.0	3277	0.9	130.5	20000	**F603_130.5 S4 ME4SA4**	434	**F603_130.5 P112 BE112M4**	435
11.7	3082	1.6	122.7	35000	**F703_122.7 S4 ME4SA4**	438	**F703_122.7 P112 BE112M4**	439
11.8	3076	2.6	122.5	45000	**F803_122.5 S4 ME4SA4**	441	**F803_122.5 P112 BE112M4**	442
12.0	3025	1.0	120.5	20000	**F603_120.5 S4 ME4SA4**	434	**F603_120.5 P112 BE112M4**	435
12.7	2856	2.8	113.8	45000	**F803_113.8 S4 ME4SA4**	441	**F803_113.8 P112 BE112M4**	442
13.1	2752	1.8	109.6	35000	**F703_109.6 S4 ME4SA4**	438	**F703_109.6 P112 BE112M4**	439
13.5	2671	1.1	106.4	20000	**F603_106.4 S4 ME4SA4**	434	**F603_106.4 P112 BE112M4**	435
13.7	2637	3.0	105.0	45000	**F803_105.0 S4 ME4SA4**	441	**F803_105.0 P112 BE112M4**	442
14.2	2541	2.0	101.2	35000	**F703_101.2 S4 ME4SA4**	438	**F703_101.2 P112 BE112M4**	439
14.7	2466	1.2	98.2	20000	**F603_98.2 S4 ME4SA4**	434	**F603_98.2 P112 BE112M4**	435
15.6	2323	2.2	92.5	35000	**F703_92.5 S4 ME4SA4**	438	**F703_92.5 P112 BE112M4**	439
16.9	2144	2.3	85.4	35000	**F703_85.4 S4 ME4SA4**	438	**F703_85.4 P112 BE112M4**	439
17.1	2110	1.4	84.0	20000	**F603_84.0 S4 ME4SA4**	434	**F603_84.0 P112 BE112M4**	435
18.6	1947	1.5	77.6	20000	**F603_77.6 S4 ME4SA4**	434	**F603_77.6 P112 BE112M4**	435
19.6	1847	2.7	73.6	35000	**F703_73.6 S4 ME4SA4**	438	**F703_73.6 P112 BE112M4**	439
21.1	1715	1.7	68.3	20000	**F603_68.3 S4 ME4SA4**	434	**F603_68.3 P112 BE112M4**	435
21.2	1705	2.9	67.9	35000	**F703_67.9 S4 ME4SA4**	438	**F703_67.9 P112 BE112M4**	439
21.9	1653	1.1	65.8	12000	**F513_65.8 S4 ME4SA4**	430	**F513_65.8 P112 BE112M4**	431
22.8	1583	1.8	63.0	20000	**F603_63.0 S4 ME4SA4**	434	**F603_63.0 P112 BE112M4**	435

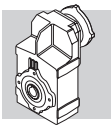

4 kW

n_2 min-1	M_2 Nm	S	i	R_{n2} N	IE2		IEC IE2	
23.0	1569	3.2	62.5	35000	**F703_62.5 S4 ME4SA4**	438	**F703_62.5 P112 BE112M4**	439
25.0	1449	3.5	57.7	35000	**F703_57.7 S4 ME4SA4**	438	**F703_57.7 P112 BE112M4**	439
27.8	1301	2.2	51.8	20000	**F603_51.8 S4 ME4SA4**	434	**F603_51.8 P112 BE112M4**	435
29.4	1228	1.5	48.9	11600	**F513_48.9 S4 ME4SA4**	430	**F513_48.9 P112 BE112M4**	431
30	1201	2.4	47.8	20000	**F603_47.8 S4 ME4SA4**	434	**F603_47.8 P112 BE112M4**	435
34	1057	2.7	42.1	20000	**F603_42.1 S4 ME4SA4**	434	**F603_42.1 P112 BE112M4**	435
37	975	3.0	38.8	20000	**F603_38.8 S4 ME4SA4**	434	**F603_38.8 P112 BE112M4**	435
38	979	1.1	38.2	7720	**F412_38.2 S4 ME4SA4**	426	**F412_38.2 P112 BE112M4**	427
39	953	1.8	37.1	11200	**F512_37.1 S4 ME4SA4**	430	**F512_37.1 P112 BE112M4**	431
45	806	3.6	32.1	20000	**F603_32.1 S4 ME4SA4**	434		
48	773	1.4	30.1	7610	**F412_30.1 S4 ME4SA4**	426	**F412_30.1 P112 BE112M4**	427
48	770	2.2	30.0	10700	**F512_30.0 S4 ME4SA4**	430	**F512_30.0 P112 BE112M4**	431
57	638	3.0	25.4	20000	**F603_25.4 S4 ME4SA4**	434	**F603_25.4 P112 BE112M4**	435
60	619	1.8	24.1	7420	**F412_24.1 S4 ME4SA4**	426	**F412_24.1 P112 BE112M4**	427
61	610	2.7	23.8	10200	**F512_23.8 S4 ME4SA4**	430	**F512_23.8 P112 BE112M4**	431
61	589	3.2	23.5	20000	**F603_23.5 S4 ME4SA4**	434	**F603_23.5 P112 BE112M4**	435
62	600	1.0	23.4	5040	**F312_23.4 S4 ME4SA4**	422	**F312_23.4 P112 BE112M4**	423
68	542	1.1	21.1	5020	**F312_21.1 S4 ME4SA4**	422	**F312_21.1 P112 BE112M4**	423
76	485	2.2	18.9	7150	**F412_18.9 S4 ME4SA4**	426	**F412_18.9 P112 BE112M4**	427
77	483	3.2	18.8	9640	**F512_18.8 S4 ME4SA4**	430	**F512_18.8 P112 BE112M4**	431
78	474	1.3	18.5	4980	**F312_18.5 S4 ME4SA4**	422	**F312_18.5 P112 BE112M4**	423
84	439	2.4	17.1	7030	**F412_17.1 S4 ME4SA4**	426	**F412_17.1 P112 BE112M4**	427
86	431	1.4	16.8	4930	**F312_16.8 S4 ME4SA4**	422	**F312_16.8 P112 BE112M4**	423
98	375	2.7	14.6	6820	**F412_14.6 S4 ME4SA4**	426	**F412_14.6 P112 BE112M4**	427
103	358	1.7	13.9	4820	**F312_13.9 S4 ME4SA4**	422	**F312_13.9 P112 BE112M4**	423
113	326	1.8	12.7	4750	**F312_12.7 S4 ME4SA4**	422	**F312_12.7 P112 BE112M4**	423
134	276	3.3	10.8	6380	**F412_10.8 S4 ME4SA4**	426	**F412_10.8 P112 BE112M4**	427
134	276	2.2	10.7	4620	**F312_10.7 S4 ME4SA4**	422	**F312_10.7 P112 BE112M4**	423
158	234	3.0	9.1	6160	**F412_9.1 S4 ME4SA4**	426	**F412_9.1 P112 BE112M4**	427
160	231	1.7	9.0	4420	**F312_9.0 S4 ME4SA4**	422	**F312_9.0 P112 BE112M4**	423
175	211	1.8	8.2	4350	**F312_8.2 S4 ME4SA4**	422	**F312_8.2 P112 BE112M4**	423
207	178	2.2	6.9	4200	**F312_6.9 S4 ME4SA4**	422	**F312_6.9 P112 BE112M4**	423
228	159	3.5	12.7	4120	**F312_12.7 S4 ME4SA2**	422	**F312_12.7 P112 BE112M2**	423
322	113	3.4	9.0	3760	**F312_9.0 S4 ME4SA2**	422	**F312_9.0 P112 BE112M2**	423

5.5 kW

n_2 min-1	M_2 Nm	S	i	R_{n2} N	IE2	IE3		IEC IE2	IE3	
2.9	16057	0.9	495.6	55000	**F904_495.6 S4 ME4SB4**	**F904_495.6 S4 MX4SB4**	444	**F904_495.6 P132 BE132S4**	**F904_495.6 P132 BX132S4**	445
3.2	14821	0.9	457.5	55000	**F904_457.5 S4 ME4SB4**	**F904_457.5 S4 MX4SB4**	444	**F904_457.5 P132 BE132S4**	**F904_457.5 P132 BX132S4**	445
3.7	12701	1.1	392.0	55000	**F904_392.0 S4 ME4SB4**	**F904_392.0 S4 MX4SB4**	444	**F904_392.0 P132 BE132S4**	**F904_392.0 P132 BX132S4**	445
4.0	11724	1.2	361.8	55000	**F904_361.8 S4 ME4SB4**	**F904_361.8 S4 MX4SB4**	444	**F904_361.8 P132 BE132S4**	**F904_361.8 P132 BX132S4**	445
5.0	9432	1.5	291.1	55000	**F904_291.1 S4 ME4SB4**	**F904_291.1 S4 MX4SB4**	444	**F904_291.1 P132 BE132S4**	**F904_291.1 P132 BX132S4**	445
5.3	8874	0.9	273.9	45000	**F804_273.9 S4 ME4SB4**	**F804_273.9 S4 MX4SB4**	441	**F804_273.9 P132 BE132S4**	**F804_273.9 P132 BX132S4**	442
5.4	8707	1.6	268.7	55000	**F904_268.7 S4 ME4SB4**	**F904_268.7 S4 MX4SB4**	444	**F904_268.7 P132 BE132S4**	**F904_268.7 P132 BX132S4**	445
6.3	7497	1.9	231.4	55000	**F904_231.4 S4 ME4SB4**	**F904_231.4 S4 MX4SB4**	444	**F904_231.4 P132 BE132S4**	**F904_231.4 P132 BX132S4**	445
6.7	7079	1.1	218.5	45000	**F804_218.5 S4 ME4SB4**	**F804_218.5 S4 MX4SB4**	441	**F804_218.5 P132 BE132S4**	**F804_218.5 P132 BX132S4**	442
6.8	6920	2.0	213.6	55000	**F904_213.6 S4 ME4SB4**	**F904_213.6 S4 MX4SB4**	444	**F904_213.6 P132 BE132S4**	**F904_213.6 P132 BX132S4**	445
7.3	6696	1.2	200.0	45000	**F803_200.0 S4 ME4SB4**	**F803_200.0 S4 MX4SB4**	441	**F803_200.0 P132 BE132S4**	**F803_200.0 P132 BX132S4**	442
7.5	6500	2.2	194.2	55000	**F903_194.2 S4 ME4SB4**	**F903_194.2 S4 MX4SB4**	444	**F903_194.2 P132 BE132S4**	**F903_194.2 P132 BX132S4**	445
7.9	6181	1.3	184.6	45000	**F803_184.6 S4 ME4SB4**	**F803_184.6 S4 MX4SB4**	441	**F803_184.6 P132 BE132S4**	**F803_184.6 P132 BX132S4**	442
8.1	6000	2.3	179.2	55000	**F903_179.2 S4 ME4SB4**	**F903_179.2 S4 MX4SB4**	444	**F903_179.2 P132 BE132S4**	**F903_179.2 P132 BX132S4**	445
8.8	5580	0.9	166.7	35000	**F703_166.7 S4 ME4SB4**	**F703_166.7 S4 MX4SB4**	438	**F703_166.7 P132 BE132S4**	**F703_166.7 P132 BX132S4**	439
9.0	5452	2.6	162.8	55000	**F903_162.8 S4 ME4SB4**	**F903_162.8 S4 MX4SB4**	444	**F903_162.8 P132 BE132S4**	**F903_162.8 P132 BX132S4**	445
9.1	5364	1.5	160.2	45000	**F803_160.2 S4 ME4SB4**	**F803_160.2 S4 MX4SB4**	441	**F803_160.2 P132 BE132S4**	**F803_160.2 P132 BX132S4**	442
9.5	5151	1.0	153.8	35000	**F703_153.8 S4 ME4SB4**	**F703_153.8 S4 MX4SB4**	438	**F703_153.8 P132 BE132S4**	**F703_153.8 P132 BX132S4**	439
9.7	5032	2.8	150.3	55000	**F903_150.3 S4 ME4SB4**	**F903_150.3 S4 MX4SB4**	444	**F903_150.3 P132 BE132S4**	**F903_150.3 P132 BX132S4**	445
9.9	4952	1.6	147.9	45000	**F803_147.9 S4 ME4SB4**	**F803_147.9 S4 MX4SB4**	441	**F803_147.9 P132 BE132S4**	**F803_147.9 P132 BX132S4**	442
10.6	4598	3.0	137.3	55000	**F903_137.3 S4 ME4SB4**	**F903_137.3 S4 MX4SB4**	444	**F903_137.3 P132 BE132S4**	**F903_137.3 P132 BX132S4**	445
11.0	4451	1.1	133.0	35000	**F703_133.0 S4 ME4SB4**	**F703_133.0 S4 MX4SB4**	438	**F703_133.0 P132 BE132S4**	**F703_133.0 P132 BX132S4**	439

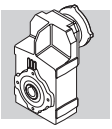

5.5 kW

n_2 min-1	M_2 Nm	S	i	R_{n2} N	IE2	IE3		IE2	IE3	
11.0	4443	1.8	132.7	45000	**F803_132.7 S4 ME4SB4**	**F803_132.7 S4 MX4SB4**	441	**F803_132.7 P132 BE132S4**	**F803_132.7 P132 BX132S4**	442
11.5	4244	3.3	126.8	55000	**F903_126.8 S4 ME4SB4**	**F903_126.8 S4 MX4SB4**	444	**F903_126.8 P132 BE132S4**	**F903_126.8 P132 BX132S4**	445
11.9	4109	1.2	122.7	35000	**F703_122.7 S4 ME4SB4**	**F703_122.7 S4 MX4SB4**	438	**F703_122.7 P132 BE132S4**	**F703_122.7 P132 BX132S4**	439
11.9	4101	2.0	122.5	45000	**F803_122.5 S4 ME4SB4**	**F803_122.5 S4 MX4SB4**	441	**F803_122.5 P132 BE132S4**	**F803_122.5 P132 BX132S4**	442
12.8	3808	2.1	113.8	45000	**F803_113.8 S4 ME4SB4**	**F803_113.8 S4 MX4SB4**	441	**F803_113.8 P132 BE132S4**	**F803_113.8 P132 BX132S4**	442
13.3	3670	1.4	109.6	35000	**F703_109.6 S4 ME4SB4**	**F703_109.6 S4 MX4SB4**	438	**F703_109.6 P132 BE132S4**	**F703_109.6 P132 BX132S4**	439
13.9	3515	2.3	105.0	45000	**F803_105.0 S4 ME4SB4**	**F803_105.0 S4 MX4SB4**	441	**F803_105.0 P132 BE132S4**	**F803_105.0 P132 BX132S4**	442
14.4	3388	1.5	101.2	35000	**F703_101.2 S4 ME4SB4**	**F703_101.2 S4 MX4SB4**	438	**F703_101.2 P132 BE132S4**	**F703_101.2 P132 BX132S4**	439
15.8	3097	1.6	92.5	35000	**F703_92.5 S4 ME4SB4**	**F703_92.5 S4 MX4SB4**	438	**F703_92.5 P132 BE132S4**	**F703_92.5 P132 BX132S4**	439
15.8	3090	2.6	92.3	45000	**F803_92.3 S4 ME4SB4**	**F803_92.3 S4 MX4SB4**	441	**F803_92.3 P132 BE132S4**	**F803_92.3 P132 BX132S4**	442
17.1	2859	1.7	85.4	35000	**F703_85.4 S4 ME4SB4**	**F703_85.4 S4 MX4SB4**	438	**F703_85.4 P132 BE132S4**	**F703_85.4 P132 BX132S4**	439
17.1	2853	2.8	85.2	45000	**F803_85.2 S4 ME4SB4**	**F803_85.2 S4 MX4SB4**	441	**F803_85.2 P132 BE132S4**	**F803_85.2 P132 BX132S4**	442
17.4	2813	1.0	84.0	20000	**F603_84.0 S4 ME4SB4**	**F603_84.0 S4 MX4SB4**	434	**F603_84.0 P132 BE132S4**	**F603_84.0 P132 BX132S4**	435
18.8	2597	1.1	77.6	20000	**F603_77.6 S4 ME4SB4**	**F603_77.6 S4 MX4SB4**	434	**F603_77.6 P132 BE132S4**	**F603_77.6 P132 BX132S4**	435
19.1	2553	3.1	76.3	45000	**F803_76.3 S4 ME4SB4**	**F803_76.3 S4 MX4SB4**	441	**F803_76.3 P132 BE132S4**	**F803_76.3 P132 BX132S4**	442
19.8	2463	2.0	73.6	35000	**F703_73.6 S4 ME4SB4**	**F703_73.6 S4 MX4SB4**	438	**F703_73.6 P132 BE132S4**	**F703_73.6 P132 BX132S4**	439
20.7	2356	3.4	70.4	45000	**F803_70.4 S4 ME4SB4**	**F803_70.4 S4 MX4SB4**	441	**F803_70.4 P132 BE132S4**	**F803_70.4 P132 BX132S4**	442
21.4	2286	1.3	68.3	20000	**F603_68.3 S4 ME4SB4**	**F603_68.3 S4 MX4SB4**	434	**F603_68.3 P132 BE132S4**	**F603_68.3 P132 BX132S4**	435
21.5	2273	2.2	67.9	35000	**F703_67.9 S4 ME4SB4**	**F703_67.9 S4 MX4SB4**	438	**F703_67.9 P132 BE132S4**	**F703_67.9 P132 BX132S4**	439
23.2	2110	1.4	63.0	20000	**F603_63.0 S4 ME4SB4**	**F603_63.0 S4 MX4SB4**	434	**F603_63.0 P132 BE132S4**	**F603_63.0 P132 BX132S4**	435
23.4	2093	2.4	62.5	35000	**F703_62.5 S4 ME4SB4**	**F703_62.5 S4 MX4SB4**	438	**F703_62.5 P132 BE132S4**	**F703_62.5 P132 BX132S4**	439
25.3	1932	2.6	57.7	35000	**F703_57.7 S4 ME4SB4**	**F703_57.7 S4 MX4SB4**	438	**F703_57.7 P132 BE132S4**	**F703_57.7 P132 BX132S4**	439
28.2	1735	1.7	51.8	20000	**F603_51.8 S4 ME4SB4**	**F603_51.8 S4 MX4SB4**	434	**F603_51.8 P132 BE132S4**	**F603_51.8 P132 BX132S4**	435
30	1639	3.1	49.0	35000	**F703_49.0 S4 ME4SB4**	**F703_49.0 S4 MX4SB4**	438	**F703_49.0 P132 BE132S4**	**F703_49.0 P132 BX132S4**	439
30	1637	1.1	48.9	10300	**F513_48.9 S4 ME4SB4**	**F513_48.9 S4 MX4SB4**	430	**F513_48.9 P132 BE132S4**	**F513_48.9 P132 BX132S4**	431
31	1602	1.8	47.8	20000	**F603_47.8 S4 ME4SB4**	**F603_47.8 S4 MX4SB4**	434	**F603_47.8 P132 BE132S4**	**F603_47.8 P132 BX132S4**	435
32	1513	3.3	45.2	34300	**F703_45.2 S4 ME4SB4**	**F703_45.2 S4 MX4SB4**	438	**F703_45.2 P132 BE132S4**	**F703_45.2 P132 BX132S4**	439
35	1409	2.1	42.1	20000	**F603_42.1 S4 ME4SB4**	**F603_42.1 S4 MX4SB4**	434	**F603_42.1 P132 BE132S4**	**F603_42.1 P132 BX132S4**	435
38	1301	2.2	38.8	20000	**F603_38.8 S4 ME4SB4**	**F603_38.8 S4 MX4SB4**	434	**F603_38.8 P132 BE132S4**	**F603_38.8 P132 BX132S4**	435
39	1270	1.3	37.1	10300	**F512_37.1 S4 ME4SB4**	**F512_37.1 S4 MX4SB4**	430	**F512_37.1 P132 BE132S4**	**F512_37.1 P132 BX132S4**	431
46	1074	2.7	32.1	20000	**F603_32.1 S4 ME4SB4**	**F603_32.1 S4 MX4SB4**	434	**F603_32.1 P132 BE132S4**	**F603_32.1 P132 BX132S4**	435
48	1030	1.1	30.1	6580	**F412_30.1 S4 ME4SB4**	**F412_30.1 S4 MX4SB4**	426	**F412_30.1 P132 BE132S4**	**F412_30.1 P132 BX132S4**	427
49	1027	1.7	30.0	9950	**F512_30.0 S4 ME4SB4**	**F512_30.0 S4 MX4SB4**	430	**F512_30.0 P132 BE132S4**	**F512_30.0 P132 BX132S4**	431
49	992	2.9	29.6	20000	**F603_29.6 S4 ME4SB4**	**F603_29.6 S4 MX4SB4**	434	**F603_29.6 P132 BE132S4**	**F603_29.6 P132 BX132S4**	435
57	851	2.2	25.4	20000	**F603_25.4 S4 ME4SB4**	**F603_25.4 S4 MX4SB4**	434	**F603_25.4 P132 BE132S4**	**F603_25.4 P132 BX132S4**	435
61	825	1.3	24.1	6580	**F412_24.1 S4 ME4SB4**	**F412_24.1 S4 MX4SB4**	426	**F412_24.1 P132 BE132S4**	**F412_24.1 P132 BX132S4**	427
61	814	2.0	23.8	9560	**F512_23.8 S4 ME4SB4**	**F512_23.8 S4 MX4SB4**	430	**F512_23.8 P132 BE132S4**	**F512_23.8 P132 BX132S4**	431
62	786	2.4	23.5	20000	**F603_23.5 S4 ME4SB4**	**F603_23.5 S4 MX4SB4**	434	**F603_23.5 P132 BE132S4**	**F603_23.5 P132 BX132S4**	435
71	692	2.7	20.7	20000	**F603_20.7 S4 ME4SB4**	**F603_20.7 S4 MX4SB4**	434	**F603_20.7 P132 BE132S4**	**F603_20.7 P132 BX132S4**	435
77	638	3.0	19.1	20000	**F603_19.1 S4 ME4SB4**	**F603_19.1 S4 MX4SB4**	434	**F603_19.1 P132 BE132S4**	**F603_19.1 P132 BX132S4**	435
77	646	1.7	18.9	6480	**F412_18.9 S4 ME4SB4**	**F412_18.9 S4 MX4SB4**	426	**F412_18.9 P132 BE132S4**	**F412_18.9 P132 BX132S4**	427
78	644	2.4	18.8	9110	**F512_18.8 S4 ME4SB4**	**F512_18.8 S4 MX4SB4**	430	**F512_18.8 P132 BE132S4**	**F512_18.8 P132 BX132S4**	431
79	632	0.9	18.5	4480	**F312_18.5 S4 ME4SB4**	**F312_18.5 S4 MX4SB4**	422	**F312_18.5 P132 BE132S4**	**F312_18.5 P132 BX132S4**	423
85	585	1.8	17.1	6410	**F412_17.1 S4 ME4SB4**	**F412_17.1 S4 MX4SB4**	426	**F412_17.1 P132 BE132S4**	**F412_17.1 P132 BX132S4**	427
87	575	1.0	16.8	4300	**F312_16.8 S4 ME4SB4**	**F312_16.8 S4 MX4SB4**	422	**F312_16.8 P132 BE132S4**	**F312_16.8 P132 BX132S4**	423
100	500	2.0	14.6	6280	**F412_14.6 S4 ME4SB4**	**F412_14.6 S4 MX4SB4**	426	**F412_14.6 P132 BE132S4**	**F412_14.6 P132 BX132S4**	427
104	478	3.0	14.0	8520	**F512_14.0 S4 ME4SB4**	**F512_14.0 S4 MX4SB4**	430	**F512_14.0 P132 BE132S4**	**F512_14.0 P132 BX132S4**	431
105	477	1.3	13.9	4180	**F312_13.9 S4 ME4SB4**	**F312_13.9 S4 MX4SB4**	422	**F312_13.9 P132 BE132S4**	**F312_13.9 P132 BX132S4**	423
115	435	1.4	12.7	3980	**F312_12.7 S4 ME4SB4**	**F312_12.7 S4 MX4SB4**	422	**F312_12.7 P132 BE132S4**	**F312_12.7 P132 BX132S4**	423
131	380	3.5	11.1	8050	**F512_11.1 S4 ME4SB4**	**F512_11.1 S4 MX4SB4**	430	**F512_11.1 P132 BE132S4**	**F512_11.1 P132 BX132S4**	431
136	368	2.4	10.8	5970	**F412_10.8 S4 ME4SB4**	**F412_10.8 S4 MX4SB4**	426	**F412_10.8 P132 BE132S4**	**F412_10.8 P132 BX132S4**	427
136	368	1.6	10.7	3880	**F312_10.7 S4 ME4SB4**	**F312_10.7 S4 MX4SB4**	422	**F312_10.7 P132 BE132S4**	**F312_10.7 P132 BX132S4**	423
160	312	2.2	9.1	5810	**F412_9.1 S4 ME4SB4**	**F412_9.1 S4 MX4SB4**	426	**F412_9.1 P132 BE132S4**	**F412_9.1 P132 BX132S4**	427
161	310	3.6	9.1	7590	**F512_9.1 S4 ME4SB4**	**F512_9.1 S4 MX4SB4**	430	**F512_9.1 P132 BE132S4**	**F512_9.1 P132 BX132S4**	431
162	308	1.3	9.0	3850	**F312_9.0 S4 ME4SB4**	**F312_9.0 S4 MX4SB4**	422	**F312_9.0 P132 BE132S4**	**F312_9.0 P132 BX132S4**	423
177	281	1.4	8.2	3750	**F312_8.2 S4 ME4SB4**	**F312_8.2 S4 MX4SB4**	422	**F312_8.2 P132 BE132S4**	**F312_8.2 P132 BX132S4**	423
200	250	3.3	14.6	5510	**F412_14.6 S4 ME4SB2**		426	**F412_14.6 P132 BE132SA2**		427
210	238	1.6	6.9	3610	**F312_6.9 S4 ME4SB4**	**F312_6.9 S4 MX4SB4**	422	**F312_6.9 P132 BE132S4**	**F312_6.9 P132 BX132S4**	423
217	230	2.8	6.7	5430	**F412_6.7 S4 ME4SB4**	**F412_6.7 S4 MX4SB4**	426	**F412_6.7 P132 BE132S4**	**F412_6.7 P132 BX132S4**	427
272	184	4.0	10.8	5120	**F412_10.8 S4 ME4SB2**		426	**F412_10.8 P132 BE132SA2**		427
320	156	3.9	9.1	4930	**F412_9.1 S4 ME4SB2**		426	**F412_9.1 P132 BE132SA2**		427

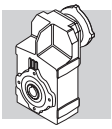

7.5 kW

n_2 min-1	M_2 Nm	S	i	R_{n2} N	IE2	IE3		IE2	IE3	
4.0	15957	0.9	361.8	55000	**F904_361.8 S4 ME4LA4**	**F904_361.8 S4 MX4LA4**	444	**F904_361.8 P132 BE132MA4**	**F904_361.8 P132 BX132MA4**	445
5.0	12838	1.1	291.1	55000	**F904_291.1 S4 ME4LA4**	**F904_291.1 S4 MX4LA4**	444	**F904_291.1 P132 BE132MA4**	**F904_291.1 P132 BX132MA4**	445
5.4	11851	1.2	268.7	55000	**F904_268.7 S4 ME4LA4**	**F904_268.7 S4 MX4LA4**	444	**F904_268.7 P132 BE132MA4**	**F904_268.7 P132 BX132MA4**	445
6.3	10204	1.4	231.4	55000	**F904_231.4 S4 ME4LA4**	**F904_231.4 S4 MX4LA4**	444	**F904_231.4 P132 BE132MA4**	**F904_231.4 P132 BX132MA4**	445
6.8	9419	1.5	213.6	55000	**F904_213.6 S4 ME4LA4**	**F904_213.6 S4 MX4LA4**	444	**F904_213.6 P132 BE132MA4**	**F904_213.6 P132 BX132MA4**	445
7.3	9114	0.9	200.0	45000	**F803_200.0 S4 ME4LA4**	**F803_200.0 S4 MX4LA4**	441	**F803_200.0 P132 BE132MA4**	**F803_200.0 P132 BX132MA4**	442
7.5	8848	1.6	194.2	55000	**F903_194.2 S4 ME4LA4**	**F903_194.2 S4 MX4LA4**	444	**F903_194.2 P132 BE132MA4**	**F903_194.2 P132 BX132MA4**	445
7.9	8413	1.0	184.6	45000	**F803_184.6 S4 ME4LA4**	**F803_184.6 S4 MX4LA4**	441	**F803_184.6 P132 BE132MA4**	**F803_184.6 P132 BX132MA4**	442
8.1	8167	1.7	179.2	55000	**F903_179.2 S4 ME4LA4**	**F903_179.2 S4 MX4LA4**	444	**F903_179.2 P132 BE132MA4**	**F903_179.2 P132 BX132MA4**	445
8.9	7420	1.9	162.8	55000	**F903_162.8 S4 ME4LA4**	**F903_162.8 S4 MX4LA4**	444	**F903_162.8 P132 BE132MA4**	**F903_162.8 P132 BX132MA4**	445
9.1	7302	1.1	160.2	45000	**F803_160.2 S4 ME4LA4**	**F803_160.2 S4 MX4LA4**	441	**F803_160.2 P132 BE132MA4**	**F803_160.2 P132 BX132MA4**	442
9.7	6849	2.0	150.3	55000	**F903_150.3 S4 ME4LA4**	**F903_150.3 S4 MX4LA4**	444	**F903_150.3 P132 BE132MA4**	**F903_150.3 P132 BX132MA4**	445
9.8	6740	1.2	147.9	45000	**F803_147.9 S4 ME4LA4**	**F803_147.9 S4 MX4LA4**	441	**F803_147.9 P132 BE132MA4**	**F803_147.9 P132 BX132MA4**	442
10.6	6259	2.2	137.3	55000	**F903_137.3 S4 ME4LA4**	**F903_137.3 S4 MX4LA4**	444	**F903_137.3 P132 BE132MA4**	**F903_137.3 P132 BX132MA4**	445
11.0	6047	1.3	132.7	45000	**F803_132.7 S4 ME4LA4**	**F803_132.7 S4 MX4LA4**	441	**F803_132.7 P132 BE132MA4**	**F803_132.7 P132 BX132MA4**	442
11.5	5777	2.4	126.8	55000	**F903_126.8 S4 ME4LA4**	**F903_126.8 S4 MX4LA4**	444	**F903_126.8 P132 BE132MA4**	**F903_126.8 P132 BX132MA4**	445
11.9	5593	0.9	122.7	35000	**F703_122.7 S4 ME4LA4**	**F703_122.7 S4 MX4LA4**	438	**F703_122.7 P132 BE132MA4**	**F703_122.7 P132 BX132MA4**	439
11.9	5582	1.4	122.5	45000	**F803_122.5 S4 ME4LA4**	**F803_122.5 S4 MX4LA4**	441	**F803_122.5 P132 BE132MA4**	**F803_122.5 P132 BX132MA4**	442
12.8	5184	1.5	113.8	45000	**F803_113.8 S4 ME4LA4**	**F803_113.8 S4 MX4LA4**	441	**F803_113.8 P132 BE132MA4**	**F803_113.8 P132 BX132MA4**	442
13.0	5101	2.7	111.9	55000	**F903_111.9 S4 ME4LA4**	**F903_111.9 S4 MX4LA4**	444	**F903_111.9 P132 BE132MA4**	**F903_111.9 P132 BX132MA4**	445
13.3	4995	1.0	109.6	35000	**F703_109.6 S4 ME4LA4**	**F703_109.6 S4 MX4LA4**	438	**F703_109.6 P132 BE132MA4**	**F703_109.6 P132 BX132MA4**	439
13.9	4785	1.7	105.0	45000	**F803_105.0 S4 ME4LA4**	**F803_105.0 S4 MX4LA4**	441	**F803_105.0 P132 BE132MA4**	**F803_105.0 P132 BX132MA4**	442
14.1	4709	3.0	103.3	55000	**F903_103.3 S4 ME4LA4**	**F903_103.3 S4 MX4LA4**	444	**F903_103.3 P132 BE132MA4**	**F903_103.3 P132 BX132MA4**	445
14.4	4611	1.1	101.2	35000	**F703_101.2 S4 ME4LA4**	**F703_101.2 S4 MX4LA4**	438	**F703_101.2 P132 BE132MA4**	**F703_101.2 P132 BX132MA4**	439
15.2	4364	3.2	95.8	55000	**F903_95.8 S4 ME4LA4**	**F903_95.8 S4 MX4LA4**	444	**F903_95.8 P132 BE132MA4**	**F903_95.8 P132 BX132MA4**	445
15.7	4215	1.2	92.5	35000	**F703_92.5 S4 ME4LA4**	**F703_92.5 S4 MX4LA4**	438	**F703_92.5 P132 BE132MA4**	**F703_92.5 P132 BX132MA4**	439
15.8	4206	1.9	92.3	45000	**F803_92.3 S4 ME4LA4**	**F803_92.3 S4 MX4LA4**	441	**F803_92.3 P132 BE132MA4**	**F803_92.3 P132 BX132MA4**	442
16.5	4028	3.5	88.4	55000	**F903_88.4 S4 ME4LA4**	**F903_88.4 S4 MX4LA4**	444	**F903_88.4 P132 BE132MA4**	**F903_88.4 P132 BX132MA4**	445
17.0	3891	1.3	85.4	35000	**F703_85.4 S4 ME4LA4**	**F703_85.4 S4 MX4LA4**	438	**F703_85.4 P132 BE132MA4**	**F703_85.4 P132 BX132MA4**	439
17.1	3883	2.1	85.2	45000	**F803_85.2 S4 ME4LA4**	**F803_85.2 S4 MX4LA4**	441	**F803_85.2 P132 BE132MA4**	**F803_85.2 P132 BX132MA4**	442
19.1	3475	2.3	76.3	45000	**F803_76.3 S4 ME4LA4**	**F803_76.3 S4 MX4LA4**	441	**F803_76.3 P132 BE132MA4**	**F803_76.3 P132 BX132MA4**	442
19.8	3352	1.5	73.6	35000	**F703_73.6 S4 ME4LA4**	**F703_73.6 S4 MX4LA4**	438	**F703_73.6 P132 BE132MA4**	**F703_73.6 P132 BX132MA4**	439
20.7	3207	2.5	70.4	44700	**F803_70.4 S4 ME4LA4**	**F803_70.4 S4 MX4LA4**	441	**F803_70.4 P132 BE132MA4**	**F803_70.4 P132 BX132MA4**	442
21.3	3112	0.9	68.3	20000	**F603_68.3 S4 ME4LA4**	**F603_68.3 S4 MX4LA4**	434	**F603_68.3 P132 BE132MA4**	**F603_68.3 P132 BX132MA4**	435
21.4	3094	1.6	67.9	35000	**F703_67.9 S4 ME4LA4**	**F703_67.9 S4 MX4LA4**	438	**F703_67.9 P132 BE132MA4**	**F703_67.9 P132 BX132MA4**	439
23.1	2872	1.0	63.0	20000	**F603_63.0 S4 ME4LA4**	**F603_63.0 S4 MX4LA4**	434	**F603_63.0 P132 BE132MA4**	**F603_63.0 P132 BX132MA4**	435
23.3	2848	1.8	62.5	35000	**F703_62.5 S4 ME4LA4**	**F703_62.5 S4 MX4LA4**	438	**F703_62.5 P132 BE132MA4**	**F703_62.5 P132 BX132MA4**	439
23.7	2801	2.9	61.5	43500	**F803_61.5 S4 ME4LA4**	**F803_61.5 S4 MX4LA4**	441	**F803_61.5 P132 BE132MA4**	**F803_61.5 P132 BX132MA4**	442
25.2	2629	1.9	57.7	34900	**F703_57.7 S4 ME4LA4**	**F703_57.7 S4 MX4LA4**	438	**F703_57.7 P132 BE132MA4**	**F703_57.7 P132 BX132MA4**	439
25.6	2585	3.1	56.7	42600	**F803_56.7 S4 ME4LA4**	**F803_56.7 S4 MX4LA4**	441	**F803_56.7 P132 BE132MA4**	**F803_56.7 P132 BX132MA4**	442
28.1	2362	1.2	51.8	20000	**F603_51.8 S4 ME4LA4**	**F603_51.8 S4 MX4LA4**	434	**F603_51.8 P132 BE132MA4**	**F603_51.8 P132 BX132MA4**	435
29.7	2231	2.2	49.0	33800	**F703_49.0 S4 ME4LA4**	**F703_49.0 S4 MX4LA4**	438	**F703_49.0 P132 BE132MA4**	**F703_49.0 P132 BX132MA4**	439
30	2180	1.3	47.8	20000	**F603_47.8 S4 ME4LA4**	**F603_47.8 S4 MX4LA4**	434	**F603_47.8 P132 BE132MA4**	**F603_47.8 P132 BX132MA4**	435
32	2059	2.4	45.2	33200	**F703_45.2 S4 ME4LA4**	**F703_45.2 S4 MX4LA4**	438	**F703_45.2 P132 BE132MA4**	**F703_45.2 P132 BX132MA4**	439
35	1918	1.5	42.1	20000	**F603_42.1 S4 ME4LA4**	**F603_42.1 S4 MX4LA4**	434	**F603_42.1 P132 BE132MA4**	**F603_42.1 P132 BX132MA4**	435
37	1770	1.6	38.8	20000	**F603_38.8 S4 ME4LA4**	**F603_38.8 S4 MX4LA4**	434	**F603_38.8 P132 BE132MA4**	**F603_38.8 P132 BX132MA4**	435
39	1729	1.0	37.1	9090	**F512_37.1 S4 ME4LA4**	**F512_37.1 S4 MX4LA4**	430	**F512_37.1 P132 BE132MA4**	**F512_37.1 P132 BX132MA4**	431
45	1462	2.0	32.1	20000	**F603_32.1 S4 ME4LA4**	**F603_32.1 S4 MX4LA4**	434	**F603_32.1 P132 BE132MA4**	**F603_32.1 P132 BX132MA4**	435
48	1398	1.2	30.0	9010	**F512_30.0 S4 ME4LA4**	**F512_30.0 S4 MX4LA4**	430	**F512_30.0 P132 BE132MA4**	**F512_30.0 P132 BX132MA4**	431
49	1350	2.1	29.6	20000	**F603_29.6 S4 ME4LA4**	**F603_29.6 S4 MX4LA4**	434	**F603_29.6 P132 BE132MA4**	**F603_29.6 P132 BX132MA4**	435
57	1158	1.6	25.4	20000	**F603_25.4 S4 ME4LA4**	**F603_25.4 S4 MX4LA4**	434	**F603_25.4 P132 BE132MA4**	**F603_25.4 P132 BX132MA4**	435
60	1123	1.0	24.1	5500	**F412_24.1 S4 ME4LA4**	**F412_24.1 S4 MX4LA4**	426	**F412_24.1 P132 BE132MA4**	**F412_24.1 P132 BX132MA4**	427
61	1108	1.5	23.8	8810	**F512_23.8 S4 ME4LA4**	**F512_23.8 S4 MX4LA4**	430	**F512_23.8 P132 BE132MA4**	**F512_23.8 P132 BX132MA4**	431
62	1069	1.8	23.5	20000	**F603_23.5 S4 ME4LA4**	**F603_23.5 S4 MX4LA4**	434	**F603_23.5 P132 BE132MA4**	**F603_23.5 P132 BX132MA4**	435
70	941	2.0	20.7	20000	**F603_20.7 S4 ME4LA4**	**F603_20.7 S4 MX4LA4**	434	**F603_20.7 P132 BE132MA4**	**F603_20.7 P132 BX132MA4**	435
76	869	2.2	19.1	20000	**F603_19.1 S4 ME4LA4**	**F603_19.1 S4 MX4LA4**	434	**F603_19.1 P132 BE132MA4**	**F603_19.1 P132 BX132MA4**	435
77	879	1.2	18.9	5630	**F412_18.9 S4 ME4LA4**	**F412_18.9 S4 MX4LA4**	426	**F412_18.9 P132 BE132MA4**	**F412_18.9 P132 BX132MA4**	427
77	876	1.8	18.8	8520	**F512_18.8 S4 ME4LA4**	**F512_18.8 S4 MX4LA4**	430	**F512_18.8 P132 BE132MA4**	**F512_18.8 P132 BX132MA4**	431
85	797	1.3	17.1	5650	**F412_17.1 S4 ME4LA4**	**F412_17.1 S4 MX4LA4**	426	**F412_17.1 P132 BE132MA4**	**F412_17.1 P132 BX132MA4**	427
93	715	2.7	15.7	20000	**F603_15.7 S4 ME4LA4**	**F603_15.7 S4 MX4LA4**	434	**F603_15.7 P132 BE132MA4**	**F603_15.7 P132 BX132MA4**	435
99	681	1.5	14.6	5630	**F412_14.6 S4 ME4LA4**	**F412_14.6 S4 MX4LA4**	426	**F412_14.6 P132 BE132MA4**	**F412_14.6 P132 BX132MA4**	427
101	660	2.9	14.5	20000	**F603_14.5 S4 ME4LA4**	**F603_14.5 S4 MX4LA4**	434	**F603_14.5 P132 BE132MA4**	**F603_14.5 P132 BX132MA4**	435
104	651	2.2	14.0	8080	**F512_14.0 S4 ME4LA4**	**F512_14.0 S4 MX4LA4**	430	**F512_14.0 P132 BE132MA4**	**F512_14.0 P132 BX132MA4**	431
104	649	0.9	13.9	3980	**F312_13.9 S4 ME4LA4**	**F312_13.9 S4 MX4LA4**	422	**F312_13.9 P132 BE132MA4**	**F312_13.9 P132 BX132MA4**	423
114	580	3.3	12.7	19900	**F603_12.7 S4 ME4LA4**	**F603_12.7 S4 MX4LA4**	434	**F603_12.7 P132 BE132MA4**	**F603_12.7 P132 BX132MA4**	435

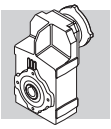

7.5 kW

n_2 min-1	M_2 Nm	S	i	R_{n2} N	IE2	IE3		IE2	IE3	
114	592	1.0	12.7	3880	**F312_12.7 S4 ME4LA4**	**F312_12.7 S4 MX4LA4**	422	**F312_12.7 P132 BE132MA4**	**F312_12.7 P132 BX132MA4**	423
124	536	3.5	11.8	19500	**F603_11.8 S4 ME4LA4**	**F603_11.8 S4 MX4LA4**	434	**F603_11.8 P132 BE132MA4**	**F603_11.8 P132 BX132MA4**	435
131	517	2.6	11.1	7700	**F512_11.1 S4 ME4LA4**	**F512_11.1 S4 MX4LA4**	430	**F512_11.1 P132 BE132MA4**	**F512_11.1 P132 BX132MA4**	431
135	501	1.8	10.8	5490	**F412_10.8 S4 ME4LA4**	**F412_10.8 S4 MX4LA4**	426	**F412_10.8 P132 BE132MA4**	**F412_10.8 P132 BX132MA4**	427
135	500	1.2	10.7	3730	**F312_10.7 S4 ME4LA4**	**F312_10.7 S4 MX4LA4**	422	**F312_10.7 P132 BE132MA4**	**F312_10.7 P132 BX132MA4**	423
159	425	1.6	9.1	5410	**F412_9.1 S4 ME4LA4**	**F412_9.1 S4 MX4LA4**	426	**F412_9.1 P132 BE132MA4**	**F412_9.1 P132 BX132MA4**	427
161	421	2.6	9.1	7290	**F512_9.1 S4 ME4LA4**	**F512_9.1 S4 MX4LA4**	430	**F512_9.1 P132 BE132MA4**	**F512_9.1 P132 BX132MA4**	431
161	420	0.9	9.0	3770	**F312_9.0 S4 ME4LA4**	**F312_9.0 S4 MX4LA4**	422	**F312_9.0 P132 BE132MA4**	**F312_9.0 P132 BX132MA4**	423
177	383	1.0	8.2	3680	**F312_8.2 S4 ME4LA4**	**F312_8.2 S4 MX4LA4**	422	**F312_8.2 P132 BE132MA4**	**F312_8.2 P132 BX132MA4**	423
202	335	2.9	7.2	6900	**F512_7.2 S4 ME4LA4**	**F512_7.2 S4 MX4LA4**	430	**F512_7.2 P132 BE132MA4**	**F512_7.2 P132 BX132MA4**	431
209	323	1.2	6.9	3520	**F312_6.9 S4 ME4LA4**	**F312_6.9 S4 MX4LA4**	422	**F312_6.9 P132 BE132MA4**	**F312_6.9 P132 BX132MA4**	423
216	313	2.0	6.7	5140	**F412_6.7 S4 ME4LA4**	**F412_6.7 S4 MX4LA4**	426	**F412_6.7 P132 BE132MA4**	**F412_6.7 P132 BX132MA4**	427
272	251	2.9	10.8	4880	**F412_10.8 S4 ME4LA2**		426	**F412_10.8 P132 BE132SB2**		427
320	213	2.9	9.1	4730	**F412_9.1 S4 ME4LA2**		426	**F412_9.1 P132 BE132SB2**		427
435	156	3.3	6.7	4390	**F412_6.7 S4 ME4LA2**		426	**F412_6.7 P132 BE132SB2**		427

9.2 kW

n_2 min-1	M_2 Nm	S	i	R_{n2} N	IE2	IE3		IE2	IE3	
5.0	15983	0.9	291.1	55000	**F904_291.1 S4 ME4LB4**		444	**F904_291.1 P132 BE132MB4**	**F904_291.1 P160 BX160MA4**	445
5.4	14753	0.9	268.7	55000	**F904_268.7 S4 ME4LB4**		444	**F904_268.7 P132 BE132MB4**	**F904_268.7 P160 BX160MA4**	445
6.3	12703	1.1	231.4	55000	**F904_231.4 S4 ME4LB4**		444	**F904_231.4 P132 BE132MB4**	**F904_231.4 P160 BX160MA4**	445
6.8	11726	1.2	213.6	55000	**F904_213.6 S4 ME4LB4**		444	**F904_213.6 P132 BE132MB4**	**F904_213.6 P160 BX160MA4**	445
7.5	11014	1.3	194.2	55000	**F903_194.2 S4 ME4LB4**	**F903_194.2 S5 MX5SA4**	444	**F903_194.2 P132 BE132MB4**	**F903_194.2 P160 BX160MA4**	445
8.1	10167	1.4	179.2	55000	**F903_179.2 S4 ME4LB4**	**F903_179.2 S5 MX5SA4**	444	**F903_179.2 P132 BE132MB4**	**F903_179.2 P160 BX160MA4**	445
8.9	9237	1.5	162.8	55000	**F903_162.8 S4 ME4LB4**	**F903_162.8 S5 MX5SA4**	444	**F903_162.8 P132 BE132MB4**	**F903_162.8 P160 BX160MA4**	445
9.0	9090	0.9	160.2	45000	**F803_160.2 S4 ME4LB4**	**F803_160.2 S5 MX5SA4**	441	**F803_160.2 P132 BE132MB4**	**F803_160.2 P160 BX160MA4**	442
9.6	8527	1.6	150.3	55000	**F903_150.3 S4 ME4LB4**	**F903_150.3 S5 MX5SA4**	444	**F903_150.3 P132 BE132MB4**	**F903_150.3 P160 BX160MA4**	445
9.8	8390	1.0	147.9	45000	**F803_147.9 S4 ME4LB4**	**F803_147.9 S5 MX5SA4**	441	**F803_147.9 P132 BE132MB4**	**F803_147.9 P160 BX160MA4**	442
10.6	7791	1.8	137.3	55000	**F903_137.3 S4 ME4LB4**	**F903_137.3 S5 MX5SA4**	444	**F903_137.3 P132 BE132MB4**	**F903_137.3 P160 BX160MA4**	445
10.9	7528	1.1	132.7	45000	**F803_132.7 S4 ME4LB4**	**F803_132.7 S5 MX5SA4**	441	**F803_132.7 P132 BE132MB4**	**F803_132.7 P160 BX160MA4**	442
11.4	7192	1.9	126.8	55000	**F903_126.8 S4 ME4LB4**	**F903_126.8 S5 MX5SA4**	444	**F903_126.8 P132 BE132MB4**	**F903_126.8 P160 BX160MA4**	445
11.8	6949	1.2	122.5	45000	**F803_122.5 S4 ME4LB4**	**F803_122.5 S5 MX5SA4**	441	**F803_122.5 P132 BE132MB4**	**F803_122.5 P160 BX160MA4**	442
12.7	6453	1.2	113.8	45000	**F803_113.8 S4 ME4LB4**	**F803_113.8 S5 MX5SA4**	441	**F803_113.8 P132 BE132MB4**	**F803_113.8 P160 BX160MA4**	442
13.0	6351	2.2	111.9	55000	**F903_111.9 S4 ME4LB4**	**F903_111.9 S5 MX5SA4**	444	**F903_111.9 P132 BE132MB4**	**F903_111.9 P160 BX160MA4**	445
13.8	5957	1.3	105.0	45000	**F803_105.0 S4 ME4LB4**	**F803_105.0 S5 MX5SA4**	441	**F803_105.0 P132 BE132MB4**	**F803_105.0 P160 BX160MA4**	442
14.0	5862	2.4	103.3	55000	**F903_103.3 S4 ME4LB4**	**F903_103.3 S5 MX5SA4**	444	**F903_103.3 P132 BE132MB4**	**F903_103.3 P160 BX160MA4**	445
15.1	5432	2.6	95.8	55000	**F903_95.8 S4 ME4LB4**	**F903_95.8 S5 MX5SA4**	444	**F903_95.8 P132 BE132MB4**	**F903_95.8 P160 BX160MA4**	445
15.7	5248	1.0	92.5	35000	**F703_92.5 S4 ME4LB4**	**F703_92.5 S5 MX5SA4**	438	**F703_92.5 P132 BE132MB4**	**F703_92.5 P160 BX160MA4**	439
15.7	5237	1.5	92.3	45000	**F803_92.3 S4 ME4LB4**	**F803_92.3 S5 MX5SA4**	441	**F803_92.3 P132 BE132MB4**	**F803_92.3 P160 BX160MA4**	442
16.4	5015	2.8	88.4	55000	**F903_88.4 S4 ME4LB4**	**F903_88.4 S5 MX5SA4**	444	**F903_88.4 P132 BE132MB4**	**F903_88.4 P160 BX160MA4**	445
17.0	4844	1.0	85.4	35000	**F703_85.4 S4 ME4LB4**	**F703_85.4 S5 MX5SA4**	438	**F703_85.4 P132 BE132MB4**	**F703_85.4 P160 BX160MA4**	439
17.0	4834	1.7	85.2	45000	**F803_85.2 S4 ME4LB4**	**F803_85.2 S5 MX5SA4**	441	**F803_85.2 P132 BE132MB4**	**F803_85.2 P160 BX160MA4**	442
18.9	4348	3.2	76.7	55000	**F903_76.7 S4 ME4LB4**	**F903_76.7 S5 MX5SA4**	444	**F903_76.7 P132 BE132MB4**	**F903_76.7 P160 BX160MA4**	445
19.0	4326	1.8	76.3	44100	**F803_76.3 S4 ME4LB4**	**F803_76.3 S5 MX5SA4**	441	**F803_76.3 P132 BE132MB4**	**F803_76.3 P160 BX160MA4**	442
19.7	4173	1.2	73.6	35000	**F703_73.6 S4 ME4LB4**	**F703_73.6 S5 MX5SA4**	438	**F703_73.6 P132 BE132MB4**	**F703_73.6 P160 BX160MA4**	439
20.5	4014	3.5	70.8	55000	**F903_70.8 S4 ME4LB4**	**F903_70.8 S5 MX5SA4**	444	**F903_70.8 P132 BE132MB4**	**F903_70.8 P160 BX160MA4**	445
20.6	3993	2.0	70.4	43700	**F803_70.4 S4 ME4LB4**	**F803_70.4 S5 MX5SA4**	441	**F803_70.4 P132 BE132MB4**	**F803_70.4 P160 BX160MA4**	442
21.4	3852	1.3	67.9	34600	**F703_67.9 S4 ME4LB4**	**F703_67.9 S5 MX5SA4**	438	**F703_67.9 P132 BE132MB4**	**F703_67.9 P160 BX160MA4**	439
23.2	3546	1.4	62.5	34200	**F703_62.5 S4 ME4LB4**	**F703_62.5 S5 MX5SA4**	438	**F703_62.5 P132 BE132MB4**	**F703_62.5 P160 BX160MA4**	439
23.6	3487	2.3	61.5	42200	**F803_61.5 S4 ME4LB4**	**F803_61.5 S5 MX5SA4**	441	**F803_61.5 P132 BE132MB4**	**F803_61.5 P160 BX160MA4**	442
25.1	3273	1.5	57.7	33700	**F703_57.7 S4 ME4LB4**	**F703_57.7 S5 MX5SA4**	438	**F703_57.7 P132 BE132MB4**	**F703_57.7 P160 BX160MA4**	439
25.6	3218	2.5	56.7	41400	**F803_56.7 S4 ME4LB4**	**F803_56.7 S5 MX5SA4**	441	**F803_56.7 P132 BE132MB4**	**F803_56.7 P160 BX160MA4**	442
28.0	2940	1.0	51.8	20000	**F603_51.8 S4 ME4LB4**	**F603_51.8 S5 MX5SA4**	434	**F603_51.8 P132 BE132MB4**	**F603_51.8 P160 BX160MA4**	435
29.6	2777	1.8	49.0	32800	**F703_49.0 S4 ME4LB4**	**F703_49.0 S5 MX5SA4**	438	**F703_49.0 P132 BE132MB4**	**F703_49.0 P160 BX160MA4**	439
30	2714	1.1	47.8	20000	**F603_47.8 S4 ME4LB4**	**F603_47.8 S5 MX5SA4**	434	**F603_47.8 P132 BE132MB4**	**F603_47.8 P160 BX160MA4**	435
32	2564	2.0	45.2	32300	**F703_45.2 S4 ME4LB4**	**F703_45.2 S5 MX5SA4**	438	**F703_45.2 P132 BE132MB4**	**F703_45.2 P160 BX160MA4**	439
34	2387	1.2	42.1	20000	**F603_42.1 S4 ME4LB4**	**F603_42.1 S5 MX5SA4**	434	**F603_42.1 P132 BE132MB4**	**F603_42.1 P160 BX160MA4**	435
37	2204	1.3	38.8	20000	**F603_38.8 S4 ME4LB4**	**F603_38.8 S5 MX5SA4**	434	**F603_38.8 P132 BE132MB4**	**F603_38.8 P160 BX160MA4**	435

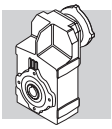

9.2 kW

n_2 min-1	M_2 Nm	S	i	R_{n2} N	IE2	IE3		IE2	IE3	
45	1820	1.6	32.1	20000	**F603_32.1 S4 ME4LB4**	**F603_32.1 S5 MX5SA4**	434	**F603_32.1 P132 BE132MB4**	**F603_32.1 P160 BX160MA4**	435
48	1741	1.0	30.0	8210	**F512_30.0 S4 ME4LB4**	**F512_30.0 S5 MX5SA4**	430	**F512_30.0 P132 BE132MB4**	**F512_30.0 P160 BX160MA4**	431
49	1680	1.7	29.6	20000	**F603_29.6 S4 ME4LB4**	**F603_29.6 S5 MX5SA4**	434	**F603_29.6 P132 BE132MB4**	**F603_29.6 P160 BX160MA4**	435
57	1442	1.3	25.4	20000	**F603_25.4 S4 ME4LB4**	**F603_25.4 S5 MX5SA4**	434	**F603_25.4 P132 BE132MB4**	**F603_25.4 P160 BX160MA4**	435
59	1393	2.9	24.6	28300	**F703_24.6 S4 ME4LB4**	**F703_24.6 S5 MX5SA4**	438	**F703_24.6 P132 BE132MB4**	**F703_24.6 P160 BX160MA4**	439
61	1379	1.2	23.8	8170	**F512_23.8 S4 ME4LB4**	**F512_23.8 S5 MX5SA4**	430	**F512_23.8 P132 BE132MB4**	**F512_23.8 P160 BX160MA4**	431
62	1331	1.4	23.5	20000	**F603_23.5 S4 ME4LB4**	**F603_23.5 S5 MX5SA4**	434	**F603_23.5 P132 BE132MB4**	**F603_23.5 P160 BX160MA4**	435
64	1282	3.4	22.6	27800	**F703_22.6 S4 ME4LB4**	**F703_22.6 S5 MX5SA4**	438	**F703_22.6 P132 BE132MB4**	**F703_22.6 P160 BX160MA4**	439
69	1184	3.4	20.9	27200	**F703_20.9 S4 ME4LB4**	**F703_20.9 S5 MX5SA4**	438	**F703_20.9 P132 BE132MB4**	**F703_20.9 P160 BX160MA4**	439
70	1172	1.6	20.7	20000	**F603_20.7 S4 ME4LB4**	**F603_20.7 S5 MX5SA4**	434	**F603_20.7 P132 BE132MB4**	**F603_20.7 P160 BX160MA4**	435
76	1082	1.8	19.1	20000	**F603_19.1 S4 ME4LB4**	**F603_19.1 S5 MX5SA4**	434	**F603_19.1 P132 BE132MB4**	**F603_19.1 P160 BX160MA4**	435
77	1095	1.0	18.9	4920	**F412_18.9 S4 ME4LB4**		426	**F412_18.9 P132 BE132MB4**		427
77	1091	1.4	18.8	8020	**F512_18.8 S4 ME4LB4**	**F512_18.8 S5 MX5SA4**	430	**F512_18.8 P132 BE132MB4**	**F512_18.8 P160 BX160MA4**	431
85	992	1.1	17.1	5000	**F412_17.1 S4 ME4LB4**		426	**F412_17.1 P132 BE132MB4**		427
92	890	2.1	15.7	20000	**F603_15.7 S4 ME4LB4**	**F603_15.7 S5 MX5SA4**	434	**F603_15.7 P132 BE132MB4**	**F603_15.7 P160 BX160MA4**	435
99	848	1.2	14.6	5070	**F412_14.6 S4 ME4LB4**		426	**F412_14.6 P132 BE132MB4**		427
100	821	2.3	14.5	20000	**F603_14.5 S4 ME4LB4**	**F603_14.5 S5 MX5SA4**	434	**F603_14.5 P132 BE132MB4**	**F603_14.5 P160 BX160MA4**	435
104	810	1.8	14.0	7700	**F512_14.0 S4 ME4LB4**	**F512_14.0 S5 MX5SA4**	430	**F512_14.0 P132 BE132MB4**	**F512_14.0 P160 BX160MA4**	431
114	722	2.6	12.7	19700	**F603_12.7 S4 ME4LB4**	**F603_12.7 S5 MX5SA4**	434	**F603_12.7 P132 BE132MB4**	**F603_12.7 P160 BX160MA4**	435
123	667	2.8	11.8	19300	**F603_11.8 S4 ME4LB4**	**F603_11.8 S5 MX5SA4**	434	**F603_11.8 P132 BE132MB4**	**F603_11.8 P160 BX160MA4**	435
131	644	2.1	11.1	7400	**F512_11.1 S4 ME4LB4**	**F512_11.1 S5 MX5SA4**	430	**F512_11.1 P132 BE132MB4**	**F512_11.1 P160 BX160MA4**	431
135	624	1.4	10.8	5080	**F412_10.8 S4 ME4LB4**		426	**F412_10.8 P132 BE132MB4**		427
135	623	1.0	10.7	3660	**F312_10.7 S4 ME4LB4**		422	**F312_10.7 P132 BE132MB4**		423
149	551	3.5	9.7	18400	**F603_9.7 S4 ME4LB4**	**F603_9.7 S5 MX5SA4**	434	**F603_9.7 P132 BE132MB4**	**F603_9.7 P160 BX160MA4**	435
159	529	1.3	9.1	5080	**F412_9.1 S4 ME4LB4**		426	**F412_9.1 P132 BE132MB4**		427
160	525	2.1	9.1	7040	**F512_9.1 S4 ME4LB4**	**F512_9.1 S5 MX5SA4**	430	**F512_9.1 P132 BE132MB4**	**F512_9.1 P160 BX160MA4**	431
202	417	2.3	7.2	6700	**F512_7.2 S4 ME4LB4**	**F512_7.2 S5 MX5SA4**	430	**F512_7.2 P132 BE132MB4**	**F512_7.2 P160 BX160MA4**	431
209	403	1.0	6.9	3450	**F312_6.9 S4 ME4LB4**		422	**F312_6.9 P132 BE132MB4**		423
216	390	1.6	6.7	4890	**F412_6.7 S4 ME4LB4**		426	**F412_6.7 P132 BE132MB4**		427
263	318	3.4	11.1	6340	**F512_11.1 S4 ME4LB2**		430	**F512_11.1 P132 BE132MB2**		431
271	308	2.4	10.8	4680	**F412_10.8 S4 ME4LB2**		426	**F412_10.8 P132 BE132MB2**		427
320	261	2.3	9.1	4560	**F412_9.1 S4 ME4LB2**		426	**F412_9.1 P132 BE132MB2**		427
323	259	3.5	9.1	5980	**F512_9.1 S4 ME4LB2**		430	**F512_9.1 P132 BE132MB2**		431
434	192	2.7	6.7	4270	**F412_6.7 S4 ME4LB2**		426	**F412_6.7 P132 BE132MB2**		427

11 kW

n_2 min-1	M_2 Nm	S	i	R_{n2} N	IE2	IE3		IE2	IE3	
6.4	14994	0.9	231.4	55000	**F904_231.4 S5 ME5SA4**	**F904_231.4 S5 MX5SB4**	444	**F904_231.4 P160 BE160M4**	**F904_231.4 P160 BX160MB4**	445
6.9	13841	1.0	213.6	55000	**F904_213.6 S5 ME5SA4**	**F904_213.6 S5 MX5SB4**	444	**F904_213.6 P160 BE160M4**	**F904_213.6 P160 BX160MB4**	445
7.6	13001	1.1	194.2	55000	**F903_194.2 S5 ME5SA4**	**F903_194.2 S5 MX5SB4**	444	**F903_194.2 P160 BE160M4**	**F903_194.2 P160 BX160MB4**	445
8.2	12001	1.2	179.2	55000	**F903_179.2 S5 ME5SA4**	**F903_179.2 S5 MX5SB4**	444	**F903_179.2 P160 BE160M4**	**F903_179.2 P160 BX160MB4**	445
9.0	10903	1.3	162.8	55000	**F903_162.8 S5 ME5SA4**	**F903_162.8 S5 MX5SB4**	444	**F903_162.8 P160 BE160M4**	**F903_162.8 P160 BX160MB4**	445
9.8	10064	1.4	150.3	55000	**F903_150.3 S5 ME5SA4**	**F903_150.3 S5 MX5SB4**	444	**F903_150.3 P160 BE160M4**	**F903_150.3 P160 BX160MB4**	445
10.7	9196	1.5	137.3	55000	**F903_137.3 S5 ME5SA4**	**F903_137.3 S5 MX5SB4**	444	**F903_137.3 P160 BE160M4**	**F903_137.3 P160 BX160MB4**	445
11.1	8885	0.9	132.7	45000	**F803_132.7 S5 ME5SA4**	**F803_132.7 S5 MX5SB4**	441	**F803_132.7 P160 BE160M4**	**F803_132.7 P160 BX160MB4**	442
11.6	8489	1.6	126.8	55000	**F903_126.8 S5 ME5SA4**	**F903_126.8 S5 MX5SB4**	444	**F903_126.8 P160 BE160M4**	**F903_126.8 P160 BX160MB4**	445
12.0	8202	1.0	122.5	45000	**F803_122.5 S5 ME5SA4**	**F803_122.5 S5 MX5SB4**	441	**F803_122.5 P160 BE160M4**	**F803_122.5 P160 BX160MB4**	442
12.9	7617	1.1	113.8	45000	**F803_113.8 S5 ME5SA4**	**F803_113.8 S5 MX5SB4**	441	**F803_113.8 P160 BE160M4**	**F803_113.8 P160 BX160MB4**	442
13.1	7496	1.9	111.9	55000	**F903_111.9 S5 ME5SA4**	**F903_111.9 S5 MX5SB4**	444	**F903_111.9 P160 BE160M4**	**F903_111.9 P160 BX160MB4**	445
14.0	7031	1.1	105.0	44400	**F803_105.0 S5 ME5SA4**	**F803_105.0 S5 MX5SB4**	441	**F803_105.0 P160 BE160M4**	**F803_105.0 P160 BX160MB4**	442
14.2	6919	2.0	103.3	55000	**F903_103.3 S5 ME5SA4**	**F903_103.3 S5 MX5SB4**	444	**F903_103.3 P160 BE160M4**	**F903_103.3 P160 BX160MB4**	445
15.4	6412	2.2	95.8	55000	**F903_95.8 S5 ME5SA4**	**F903_95.8 S5 MX5SB4**	444	**F903_95.8 P160 BE160M4**	**F903_95.8 P160 BX160MB4**	445
15.9	6181	1.3	92.3	44100	**F803_92.3 S5 ME5SA4**	**F803_92.3 S5 MX5SB4**	441	**F803_92.3 P160 BE160M4**	**F803_92.3 P160 BX160MB4**	442
16.6	5919	2.4	88.4	55000	**F903_88.4 S5 ME5SA4**	**F903_88.4 S5 MX5SB4**	444	**F903_88.4 P160 BE160M4**	**F903_88.4 P160 BX160MB4**	445
17.3	5705	1.4	85.2	44000	**F803_85.2 S5 ME5SA4**	**F803_85.2 S5 MX5SB4**	441	**F803_85.2 P160 BE160M4**	**F803_85.2 P160 BX160MB4**	442
19.2	5132	2.7	76.7	55000	**F903_76.7 S5 ME5SA4**	**F903_76.7 S5 MX5SB4**	444	**F903_76.7 P160 BE160M4**	**F903_76.7 P160 BX160MB4**	445
19.3	5106	1.6	76.3	42800	**F803_76.3 S5 ME5SA4**	**F803_76.3 S5 MX5SB4**	441	**F803_76.3 P160 BE160M4**	**F803_76.3 P160 BX160MB4**	442
20.0	4925	1.0	73.6	33500	**F703_73.6 S5 ME5SA4**	**F703_73.6 S5 MX5SB4**	438	**F703_73.6 P160 BE160M4**	**F703_73.6 P160 BX160MB4**	439

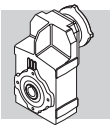

11 kW

n_2 min-1	M_2 Nm	S	i	R_{n2} N	IE2	IE3		IE2	IE3	
20.8	4738	3.0	70.8	55000	**F903_70.8 S5 ME5SA4**	**F903_70.8 S5 MX5SB4**	444	**F903_70.8 P160 BE160M4**	**F903_70.8 P160 BX160MB4**	445
20.9	4713	1.7	70.4	42500	**F803_70.4 S5 ME5SA4**	**F803_70.4 S5 MX5SB4**	441	**F803_70.4 P160 BE160M4**	**F803_70.4 P160 BX160MB4**	442
21.6	4547	1.1	67.9	33100	**F703_67.9 S5 ME5SA4**	**F703_67.9 S5 MX5SB4**	438	**F703_67.9 P160 BE160M4**	**F703_67.9 P160 BX160MB4**	439
23.5	4185	1.2	62.5	32900	**F703_62.5 S5 ME5SA4**	**F703_62.5 S5 MX5SB4**	438	**F703_62.5 P160 BE160M4**	**F703_62.5 P160 BX160MB4**	439
23.7	4158	3.4	62.1	55000				**F903_62.1 P160 BE160M4**	**F903_62.1 P160 BX160MB4**	445
23.9	4115	1.9	61.5	41100	**F803_61.5 S5 ME5SA4**	**F803_61.5 S5 MX5SB4**	441	**F803_61.5 P160 BE160M4**	**F803_61.5 P160 BX160MB4**	442
25.5	3863	1.3	57.7	32500	**F703_57.7 S5 ME5SA4**	**F703_57.7 S5 MX5SB4**	438	**F703_57.7 P160 BE160M4**	**F703_57.7 P160 BX160MB4**	439
25.9	3799	2.1	56.7	40800	**F803_56.7 S5 ME5SA4**	**F803_56.7 S5 MX5SB4**	441	**F803_56.7 P160 BE160M4**	**F803_56.7 P160 BX160MB4**	442
29.9	3288	2.4	49.1	39100				**F803_49.1 P160 BE160M4**	**F803_49.1 P160 BX160MB4**	442
30	3278	1.5	49.0	31800	**F703_49.0 S5 ME5SA4**	**F703_49.0 S5 MX5SB4**	438	**F703_49.0 P160 BE160M4**	**F703_49.0 P160 BX160MB4**	439
31	3203	0.9	47.8	20000	**F603_47.8 S5 ME5SA4**	**F603_47.8 S5 MX5SB4**	434	**F603_47.8 P160 BE160M4**	**F603_47.8 P160 BX160MB4**	435
32	3035	2.6	45.3	38900				**F803_45.3 P160 BE160M4**	**F803_45.3 P160 BX160MB4**	442
33	3026	1.7	45.2	31300	**F703_45.2 S5 ME5SA4**	**F703_45.2 S5 MX5SB4**	438	**F703_45.2 P160 BE160M4**	**F703_45.2 P160 BX160MB4**	439
35	2818	1.0	42.1	20000	**F603_42.1 S5 ME5SA4**	**F603_42.1 S5 MX5SB4**	434	**F603_42.1 P160 BE160M4**	**F603_42.1 P160 BX160MB4**	435
38	2611	3.1	39.0	36400				**F803_39.0 P160 BE160M4**	**F803_39.0 P160 BX160MB4**	442
38	2601	1.1	38.8	20000	**F603_38.8 S5 ME5SA4**	**F603_38.8 S5 MX5SB4**	434	**F603_38.8 P160 BE160M4**	**F603_38.8 P160 BX160MB4**	435
38	2571	1.9	38.4	30200				**F703_38.4 P160 BE160M4**	**F703_38.4 P160 BX160MB4**	439
41	2411	3.3	36.0	35600				**F803_36.0 P160 BE160M4**	**F803_36.0 P160 BX160MB4**	442
41	2373	2.1	35.4	29600				**F703_35.4 P160 BE160M4**	**F703_35.4 P160 BX160MB4**	439
46	2148	1.3	32.1	20000	**F603_32.1 S5 ME5SA4**	**F603_32.1 S5 MX5SB4**	434	**F603_32.1 P160 BE160M4**	**F603_32.1 P160 BX160MB4**	435
49	2009	2.5	30.0	29000				**F703_30.0 P160 BE160M4**	**F703_30.0 P160 BX160MB4**	439
50	1983	1.5	29.6	20000	**F603_29.6 S5 ME5SA4**	**F603_29.6 S5 MX5SB4**	434	**F603_29.6 P160 BE160M4**	**F603_29.6 P160 BX160MB4**	435
53	1854	2.5	27.7	28300				**F703_27.7 P160 BE160M4**	**F703_27.7 P160 BX160MB4**	439
58	1702	1.1	25.4	20000	**F603_25.4 S5 ME5SA4**	**F603_25.4 S5 MX5SB4**	434	**F603_25.4 P160 BE160M4**	**F603_25.4 P160 BX160MB4**	435
60	1644	2.4	24.6	27800	**F703_24.6 S5 ME5SA4**	**F703_24.6 S5 MX5SB4**	438	**F703_24.6 P160 BE160M4**	**F703_24.6 P160 BX160MB4**	439
62	1628	1.0	23.8	7500	**F512_23.8 S5 ME5SA4**	**F512_23.8 S5 MX5SB4**	430	**F512_23.8 P160 BE160M4**	**F512_23.8 P160 BX160MB4**	431
63	1571	1.2	23.5	20000	**F603_23.5 S5 ME5SA4**	**F603_23.5 S5 MX5SB4**	434	**F603_23.5 P160 BE160M4**	**F603_23.5 P160 BX160MB4**	435
65	1514	2.9	22.6	27300	**F703_22.6 S5 ME5SA4**	**F703_22.6 S5 MX5SB4**	438	**F703_22.6 P160 BE160M4**	**F703_22.6 P160 BX160MB4**	439
70	1397	2.9	20.9	26800	**F703_20.9 S5 ME5SA4**	**F703_20.9 S5 MX5SB4**	438	**F703_20.9 P160 BE160M4**	**F703_20.9 P160 BX160MB4**	439
71	1383	1.4	20.7	20000	**F603_20.7 S5 ME5SA4**	**F603_20.7 S5 MX5SB4**	434	**F603_20.7 P160 BE160M4**	**F603_20.7 P160 BX160MB4**	435
77	1277	1.5	19.1	20000	**F603_19.1 S5 ME5SA4**	**F603_19.1 S5 MX5SB4**	434	**F603_19.1 P160 BE160M4**	**F603_19.1 P160 BX160MB4**	435
78	1287	1.2	18.8	7490	**F512_18.8 S5 ME5SA4**	**F512_18.8 S5 MX5SB4**	430	**F512_18.8 P160 BE160M4**	**F512_18.8 P160 BX160MB4**	431
94	1050	1.8	15.7	20000	**F603_15.7 S5 ME5SA4**	**F603_15.7 S5 MX5SB4**	434	**F603_15.7 P160 BE160M4**	**F603_15.7 P160 BX160MB4**	435
102	969	2.0	14.5	20000	**F603_14.5 S5 ME5SA4**	**F603_14.5 S5 MX5SB4**	434	**F603_14.5 P160 BE160M4**	**F603_14.5 P160 BX160MB4**	435
105	956	1.5	14.0	7310	**F512_14.0 S5 ME5SA4**	**F512_14.0 S5 MX5SB4**	430	**F512_14.0 P160 BE160M4**	**F512_14.0 P160 BX160MB4**	431
115	853	2.2	12.7	19400	**F603_12.7 S5 ME5SA4**	**F603_12.7 S5 MX5SB4**	434	**F603_12.7 P160 BE160M4**	**F603_12.7 P160 BX160MB4**	435
125	787	2.4	11.8	19000	**F603_11.8 S5 ME5SA4**	**F603_11.8 S5 MX5SB4**	434	**F603_11.8 P160 BE160M4**	**F603_11.8 P160 BX160MB4**	435
132	760	1.8	11.1	7090	**F512_11.1 S5 ME5SA4**	**F512_11.1 S5 MX5SB4**	430	**F512_11.1 P160 BE160M4**	**F512_11.1 P160 BX160MB4**	431
151	650	2.9	9.7	18200	**F603_9.7 S5 ME5SA4**	**F603_9.7 S5 MX5SB4**	434	**F603_9.7 P160 BE160M4**	**F603_9.7 P160 BX160MB4**	435
162	619	1.8	9.1	6770	**F512_9.1 S5 ME5SA4**	**F512_9.1 S5 MX5SB4**	430	**F512_9.1 P160 BE160M4**	**F512_9.1 P160 BX160MB4**	431
164	600	3.2	9.0	17800	**F603_9.0 S5 ME5SA4**	**F603_9.0 S5 MX5SB4**	434	**F603_9.0 P160 BE160M4**	**F603_9.0 P160 BX160MB4**	435
204	492	2.0	7.2	6490	**F512_7.2 S5 ME5SA4**	**F512_7.2 S5 MX5SB4**	430	**F512_7.2 P160 BE160M4**	**F512_7.2 P160 BX160MB4**	431
265	377	2.9	11.1	6170	**F512_11.1 S5 ME5SA2**		430	**F512_11.1 P160 BE160MA2**		431
325	307	2.9	9.1	5840	**F512_9.1 S5 ME5SA2**		430	**F512_9.1 P160 BE160MA2**		431
409	244	3.3	7.2	5510	**F512_7.2 S5 ME5SA2**		430	**F512_7.2 P160 BE160MA2**		431

15 kW

n_2 min-1	M_2 Nm	S	i	R_{n2} N	IE2	IE3		IE2	IE3	
9.0	14840	0.9	162.8	55000	**F903_162.8 S5 ME5LA4**	**F903_162.8 S5 MX5LA4**	444	**F903_162.8 P160 BE160L4**	**F903_162.8 P160 BX160L4**	445
9.8	13699	1.0	150.3	55000	**F903_150.3 S5 ME5LA4**	**F903_150.3 S5 MX5LA4**	444	**F903_150.3 P160 BE160L4**	**F903_150.3 P160 BX160L4**	445
10.7	12517	1.1	137.3	55000	**F903_137.3 S5 ME5LA4**	**F903_137.3 S5 MX5LA4**	444	**F903_137.3 P160 BE160L4**	**F903_137.3 P160 BX160L4**	445
11.6	11554	1.2	126.8	55000	**F903_126.8 S5 ME5LA4**	**F903_126.8 S5 MX5LA4**	444	**F903_126.8 P160 BE160L4**	**F903_126.8 P160 BX160L4**	445
13.1	10203	1.4	111.9	55000	**F903_111.9 S5 ME5LA4**	**F903_111.9 S5 MX5LA4**	444	**F903_111.9 P160 BE160L4**	**F903_111.9 P160 BX160L4**	445
14.2	9418	1.5	103.3	55000	**F903_103.3 S5 ME5LA4**	**F903_103.3 S5 MX5LA4**	444	**F903_103.3 P160 BE160L4**	**F903_103.3 P160 BX160L4**	445
15.4	8728	1.6	95.8	55000	**F903_95.8 S5 ME5LA4**	**F903_95.8 S5 MX5LA4**	444	**F903_95.8 P160 BE160L4**	**F903_95.8 P160 BX160L4**	445
15.9	8413	1.0	92.3	41300	**F803_92.3 S5 ME5LA4**	**F803_92.3 S5 MX5LA4**	441	**F803_92.3 P160 BE160L4**	**F803_92.3 P160 BX160L4**	442
16.6	8056	1.7	88.4	55000	**F903_88.4 S5 ME5LA4**	**F903_88.4 S5 MX5LA4**	444	**F903_88.4 P160 BE160L4**	**F903_88.4 P160 BX160L4**	445
17.3	7766	1.0	85.2	40800	**F803_85.2 S5 ME5LA4**	**F803_85.2 S5 MX5LA4**	441	**F803_85.2 P160 BE160L4**	**F803_85.2 P160 BX160L4**	442
19.2	6986	2.0	76.7	55000	**F903_76.7 S5 ME5LA4**	**F903_76.7 S5 MX5LA4**	444	**F903_76.7 P160 BE160L4**	**F903_76.7 P160 BX160L4**	445
19.3	6949	1.2	76.3	40500	**F803_76.3 S5 ME5LA4**	**F803_76.3 S5 MX5LA4**	441	**F803_76.3 P160 BE160L4**	**F803_76.3 P160 BX160L4**	442
20.8	6449	2.2	70.8	55000	**F903_70.8 S5 ME5LA4**	**F903_70.8 S5 MX5LA4**	444	**F903_70.8 P160 BE160L4**	**F903_70.8 P160 BX160L4**	445

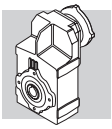

15 kW

n_2 min-1	M_2 Nm	S	i	R_{n2} N	IE2	IE3		IEC IE2	IEC IE3	
20.9	6415	1.2	70.4	39900	F803_70.4 S5 ME5LA4	F803_70.4 S5 MX5LA4	441	F803_70.4 P160 BE160L4	F803_70.4 P160 BX160L4	442
23.5	5696	0.9	62.5	31300	F703_62.5 S5 ME5LA4	F703_62.5 S5 MX5LA4	438	F703_62.5 P160 BE160L4	F703_62.5 P160 BX160L4	439
23.7	5660	2.5	62.1	55000				F903_62.1 P160 BE160L4	F903_62.1 P160 BX160L4	445
23.9	5601	1.4	61.5	38700	F803_61.5 S5 ME5LA4	F803_61.5 S5 MX5LA4	441	F803_61.5 P160 BE160L4	F803_61.5 P160 BX160L4	442
25.5	5258	1.0	57.7	29700	F703_57.7 S5 ME5LA4	F703_57.7 S5 MX5LA4	438	F703_57.7 P160 BE160L4	F703_57.7 P160 BX160L4	439
25.6	5224	2.7	57.3	55000				F903_57.3 P160 BE160L4	F903_57.3 P160 BX160L4	445
25.9	5170	1.5	56.7	38600	F803_56.7 S5 ME5LA4	F803_56.7 S5 MX5LA4	441	F803_56.7 P160 BE160L4	F803_56.7 P160 BX160L4	442
29.5	4548	3.1	49.9	54400				F903_49.9 P160 BE160L4	F903_49.9 P160 BX160L4	445
29.9	4476	1.8	49.1	37800				F803_49.1 P160 BE160L4	F803_49.1 P160 BX160L4	442
30	4462	1.1	49.0	29400	F703_49.0 S5 ME5LA4	F703_49.0 S5 MX5LA4	438	F703_49.0 P160 BE160L4	F703_49.0 P160 BX160L4	439
32	4198	3.3	46.1	53500				F903_46.1 P160 BE160L4	F903_46.1 P160 BX160L4	445
32	4131	1.9	45.3	37200				F803_45.3 P160 BE160L4	F803_45.3 P160 BX160L4	442
33	4119	1.2	45.2	29100	F703_45.2 S5 ME5LA4	F703_45.2 S5 MX5LA4	438	F703_45.2 P160 BE160L4	F703_45.2 P160 BX160L4	439
38	3554	2.3	39.0	35800				F803_39.0 P160 BE160L4	F803_39.0 P160 BX160L4	442
38	3499	1.4	38.4	28600				F703_38.4 P160 BE160L4	F703_38.4 P160 BX160L4	439
41	3281	2.4	36.0	35200				F803_36.0 P160 BE160L4	F803_36.0 P160 BX160L4	442
41	3230	1.5	35.4	28200				F703_35.4 P160 BE160L4	F703_35.4 P160 BX160L4	439
46	2924	1.0	32.1	20000	F603_32.1 S5 ME5LA4	F603_32.1 S5 MX5LA4	434	F603_32.1 P160 BE160L4	F603_32.1 P160 BX160L4	435
49	2734	1.8	30.0	27700				F703_30.0 P160 BE160L4	F703_30.0 P160 BX160L4	439
50	2699	1.1	29.6	20000	F603_29.6 S5 ME5LA4	F603_29.6 S5 MX5LA4	434	F603_29.6 P160 BE160L4	F603_29.6 P160 BX160L4	435
53	2524	1.9	27.7	27100				F703_27.7 P160 BE160L4	F703_27.7 P160 BX160L4	439
58	2299	2.7	25.2	32900	F803_25.2 S5 ME5LA4	F803_25.2 S5 MX5LA4	441	F803_25.2 P160 BE160L4	F803_25.2 P160 BX160L4	442
60	2238	1.8	24.6	26500	F703_24.6 S5 ME5LA4	F703_24.6 S5 MX5LA4	438	F703_24.6 P160 BE160L4	F703_24.6 P160 BX160L4	439
63	2138	0.9	23.5	20000	F603_23.5 S5 ME5LA4	F603_23.5 S5 MX5LA4	434	F603_23.5 P160 BE160L4	F603_23.5 P160 BX160L4	435
65	2060	2.1	22.6	26200	F703_22.6 S5 ME5LA4	F703_22.6 S5 MX5LA4	438	F703_22.6 P160 BE160L4	F703_22.6 P160 BX160L4	439
67	2008	3.3	22.0	31900	F803_22.0 S5 ME5LA4	F803_22.0 S5 MX5LA4	441	F803_22.0 P160 BE160L4	F803_22.0 P160 BX160L4	442
70	1902	2.1	20.9	25700	F703_20.9 S5 ME5LA4	F703_20.9 S5 MX5LA4	438	F703_20.9 P160 BE160L4	F703_20.9 P160 BX160L4	439
71	1883	1.0	20.7	20000	F603_20.7 S5 ME5LA4	F603_20.7 S5 MX5LA4	434	F603_20.7 P160 BE160L4	F603_20.7 P160 BX160L4	435
72	1853	3.3	20.3	31300	F803_20.3 S5 ME5LA4	F803_20.3 S5 MX5LA4	441	F803_20.3 P160 BE160L4	F803_20.3 P160 BX160L4	442
77	1738	1.1	19.1	20000	F603_19.1 S5 ME5LA4	F603_19.1 S5 MX5LA4	434	F603_19.1 P160 BE160L4	F603_19.1 P160 BX160L4	435
78	1752	0.9	18.8	6800	F512_18.8 S5 ME5LA4	F512_18.8 S5 MX5LA4	430	F512_18.8 P160 BE160L4	F512_18.8 P160 BX160L4	431
83	1614	2.7	17.7	24900	F703_17.7 S5 ME5LA4	F703_17.7 S5 MX5LA4	438	F703_17.7 P160 BE160L4	F703_17.7 P160 BX160L4	439
90	1490	2.7	16.3	24400	F703_16.3 S5 ME5LA4	F703_16.3 S5 MX5LA4	438	F703_16.3 P160 BE160L4	F703_16.3 P160 BX160L4	439
94	1429	1.3	15.7	19600	F603_15.7 S5 ME5LA4	F603_15.7 S5 MX5LA4	434	F603_15.7 P160 BE160L4	F603_15.7 P160 BX160L4	435
102	1319	1.4	14.5	19200	F603_14.5 S5 ME5LA4	F603_14.5 S5 MX5LA4	434	F603_14.5 P160 BE160L4	F603_14.5 P160 BX160L4	435
105	1301	1.1	14.0	6450	F512_14.0 S5 ME5LA4	F512_14.0 S5 MX5LA4	430	F512_14.0 P160 BE160L4	F512_14.0 P160 BX160L4	431
106	1266	3.1	13.9	23600	F703_13.9 S5 ME5LA4	F703_13.9 S5 MX5LA4	438	F703_13.9 P160 BE160L4	F703_13.9 P160 BX160L4	439
115	1168	3.1	12.8	23100	F703_12.8 S5 ME5LA4	F703_12.8 S5 MX5LA4	438	F703_12.8 P160 BE160L4	F703_12.8 P160 BX160L4	439
115	1160	1.6	12.7	18800	F603_12.7 S5 ME5LA4	F603_12.7 S5 MX5LA4	434	F603_12.7 P160 BE160L4	F603_12.7 P160 BX160L4	435
125	1071	1.8	11.8	18400	F603_11.8 S5 ME5LA4	F603_11.8 S5 MX5LA4	434	F603_11.8 P160 BE160L4	F603_11.8 P160 BX160L4	435
132	1034	1.3	11.1	6000	F512_11.1 S5 ME5LA4	F512_11.1 S5 MX5LA4	430	F512_11.1 P160 BE160L4	F512_11.1 P160 BX160L4	431
135	989	3.5	10.9	22300	F703_10.9 S5 ME5LA4	F703_10.9 S5 MX5LA4	438	F703_10.9 P160 BE160L4	F703_10.9 P160 BX160L4	439
147	913	3.5	10.0	21800	F703_10.0 S5 ME5LA4	F703_10.0 S5 MX5LA4	438	F703_10.0 P160 BE160L4	F703_10.0 P160 BX160L4	439
151	885	2.1	9.7	17700	F603_9.7 S5 ME5LA4	F603_9.7 S5 MX5LA4	434	F603_9.7 P160 BE160L4	F603_9.7 P160 BX160L4	435
162	843	1.3	9.1	5800	F512_9.1 S5 ME5LA4	F512_9.1 S5 MX5LA4	430	F512_9.1 P160 BE160L4	F512_9.1 P160 BX160L4	431
164	817	2.3	9.0	17300	F603_9.0 S5 ME5LA4	F603_9.0 S5 MX5LA4	434	F603_9.0 P160 BE160L4	F603_9.0 P160 BX160L4	435
204	670	1.5	7.2	5640	F512_7.2 S5 ME5LA4	F512_7.2 S5 MX5LA4	430	F512_7.2 P160 BE160L4	F512_7.2 P160 BX160L4	431

18.5 kW

n_2 min-1	M_2 Nm	S	i	R_{n2} N	IE2	IE3		IEC IE2	IEC IE3	
10.7	15327	0.9	137.3	55000				F903_137.3 P180 BE180M4	F903_137.3 P180 BX180M4	445
11.6	14148	1.0	126.8	55000				F903_126.8 P180 BE180M4	F903_126.8 P180 BX180M4	445
13.1	12493	1.1	111.9	55000				F903_111.9 P180 BE180M4	F903_111.9 P180 BX180M4	445
14.2	11532	1.2	103.3	55000				F903_103.3 P180 BE180M4	F903_103.3 P180 BX180M4	445
15.4	10687	1.3	95.8	55000				F903_95.8 P180 BE180M4	F903_95.8 P180 BX180M4	445
16.6	9865	1.4	88.4	55000				F903_88.4 P180 BE180M4	F903_88.4 P180 BX180M4	445
19.2	8554	1.6	76.7	55000				F903_76.7 P180 BE180M4	F903_76.7 P180 BX180M4	445
19.3	8510	0.9	76.3	38100				F803_76.3 P180 BE180M4	F803_76.3 P180 BX180M4	442
20.8	7896	1.8	70.8	55000				F903_70.8 P180 BE180M4	F903_70.8 P180 BX180M4	445

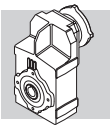

18.5 kW

n_2 min-1	M_2 Nm	S	i	R_{n2} N	IE2	IE3		IEC IE2	IEC IE3	
20.9	7855	1.0	70.4	37600				F803_70.4 P180 BE180M4	F803_70.4 P180 BX180M4	442
23.7	6930	2.0	62.1	55000				F903_62.1 P180 BE180M4	F903_62.1 P180 BX180M4	445
23.9	6859	1.2	61.5	37400				F803_61.5 P180 BE180M4	F803_61.5 P180 BX180M4	442
25.6	6397	2.2	57.3	55000				F903_57.3 P180 BE180M4	F903_57.3 P180 BX180M4	445
25.9	6331	1.3	56.7	36800				F803_56.7 P180 BE180M4	F803_56.7 P180 BX180M4	442
29.5	5568	2.5	49.9	55000				F903_49.9 P180 BE180M4	F903_49.9 P180 BX180M4	445
29.9	5480	1.5	49.1	35800				F803_49.1 P180 BE180M4	F803_49.1 P180 BX180M4	442
30	5464	0.9	49.0	27400				F703_49.0 P180 BE180M4	F703_49.0 P180 BX180M4	439
32	5140	2.7	46.1	55000				F903_46.1 P180 BE180M4	F903_46.1 P180 BX180M4	445
32	5059	1.6	45.3	35700				F803_45.3 P180 BE180M4	F803_45.3 P180 BX180M4	442
33	5043	1.0	45.2	27200				F703_45.2 P180 BE180M4	F703_45.2 P180 BX180M4	439
36	4520	3.1	40.5	52300				F903_40.5 P180 BE180M4	F903_40.5 P180 BX180M4	445
38	4352	1.8	39.0	35000				F803_39.0 P180 BE180M4	F803_39.0 P180 BX180M4	442
38	4285	1.2	38.4	27000				F703_38.4 P180 BE180M4	F703_38.4 P180 BX180M4	439
39	4172	3.2	37.4	51400				F903_37.4 P180 BE180M4	F903_37.4 P180 BX180M4	445
41	4018	2.0	36.0	34400				F803_36.0 P180 BE180M4	F803_36.0 P180 BX180M4	442
41	3955	1.3	35.4	26700				F703_35.4 P180 BE180M4	F703_35.4 P180 BX180M4	439
47	3488	2.3	31.3	33400				F803_31.3 P180 BE180M4	F803_31.3 P180 BX180M4	442
49	3348	1.5	30.0	26500				F703_30.0 P180 BE180M4	F703_30.0 P180 BX180M4	439
51	3219	2.5	28.8	33000				F803_28.8 P180 BE180M4	F803_28.8 P180 BX180M4	442
53	3090	1.5	27.7	26000				F703_27.7 P180 BE180M4	F703_27.7 P180 BX180M4	439
58	2815	2.2	25.2	32100				F803_25.2 P180 BE180M4	F803_25.2 P180 BX180M4	442
60	2741	1.5	24.6	25500				F703_24.6 P180 BE180M4	F703_24.6 P180 BX180M4	439
65	2523	1.7	22.6	25200				F703_22.6 P180 BE180M4	F703_22.6 P180 BX180M4	439
67	2458	2.7	22.0	31300				F803_22.0 P180 BE180M4	F803_22.0 P180 BX180M4	442
70	2329	1.7	20.9	24900				F703_20.9 P180 BE180M4	F703_20.9 P180 BX180M4	439
72	2269	2.7	20.3	30600				F803_20.3 P180 BE180M4	F803_20.3 P180 BX180M4	442
77	2128	0.9	19.1	19200				F603_19.1 P180 BE180M4	F603_19.1 P180 BX180M4	435
83	1976	2.2	17.7	24200				F703_17.7 P180 BE180M4	F703_17.7 P180 BX180M4	439
84	1964	3.4	17.6	29700				F803_17.6 P180 BE180M4	F803_17.6 P180 BX180M4	442
90	1824	2.2	16.3	23800				F703_16.3 P180 BE180M4	F703_16.3 P180 BX180M4	439
90	1813	3.4	16.2	29100				F803_16.2 P180 BE180M4	F803_16.2 P180 BX180M4	442
94	1750	1.1	15.7	18700				F603_15.7 P180 BE180M4	F603_15.7 P180 BX180M4	435
102	1615	1.2	14.5	18600				F603_14.5 P180 BE180M4	F603_14.5 P180 BX180M4	435
106	1550	2.5	13.9	23000				F703_13.9 P180 BE180M4	F703_13.9 P180 BX180M4	439
115	1430	2.5	12.8	22600				F703_12.8 P180 BE180M4	F703_12.8 P180 BX180M4	439
115	1421	1.3	12.7	18300				F603_12.7 P180 BE180M4	F603_12.7 P180 BX180M4	435
125	1312	1.4	11.8	17900				F603_11.8 P180 BE180M4	F603_11.8 P180 BX180M4	435
132	1267	1.1	11.1	5800				F512_11.1 P180 BE180M4	F512_11.1 P180 BX180M4	431
135	1211	2.8	10.9	21800				F703_10.9 P180 BE180M4	F703_10.9 P180 BX180M4	439
147	1118	2.9	10.0	21400				F703_10.0 P180 BE180M4	F703_10.0 P180 BX180M4	439
151	1083	1.8	9.7	17300				F603_9.7 P180 BE180M4	F603_9.7 P180 BX180M4	435
162	1032	1.1	9.1	5630				F512_9.1 P180 BE180M4	F512_9.1 P180 BX180M4	431
164	1000	1.9	9.0	16900				F603_9.0 P180 BE180M4	F603_9.0 P180 BX180M4	435
204	820	1.2	7.2	5400				F512_7.2 P180 BE180M4	F512_7.2 P180 BX180M4	431

22 kW

n_2 min-1	M_2 Nm	S	i	R_{n2} N	IE2	IE3		IEC IE2	IEC IE3	
13.1	14888	0.9	111.9	55000				F903_111.9 P180 BE180L4	F903_111.9 P180 BX180L4	445
14.2	13743	1.0	103.3	55000				F903_103.3 P180 BE180L4	F903_103.3 P180 BX180L4	445
15.4	12735	1.1	95.8	55000				F903_95.8 P180 BE180L4	F903_95.8 P180 BX180L4	445
16.6	11755	1.2	88.4	55000				F903_88.4 P180 BE180L4	F903_88.4 P180 BX180L4	445
19.2	10194	1.4	76.7	55000				F903_76.7 P180 BE180L4	F903_76.7 P180 BX180L4	445
20.8	9410	1.5	70.8	55000				F903_70.8 P180 BE180L4	F903_70.8 P180 BX180L4	445
23.7	8259	1.7	62.1	55000				F903_62.1 P180 BE180L4	F903_62.1 P180 BX180L4	445
23.9	8173	1.0	61.5	35400				F803_61.5 P180 BE180L4	F803_61.5 P180 BX180L4	442
25.6	7623	1.8	57.3	55000				F903_57.3 P180 BE180L4	F903_57.3 P180 BX180L4	445
25.9	7545	1.1	56.7	35000				F803_56.7 P180 BE180L4	F803_56.7 P180 BX180L4	442

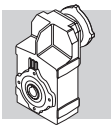

22 kW

n_2 min-1	M_2 Nm	S	i	R_{n2} N	IE2	IE3		IE2	IE3	
29.5	6636	2.1	49.9	54400				F903_49.9 P180 BE180L4	F903_49.9 P180 BX180L4	445
29.9	6531	1.2	49.1	34100				F803_49.1 P180 BE180L4	F803_49.1 P180 BX180L4	442
32	6125	2.3	46.1	53500				F903_46.1 P180 BE180L4	F903_46.1 P180 BX180L4	445
32	6028	1.3	45.3	34300				F803_45.3 P180 BE180L4	F803_45.3 P180 BX180L4	442
36	5386	2.6	40.5	52300				F903_40.5 P180 BE180L4	F903_40.5 P180 BX180L4	445
38	5187	1.5	39.0	33300				F803_39.0 P180 BE180L4	F803_39.0 P180 BX180L4	442
38	5106	1.0	38.4	25400				F703_38.4 P180 BE180L4	F703_38.4 P180 BX180L4	439
39	4972	2.7	37.4	51400				F903_37.4 P180 BE180L4	F903_37.4 P180 BX180L4	445
41	4788	1.7	36.0	33200				F803_36.0 P180 BE180L4	F803_36.0 P180 BX180L4	442
41	4713	1.1	35.4	25300				F703_35.4 P180 BE180L4	F703_35.4 P180 BX180L4	439
47	4156	1.9	31.3	32600				F803_31.3 P180 BE180L4	F803_31.3 P180 BX180L4	442
47	4122	3.2	31.0	49500				F903_31.0 P180 BE180L4	F903_31.0 P180 BX180L4	445
49	3990	1.3	30.0	25100				F703_30.0 P180 BE180L4	F703_30.0 P180 BX180L4	439
51	3836	2.1	28.8	32000				F803_28.8 P180 BE180L4	F803_28.8 P180 BX180L4	442
51	3805	3.2	28.6	48600				F903_28.6 P180 BE180L4	F903_28.6 P180 BX180L4	445
53	3683	1.3	27.7	24800				F703_27.7 P180 BE180L4	F703_27.7 P180 BX180L4	439
58	3355	1.8	25.2	31300				F803_25.2 P180 BE180L4	F803_25.2 P180 BX180L4	442
60	3266	1.2	24.6	24500				F703_24.6 P180 BE180L4	F703_24.6 P180 BX180L4	439
65	3006	1.4	22.6	24300				F703_22.6 P180 BE180L4	F703_22.6 P180 BX180L4	439
67	2929	2.3	22.0	30200				F803_22.0 P180 BE180L4	F803_22.0 P180 BX180L4	442
70	2775	1.4	20.9	24000				F703_20.9 P180 BE180L4	F703_20.9 P180 BX180L4	439
72	2704	2.3	20.3	29900				F803_20.3 P180 BE180L4	F803_20.3 P180 BX180L4	442
83	2355	1.9	17.7	23400				F703_17.7 P180 BE180L4	F703_17.7 P180 BX180L4	439
84	2341	2.9	17.6	29100				F803_17.6 P180 BE180L4	F803_17.6 P180 BX180L4	442
90	2174	1.8	16.3	23100				F703_16.3 P180 BE180L4	F703_16.3 P180 BX180L4	439
90	2161	2.9	16.2	28500				F803_16.2 P180 BE180L4	F803_16.2 P180 BX180L4	442
94	2085	0.9	15.7	18200				F603_15.7 P180 BE180L4	F603_15.7 P180 BX180L4	435
102	1925	1.0	14.5	18000				F603_14.5 P180 BE180L4	F603_14.5 P180 BX180L4	435
106	1847	2.1	13.9	22400				F703_13.9 P180 BE180L4	F703_13.9 P180 BX180L4	439
115	1705	2.1	12.8	22100				F703_12.8 P180 BE180L4	F703_12.8 P180 BX180L4	439
115	1693	1.1	12.7	17700				F603_12.7 P180 BE180L4	F603_12.7 P180 BX180L4	435
125	1563	1.2	11.8	17400				F603_11.8 P180 BE180L4	F603_11.8 P180 BX180L4	435
135	1443	2.4	10.9	21400				F703_10.9 P180 BE180L4	F703_10.9 P180 BX180L4	439
147	1332	2.4	10.0	21000				F703_10.0 P180 BE180L4	F703_10.0 P180 BX180L4	439
151	1291	1.5	9.7	16900				F603_9.7 P180 BE180L4	F603_9.7 P180 BX180L4	435
164	1192	1.6	9.0	16500				F603_9.0 P180 BE180L4	F603_9.0 P180 BX180L4	435
204	977	1.0	7.2	5250				F512_7.2 P180 BE180L4	F512_7.2 P180 BX180L4	431

30 kW

n_2 min-1	M_2 Nm	S	i	R_{n2} N	IE...		IE...	
16.6	16022	0.9	88.4	52200			F903_88.4 P200 IEC200L4	X451
19.2	13893	1.0	76.7	52400			F903_76.7 P200 IEC200L4	X451
20.8	12825	1.1	70.8	52100			F903_70.8 P200 IEC200L4	X451
23.7	11256	1.2	62.1	51800			F903_62.1 P200 IEC200L4	X451
25.6	10390	1.3	57.3	51400			F903_57.3 P200 IEC200L4	X451
29.5	9044	1.5	49.9	50800			F903_49.9 P200 IEC200L4	X451
32	8348	1.7	46.1	50200			F903_46.1 P200 IEC200L4	X451
32	8216	1.0	45.3	30900			F803_45.3 P200 IEC200L4	X448
36	7341	1.9	40.5	49400			F903_40.5 P200 IEC200L4	X451
38	7069	1.1	39.0	31000			F803_39.0 P200 IEC200L4	X448
39	6776	2.0	37.4	48700			F903_37.4 P200 IEC200L4	X451
41	6525	1.2	36.0	30600			F803_36.0 P200 IEC200L4	X448
47	5664	1.4	31.3	29900			F803_31.3 P200 IEC200L4	X448
47	5618	2.3	31.0	47300			F903_31.0 P200 IEC200L4	X451

Die technischen Daten müssen als Anhaltswert betrachtet werden, die genaue Konfiguration muss mit den Daten der Motorenlieferanten für Motoren mit Leistungen größer als 22kW abgestimmt werden.

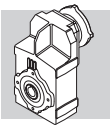

30 kW

n_2 min-1	M_2 Nm	S	i	R_{n2} N	IE...		IEC IE...	
49	5438	0.9	30.0	22300			**F703_30.0 P200 IEC200L4**	X445
51	5229	1.5	28.8	29500			**F803_28.8 P200 IEC200L4**	X448
51	5186	2.3	28.6	46600			**F903_28.6 P200 IEC200L4**	X451
53	5019	0.9	27.7	22200			**F703_27.7 P200 IEC200L4**	X445
58	4601	2.6	25.4	45500			**F903_25.4 P200 IEC200L4**	X451
58	4572	1.2	25.2	29500			**F803_25.2 P200 IEC200L4**	X448
66	4039	3.0	22.3	44400			**F903_22.3 P200 IEC200L4**	X451
67	3992	1.7	22.0	29000			**F803_22.0 P200 IEC200L4**	X448
71	3728	3.0	20.6	43600			**F903_20.6 P200 IEC200L4**	X451
72	3685	1.7	20.3	28500			**F803_20.3 P200 IEC200L4**	X448
83	3209	1.4	17.7	21800			**F703_17.7 P200 IEC200L4**	X445
84	3190	2.1	17.6	27900			**F803_17.6 P200 IEC200L4**	X448
90	2963	1.4	16.3	21500			**F703_16.3 P200 IEC200L4**	X445
90	2945	2.1	16.2	27400			**F803_16.2 P200 IEC200L4**	X448
105	2534	2.7	14.0	26700			**F803_14.0 P200 IEC200L4**	X448
106	2517	1.5	13.9	21100			**F703_13.9 P200 IEC200L4**	X445
114	2339	2.7	12.9	26200			**F803_12.9 P200 IEC200L4**	X448
115	2323	1.5	12.8	20900			**F703_12.8 P200 IEC200L4**	X445
135	1967	1.8	10.9	20300			**F703_10.9 P200 IEC200L4**	X445
142	1874	3.0	10.3	24900			**F803_10.3 P200 IEC200L4**	X448
147	1815	1.8	10.0	20000			**F703_10.0 P200 IEC200L4**	X445

37 kW

n_2 min-1	M_2 Nm	S	i	R_{n2} N	IE...		IEC IE...	
20.9	15710	0.9	70.8	47600			**F903_70.8 P225 IEC225S4**	X451
25.8	12728	1.1	57.3	47700			**F903_57.3 P225 IEC225S4**	X451
29.7	11079	1.3	49.9	47600			**F903_49.9 P225 IEC225S4**	X451
32	10227	1.4	46.1	47200			**F903_46.1 P225 IEC225S4**	X451
37	8993	1.6	40.5	46800			**F903_40.5 P225 IEC225S4**	X451
38	8659	0.9	39.0	28500			**F803_39.0 P225 IEC225S4**	X448
40	8301	1.6	37.4	46300			**F903_37.4 P225 IEC225S4**	X451
41	7993	1.0	36.0	28300			**F803_36.0 P225 IEC225S4**	X448
47	6939	1.2	31.3	28400			**F803_31.3 P225 IEC225S4**	X448
48	6882	1.9	31.0	45300			**F903_31.0 P225 IEC225S4**	X451
51	6405	1.2	28.8	28100			**F803_28.8 P225 IEC225S4**	X448
52	6353	1.9	28.6	44700			**F903_28.6 P225 IEC225S4**	X451
58	5637	2.1	25.4	43900			**F903_25.4 P225 IEC225S4**	X451
59	5601	1.1	25.2	27800			**F803_25.2 P225 IEC225S4**	X448
66	4947	2.4	22.3	43000			**F903_22.3 P225 IEC225S4**	X451
67	4891	1.1	22.0	27600			**F803_22.0 P225 IEC225S4**	X448
72	4567	2.5	20.6	42300			**F903_20.6 P225 IEC225S4**	X451
73	4515	1.1	20.3	27200			**F803_20.3 P225 IEC225S4**	X448
83	3975	2.8	17.9	41200			**F903_17.9 P225 IEC225S4**	X451
84	3908	1.7	17.6	26800			**F803_17.6 P225 IEC225S4**	X448
90	3669	2.8	16.5	40500			**F903_16.5 P225 IEC225S4**	X451
91	3607	1.7	16.2	26300			**F803_16.2 P225 IEC225S4**	X448
102	3226	3.1	14.5	39500			**F903_14.5 P225 IEC225S4**	X451
106	3104	2.2	14.0	25800			**F803_14.0 P225 IEC225S4**	X448
110	2978	3.1	13.4	38700			**F903_13.4 P225 IEC225S4**	X451
115	2865	2.2	12.9	25300			**F803_12.9 P225 IEC225S4**	X448
132	2487	2.4	11.2	24500			**F803_11.2 P225 IEC225S4**	X448
143	2296	2.4	10.3	24300			**F803_10.3 P225 IEC225S4**	X448

Die technischen Daten müssen als Anhaltswert betrachtet werden, die genaue Konfiguration muss mit den Daten der Motorenlieferanten für Motoren mit Leistungen größer als 22kW abgestimmt werden.

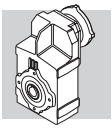

45 kW

n_2 min-1	M_2 Nm	S	i	R_{n2} N	IE...		IEC IE...	
32	12438	1.1	46.1	43900			**F903_46.1 P225 IEC225M4**	X451
37	10937	1.3	40.5	43900			**F903_40.5 P225 IEC225M4**	X451
40	10096	1.3	37.4	43600			**F903_37.4 P225 IEC225M4**	X451
47	8439	0.9	31.3	26100			**F803_31.3 P225 IEC225M4**	X448
48	8370	1.6	31.0	43100			**F903_31.0 P225 IEC225M4**	X451
51	7790	1.0	28.8	26000			**F803_28.8 P225 IEC225M4**	X448
52	7726	1.6	28.6	42600			**F903_28.6 P225 IEC225M4**	X451
58	6855	1.8	25.4	42000			**F903_25.4 P225 IEC225M4**	X451
66	6017	2.0	22.3	41400			**F903_22.3 P225 IEC225M4**	X451
67	5948	1.1	22.0	26000			**F803_22.0 P225 IEC225M4**	X448
72	5554	2.0	20.6	40800			**F903_20.6 P225 IEC225M4**	X451
73	5491	1.1	20.3	25700			**F803_20.3 P225 IEC225M4**	X448
83	4834	2.3	17.9	39900			**F903_17.9 P225 IEC225M4**	X451
84	4753	1.4	17.6	25500			**F803_17.6 P225 IEC225M4**	X448
90	4463	2.3	16.5	39300			**F903_16.5 P225 IEC225M4**	X451
91	4387	1.4	16.2	25200			**F803_16.2 P225 IEC225M4**	X448
102	3924	2.5	14.5	38400			**F903_14.5 P225 IEC225M4**	X451
106	3775	1.8	14.0	24800			**F803_14.0 P225 IEC225M4**	X448
110	3622	2.6	13.4	37800			**F903_13.4 P225 IEC225M4**	X451
115	3484	1.8	12.9	24100			**F803_12.9 P225 IEC225M4**	X448
132	3025	1.5	11.2	24000			**F803_11.2 P225 IEC225M4**	X448
133	3003	2.9	11.1	36400			**F903_11.1 P225 IEC225M4**	X451
143	2792	2.0	10.3	23500			**F803_10.3 P225 IEC225M4**	X448

55 kW

n_2 min-1	M_2 Nm	S	i	R_{n2} N	IE...		IEC IE...	
32	15202	0.9	46.1	39700			**F903_46.1 P250 IEC250M4**	X451
37	13367	1.0	40.5	40300			**F903_40.5 P250 IEC250M4**	X451
40	12339	1.1	37.4	40200			**F903_37.4 P250 IEC250M4**	X451
48	10230	1.3	31.0	40300			**F903_31.0 P250 IEC250M4**	X451
52	9443	1.3	28.6	40100			**F903_28.6 P250 IEC250M4**	X451
58	8379	1.4	25.4	39700			**F903_25.4 P250 IEC250M4**	X451
66	7354	1.6	22.3	39400			**F903_22.3 P250 IEC250M4**	X451
72	6788	1.7	20.6	38900			**F903_20.6 P250 IEC250M4**	X451
83	5909	1.9	17.9	38300			**F903_17.9 P250 IEC250M4**	X451
90	5454	1.9	16.5	37800			**F903_16.5 P250 IEC250M4**	X451
102	4796	2.1	14.5	37100			**F903_14.5 P250 IEC250M4**	X451
110	4427	2.1	13.4	36600			**F903_13.4 P250 IEC250M4**	X451
133	3671	2.4	11.1	35400			**F903_11.1 P250 IEC250M4**	X451
144	3388	2.4	10.3	34800			**F903_10.3 P250 IEC250M4**	X451

Die technischen Daten müssen als Anhaltswert betrachtet werden, die genaue Konfiguration muss mit den Daten der Motorenlieferanten für Motoren mit Leistungen größer als 22kW abgestimmt werden.

F 10 — 140 Nm

	i	n_1 = 2800 min^{-1}					n_1 = 1400 min^{-1}					
		n_2 min^{-1}	M_{n2} Nm	P_{n1} kW	R_{n1} N	R_{n2} N	n_2 min^{-1}	M_{n2} Nm	P_{n1} kW	R_{n1} N	R_{n2} N	
F 10 2_7.4	7.4	378	63	2.6	1000	1290	189	76	1.6	1290	1640	
F 10 2_8.6	8.6	326	67	2.4	980	1350	163	82	1.5	1260	1710	
F 10 2_9.8	9.8	287	73	2.3	980	1410	143	89	1.4	1250	1780	
F 10 2_11.5	11.5	243	78	2.1	950	1480	121	96	1.3	1220	1870	
F 10 2_13.0	13.0	215	85	2.0	940	1530	107	104	1.2	1210	1940	
F 10 2_14.6	14.6	191	94	2.0	1120	1590	96	119	1.3	1300	2000	
F 10 2_17.0	17.0	165	104	1.9	1090	1650	82	128	1.2	1300	2090	
F 10 2_19.3	19.3	145	108	1.7	1100	1730	72	136	1.1	1300	2180	
F 10 2_22.8	22.8	123	119	1.6	1080	1810	61	140	0.95	1300	2310	
F 10 2_25.8	25.8	109	123	1.5	1090	1890	54	140	0.84	1300	2430	
F 10 2_29.6	29.6	94	132	1.4	1060	1970	47	140	0.73	1300	2560	
F 10 2_33.0	33.0	85	137	1.3	1070	2040	42	140	0.65	1300	2670	403
F 10 2_35.3	35.3	79	140	1.2	1060	2090	40	140	0.61	1300	2740	
F 10 2_39.6	39.6	71	140	1.1	1080	2190	35	140	0.54	1300	2800	
F 10 2_44.7	44.7	63	140	0.97	1080	2290	31	140	0.48	1300	2800	
F 10 2_48.7	48.7	57	140	0.89	1090	2370	28.7	140	0.44	1300	2800	
F 10 2_56.7	56.7	49	140	0.76	1100	2520	24.7	140	0.38	1300	2800	
F 10 2_63.0	63.0	44	140	0.69	1110	2620	22.2	140	0.34	1300	2800	
F 10 2_71.1	71.1	39	140	0.61	1000	2750	19.7	140	0.30	1300	2800	
F 10 2_81.3	81.3	34	140	0.53	1110	2800	17.2	140	0.27	1300	2800	
F 10 2_91.5	91.5	31	140	0.47	1110	2800	15.3	140	0.24	1300	2800	
F 10 2_106.0	106.0	26.4	140	0.41	1120	2800	13.2	140	0.20	1300	2800	
F 10 2_127.1	127.1	22.0	140	0.34	1130	2800	11.0	140	0.17	1300	2800	

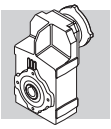

F 10 — 140 Nm

	i	n_1 = 900 min^{-1}					n_1 = 500 min^{-1}					
		n_2 min^{-1}	M_{n2} Nm	P_{n1} kW	R_{n1} N	R_{n2} N	n_2 min^{-1}	M_{n2} Nm	P_{n1} kW	R_{n1} N	R_{n2} N	
F 10 2_7.4	7.4	122	91	1.2	1300	1890	68	111	0.83	1300	2300	
F 10 2_8.6	8.6	105	94	1.1	1300	1970	58	112	0.72	1300	2430	
F 10 2_9.8	9.8	92	107	1.1	1300	2050	51	130	0.73	1300	2490	
F 10 2_11.5	11.5	78	110	0.95	1300	2180	43	131	0.63	1300	2660	
F 10 2_13.0	13.0	69	124	0.94	1300	2240	38	140	0.59	1300	2800	
F 10 2_14.6	14.6	61	138	0.93	1300	2320	34	140	0.53	1300	2800	
F 10 2_17.0	17.0	53	140	0.82	1300	2450	29.5	140	0.46	1300	2800	
F 10 2_19.3	19.3	47	140	0.72	1300	2580	25.9	140	0.40	1300	2800	
F 10 2_22.8	22.8	39	140	0.61	1300	2750	21.9	140	0.34	1300	2800	
F 10 2_25.8	25.8	35	140	0.54	1300	2800	19.4	140	0.30	1300	2800	
F 10 2_29.6	29.6	30	140	0.47	1300	2800	16.9	140	0.26	1300	2800	
F 10 2_33.0	33.0	27.3	140	0.42	1300	2800	15.2	140	0.23	1300	2800	403
F 10 2_35.3	35.3	25.5	140	0.39	1300	2800	14.1	140	0.22	1300	2800	
F 10 2_39.6	39.6	22.7	140	0.35	1300	2800	12.6	140	0.19	1300	2800	
F 10 2_44.7	44.7	20.1	140	0.31	1300	2800	11.2	140	0.17	1300	2800	
F 10 2_48.7	48.7	18.5	140	0.29	1300	2800	10.3	140	0.16	1300	2800	
F 10 2_56.7	56.7	15.9	140	0.24	1300	2800	8.8	140	0.14	1300	2800	
F 10 2_63.0	63.0	14.3	140	0.22	1300	2800	7.9	140	0.12	1300	2800	
F 10 2_71.1	71.1	12.7	140	0.20	1300	2800	7.0	140	0.11	1300	2800	
F 10 2_81.3	81.3	11.1	140	0.17	1300	2800	6.1	140	0.09	1300	2800	
F 10 2_91.5	91.5	9.8	140	0.15	1300	2800	5.5	140	0.08	1300	2800	
F 10 2_106.0	106.0	8.5	140	0.13	1300	2800	4.7	140	0.07	1300	2800	
F 10 2_127.1	127.1	7.1	140	0.11	1300	2800	3.9	140	0.06	1300	2800	

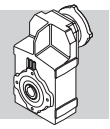

F 20 250 Nm

	i	n_1 = 2800 min^{-1}					n_1 = 1400 min^{-1}					
		n_2 min^{-1}	M_{n2} Nm	P_{n1} kW	R_{n1} N	R_{n2} N	n_2 min^{-1}	M_{n2} Nm	P_{n1} kW	R_{n1} N	R_{n2} N	
F 20 2_6.4	6.4	437	103	5.0	—	1370	218	130	3.1	—	1720	
F 20 2_7.8	7.8	357	115	4.5	—	1440	179	144	2.8	—	1820	
F 20 2_8.7	8.7	321	123	4.3	—	1490	160	155	2.7	—	1870	
F 20 2_10.0	10.0	279	131	4.0	—	1550	140	165	2.5	—	1950	
F 20 2_11.2	11.2	249	141	3.9	—	1590	125	177	2.4	—	2010	
F 20 2_14.8	14.8	189	166	3.5	760	1740	95	203	2.1	1010	2210	
F 20 2_18.1	18.1	155	175	3.0	750	1870	77	213	1.8	1020	2380	
F 20 2_20.2	20.2	139	182	2.8	810	1940	69	223	1.7	1070	2460	
F 20 2_23.1	23.1	121	190	2.5	770	2030	60	235	1.6	1000	2570	
F 20 2_25.9	25.9	108	196	2.3	830	2110	54	240	1.4	1100	2680	
F 20 2_30.4	30.4	92	205	2.1	780	2230	46	250	1.3	1050	2840	
F 20 2_33.1	33.1	85	210	2.0	800	2300	42	250	1.2	1120	2940	
F 20 2_37.9	37.9	74	220	1.8	740	2400	37	250	1.0	1130	3110	
F 20 2_41.8	41.8	67	225	1.7	780	2490	33	250	0.92	1220	3240	
F 20 2_44.8	44.8	62	235	1.6	690	2540	31	250	0.86	1200	3330	
F 20 2_50.7	50.7	55	238	1.4	780	2660	27.6	250	0.76	1320	3500	
F 20 2_56.7	56.7	49	250	1.4	730	2750	24.7	250	0.68	1360	3660	
F 20 2_61.9	61.9	45	250	1.2	750	2860	22.6	250	0.62	1370	3790	
F 20 2_69.1	69.1	40	250	1.1	760	2990	20.2	250	0.56	1370	3950	407
F 20 2_76.8	76.8	36	250	1.0	780	3130	18.2	250	0.50	1380	4000	
F 20 2_90.4	90.4	31	250	0.85	830	3340	15.5	250	0.43	1390	4000	
F 20 2_101.6	101.6	27.5	250	0.76	830	3500	13.8	250	0.38	1390	4000	
F 20 2_114.3	114.3	24.5	250	0.67	850	3670	12.2	250	0.34	1400	4000	
F 20 2_132.2	132.2	21.2	250	0.58	870	3890	10.6	250	0.29	1400	4000	
F 20 3_156.3	156.3	17.9	250	0.50	1170	4000	9.0	250	0.25	1300	4000	
F 20 3_172.6	172.6	16.2	250	0.46	1200	4000	8.1	250	0.23	1300	4000	
F 20 3_184.9	184.9	15.1	250	0.43	1210	4000	7.6	250	0.21	1300	4000	
F 20 3_209.3	209.3	13.4	250	0.38	1240	4000	6.7	250	0.19	1300	4000	
F 20 3_234.0	234.0	12.0	250	0.34	1270	4000	6.0	250	0.17	1300	4000	
F 20 3_255.3	255.3	11.0	250	0.31	1280	4000	5.5	250	0.15	1300	4000	
F 20 3_285.2	285.2	9.8	250	0.28	1300	4000	4.9	250	0.14	1300	4000	
F 20 3_316.9	316.9	8.8	250	0.25	1300	4000	4.4	250	0.12	1300	4000	
F 20 3_372.9	372.9	7.5	250	0.21	1300	4000	3.8	250	0.11	1300	4000	
F 20 3_419.3	419.3	6.7	250	0.19	1300	4000	3.3	250	0.09	1300	4000	
F 20 3_471.7	471.7	5.9	250	0.17	1300	4000	3.0	250	0.08	1300	4000	
F 20 3_545.3	545.3	5.1	250	0.14	1300	4000	2.6	250	0.07	1300	4000	

(—) Nehmen Sie bitte Kontakt mit unserem Applikationsdienst und Querkraftsdaten angeben (Drehrichtung, Orientierung, Anordnung)

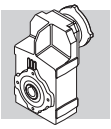

F 20 — 250 Nm

	i	n_1 = 900 min^{-1}					n_1 = 500 min^{-1}					
		n_2 min^{-1}	M_{n2} Nm	P_{n1} kW	R_{n1} N	R_{n2} N	n_2 min^{-1}	M_{n2} Nm	P_{n1} kW	R_{n1} N	R_{n2} N	
F 20 2_6.4	6.4	140	150	2.3	—	1990	218	183	4.4	—	2420	
F 20 2_7.8	7.8	115	167	2.1	—	2110	64	189	1.3	—	2610	
F 20 2_8.7	8.7	103	180	2.0	—	2170	57	219	1.4	—	2640	
F 20 2_10.0	10.0	90	191	1.9	—	2260	50	221	1.2	—	2790	
F 20 2_11.2	11.2	80	205	1.8	—	2330	45	250	1.2	—	2830	
F 20 2_14.8	14.8	61	232	1.6	1210	2570	34	250	0.93	1790	3230	
F 20 2_18.1	18.1	50	250	1.4	1150	2740	27.7	250	0.76	1910	3500	
F 20 2_20.2	20.2	45	250	1.2	1320	2870	24.8	250	0.68	1960	3650	
F 20 2_23.1	23.1	39	250	1.1	1350	3040	21.6	250	0.60	1970	3860	
F 20 2_25.9	25.9	35	250	0.96	1500	3190	19.3	250	0.53	2010	4000	
F 20 2_30.4	30.4	29.6	250	0.82	1530	3400	16.5	250	0.45	2020	4000	
F 20 2_33.1	33.1	27.2	250	0.75	1580	3520	15.1	250	0.42	2040	4000	
F 20 2_37.9	37.9	23.8	250	0.65	1590	3720	13.2	250	0.36	2040	4000	
F 20 2_41.8	41.8	21.5	250	0.59	1610	3870	12.0	250	0.33	2070	4000	
F 20 2_44.8	44.8	20.1	250	0.55	1610	3970	11.2	250	0.31	2060	4000	
F 20 2_50.7	50.7	17.7	250	0.49	1640	4000	9.9	250	0.27	2090	4000	
F 20 2_56.7	56.7	15.9	250	0.44	1650	4000	8.8	250	0.24	2110	4000	
F 20 2_61.9	61.9	14.5	250	0.40	1660	4000	8.1	250	0.22	2110	4000	
F 20 2_69.1	69.1	13.0	250	0.36	1660	4000	7.2	250	0.20	2110	4000	407
F 20 2_76.8	76.8	11.7	250	0.32	1670	4000	6.5	250	0.18	2120	4000	
F 20 2_90.4	90.4	10.0	250	0.27	1680	4000	5.5	250	0.15	2130	4000	
F 20 2_101.6	101.6	8.9	250	0.24	1680	4000	4.9	250	0.14	2130	4000	
F 20 2_114.3	114.3	7.9	250	0.22	1690	4000	4.4	250	0.12	2140	4000	
F 20 2_132.2	132.2	6.8	250	0.19	1690	4000	3.8	250	0.10	2150	4000	
F 20 3_156.3	156.3	5.8	250	0.16	1300	4000	3.2	250	0.09	1300	4000	
F 20 3_172.6	172.6	5.2	250	0.15	1300	4000	2.9	250	0.08	1300	4000	
F 20 3_184.9	184.9	4.9	250	0.14	1300	4000	2.7	250	0.08	1300	4000	
F 20 3_209.3	209.3	4.3	250	0.12	1300	4000	2.4	250	0.07	1300	4000	
F 20 3_234.0	234.0	3.8	250	0.11	1300	4000	2.1	250	0.06	1300	4000	
F 20 3_255.3	255.3	3.5	250	0.10	1300	4000	2.0	250	0.06	1300	4000	
F 20 3_285.2	285.2	3.2	250	0.09	1300	4000	1.8	250	0.05	1300	4000	
F 20 3_316.9	316.9	2.8	250	0.08	1300	4000	1.6	250	0.04	1300	4000	
F 20 3_372.9	372.9	2.4	250	0.07	1300	4000	1.3	250	0.04	1300	4000	
F 20 3_419.3	419.3	2.1	250	0.06	1300	4000	1.2	250	0.03	1300	4000	
F 20 3_471.7	471.7	1.9	250	0.05	1300	4000	1.1	250	0.03	1300	4000	
F 20 3_545.3	545.3	1.7	250	0.05	1300	4000	0.92	250	0.03	1300	4000	

(—) Nehmen Sie bitte Kontakt mit unserem Applikationsdienst und Querkraftsdaten angeben (Drehrichtung, Orientierung, Anordnung)

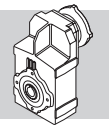

F 25 — 400 Nm

	i	n_1 = 2800 min^{-1}					n_1 = 1400 min^{-1}					
		n_2 min^{-1}	M_{n2} Nm	P_{n1} kW	R_{n1} N	R_{n2} N	n_2 min^{-1}	M_{n2} Nm	P_{n1} kW	R_{n1} N	R_{n2} N	
F 25 2_6.9	6.9	408	155	7.0	—	1840	204	195	4.4	—	2320	411
F 25 2_8.4	8.4	334	170	6.3	—	1950	167	215	4.0	—	2450	
F 25 2_9.4	9.4	299	180	5.9	—	2010	150	225	3.7	—	2540	
F 25 2_10.6	10.6	264	240	7.0	—	1850	132	305	4.4	—	2320	
F 25 2_13.0	13.0	216	255	6.1	—	1990	108	320	3.8	—	2510	
F 25 2_14.5	14.5	194	260	5.5	—	2080	97	330	3.5	—	2610	
F 25 2_16.6	16.6	168	270	5.0	—	2190	84	340	3.2	—	2760	
F 25 2_18.6	18.6	150	280	4.6	—	2270	75	350	2.9	—	2870	
F 25 2_21.8	21.8	128	280	4.0	—	2460	64	355	2.5	250	3090	
F 25 2_23.8	23.8	118	285	3.7	250	2540	59	360	2.3	300	3200	
F 25 2_27.2	27.2	103	290	3.3	250	2690	51	365	2.1	320	3400	
F 25 2_30.0	30.0	93	295	3.0	310	2800	47	370	1.9	410	3540	
F 25 2_32.2	32.2	87	295	2.8	310	2900	44	370	1.8	410	3660	
F 25 2_36.4	36.4	77	295	2.5	460	3070	38	370	1.6	600	3880	
F 25 2_40.7	40.7	69	295	2.2	560	3230	34	370	1.4	720	4080	
F 25 2_44.4	44.4	63	295	2.0	720	3360	32	370	1.3	720	4250	
F 25 3_45.6	45.6	61	340	2.4	1440	3100	31	400	1.4	1830	4030	
F 25 3_50.8	50.8	55	350	2.2	1450	3230	27.6	400	1.2	1850	4250	
F 25 3_58.3	58.3	48	365	2.0	1450	3390	24.0	400	1.1	1860	4530	
F 25 3_65.3	65.3	43	375	1.8	1450	3530	21.4	400	0.97	1870	4780	
F 25 3_76.6	76.6	37	395	1.6	1450	3730	18.3	400	0.82	1880	5140	
F 25 3_83.4	83.4	34	400	1.5	1450	3860	16.8	400	0.76	1880	5330	
F 25 3_95.5	95.5	29.3	400	1.3	1460	4130	14.7	400	0.66	1890	5660	
F 25 3_105.4	105.4	26.6	400	1.2	1470	4320	13.3	400	0.60	1890	5910	
F 25 3_113.0	113.0	24.8	400	1.1	1470	4470	12.4	400	0.56	1890	6090	
F 25 3_127.8	127.8	21.9	400	0.99	1480	4730	11.0	400	0.49	1900	6430	
F 25 3_143.0	143.0	19.6	400	0.88	1480	4980	9.8	400	0.44	1910	6500	
F 25 3_155.9	155.9	18.0	400	0.81	1480	5180	9.0	400	0.40	1910	6500	
F 25 3_174.2	174.2	16.1	400	0.72	1490	5440	8.0	400	0.36	1910	6500	
F 25 3_193.6	193.6	14.5	400	0.65	1490	5700	7.2	400	0.33	1910	6500	
F 25 3_227.8	227.8	12.3	400	0.55	1490	6120	6.1	400	0.28	1920	6500	
F 25 3_256.1	256.1	10.9	400	0.49	1490	6430	5.5	400	0.25	1920	6500	
F 25 3_288.1	288.1	9.7	400	0.44	1490	6500	4.9	400	0.22	1920	6500	
F 25 3_333.1	333.1	8.4	400	0.38	1500	6500	4.2	400	0.19	1930	6500	
F 25 4_393.9	393.9	7.1	400	0.33	1270	6500	3.6	400	0.17	1300	6500	
F 25 4_434.9	434.9	6.4	400	0.30	1290	6500	3.2	400	0.15	1300	6500	
F 25 4_466.0	466.0	6.0	400	0.28	1300	6500	3.0	400	0.14	1300	6500	
F 25 4_527.3	527.3	5.3	400	0.25	1300	6500	2.7	400	0.12	1300	6500	
F 25 4_589.7	589.7	4.7	400	0.22	1300	6500	2.4	400	0.11	1300	6500	
F 25 4_643.3	643.3	4.4	400	0.20	1300	6500	2.2	400	0.10	1300	6500	
F 25 4_718.7	718.7	3.9	400	0.18	1300	6500	1.9	400	0.09	1300	6500	
F 25 4_798.5	798.5	3.5	400	0.16	1300	6500	1.8	400	0.08	1300	6500	
F 25 4_939.8	939.8	3.0	400	0.14	1300	6500	1.5	400	0.07	1300	6500	
F 25 4_1057	1057	2.7	400	0.12	1300	6500	1.3	400	0.06	1300	6500	
F 25 4_1189	1189	2.4	400	0.11	1300	6500	1.2	400	0.05	1300	6500	
F 25 4_1374	1374	2.0	400	0.09	1300	6500	1.0	400	0.05	1300	6500	

(—) Nehmen Sie bitte Kontakt mit unserem Applikationsdienst und Querkraftsdaten angeben (Drehrichtung, Orientierung, Anordnung)

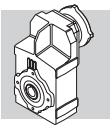

F 25 400 Nm

	i	n_1 = 900 min^{-1}					n_1 = 500 min^{-1}					
		n_2 min^{-1}	M_{n2} Nm	P_{n1} kW	R_{n1} N	R_{n2} N	n_2 min^{-1}	M_{n2} Nm	P_{n1} kW	R_{n1} N	R_{n2} N	
F 25 2_6.9	6.9	131	225	3.2	—	2690	73	255	2.0	370	3350	411
F 25 2_8.4	8.4	107	250	3.0	—	2840	60	260	1.7	590	3630	
F 25 2_9.4	9.4	96	260	2.8	—	2940	53	265	1.6	820	3780	
F 25 2_10.6	10.6	85	355	3.3	—	2680	47	395	2.0	360	3420	
F 25 2_13.0	13.0	69	370	2.8	—	2910	39	400	1.7	620	3750	
F 25 2_14.5	14.5	62	380	2.6	—	3030	35	400	1.5	940	3950	
F 25 2_16.6	16.6	54	395	2.4	—	3190	30	400	1.3	1070	4210	
F 25 2_18.6	18.6	48	400	2.1	300	3350	26.9	400	1.2	1330	4440	
F 25 2_21.8	21.8	41	400	1.8	420	3630	22.9	400	1.0	1450	4770	
F 25 2_23.8	23.8	38	400	1.7	530	3780	21.0	400	0.93	1560	4950	
F 25 2_27.2	27.2	33	400	1.5	610	4030	18.4	400	0.81	1640	5260	
F 25 2_30.0	30.0	30	400	1.3	760	4220	16.6	400	0.73	1790	5490	
F 25 2_32.2	32.2	28.0	400	1.2	760	4360	15.5	400	0.69	1790	5660	
F 25 2_36.4	36.4	24.7	400	1.1	970	4610	13.7	400	0.61	2000	5970	
F 25 2_40.7	40.7	22.1	375	0.91	1330	4950	12.3	375	0.51	2000	6360	
F 25 2_44.4	44.4	20.3	385	0.86	1230	5100	11.3	385	0.48	2000	6500	
F 25 3_45.6	45.6	19.8	400	0.89	2160	4960	11.0	400	0.49	2200	6420	
F 25 3_50.8	50.8	17.7	400	0.80	2180	5210	9.8	400	0.44	2200	6500	
F 25 3_58.3	58.3	15.4	400	0.69	2190	5540	8.6	400	0.39	2200	6500	
F 25 3_65.3	65.3	13.8	400	0.62	2200	5820	7.7	400	0.34	2200	6500	
F 25 3_76.6	76.6	11.8	400	0.53	2200	6240	6.5	400	0.29	2200	6500	
F 25 3_83.4	83.4	10.8	400	0.49	2200	6470	6.0	400	0.27	2200	6500	
F 25 3_95.5	95.5	9.4	400	0.42	2200	6500	5.2	400	0.24	2200	6500	
F 25 3_105.4	105.4	8.5	400	0.38	2200	6500	4.7	400	0.21	2200	6500	
F 25 3_113.0	113.0	8.0	400	0.36	2200	6500	4.4	400	0.20	2200	6500	
F 25 3_127.8	127.8	7.0	400	0.32	2200	6500	3.9	400	0.18	2200	6500	
F 25 3_143.0	143.0	6.3	400	0.28	2200	6500	3.5	400	0.16	2200	6500	
F 25 3_155.9	155.9	5.8	400	0.26	2200	6500	3.2	400	0.14	2200	6500	
F 25 3_174.2	174.2	5.2	400	0.23	2200	6500	2.9	400	0.13	2200	6500	
F 25 3_193.6	193.6	4.6	400	0.21	2200	6500	2.6	400	0.12	2200	6500	
F 25 3_227.8	227.8	4.0	400	0.18	2200	6500	2.2	400	0.10	2200	6500	
F 25 3_256.1	256.1	3.5	400	0.16	2200	6500	2.0	400	0.09	2200	6500	
F 25 3_288.1	288.1	3.1	400	0.14	2200	6500	1.7	400	0.08	2200	6500	
F 25 3_333.1	333.1	2.7	400	0.12	2200	6500	1.5	400	0.07	2200	6500	
F 25 4_393.9	393.9	2.3	400	0.11	1300	6500	1.3	400	0.06	1300	6500	
F 25 4_434.9	434.9	2.1	400	0.10	1300	6500	1.1	400	0.05	1300	6500	
F 25 4_466.0	466.0	1.9	400	0.09	1300	6500	1.1	400	0.05	1300	6500	
F 25 4_527.3	527.3	1.7	400	0.08	1300	6500	0.95	400	0.04	1300	6500	
F 25 4_589.7	589.7	1.5	400	0.07	1300	6500	0.85	400	0.04	1300	6500	
F 25 4_643.3	643.3	1.4	400	0.07	1300	6500	0.78	400	0.04	1300	6500	
F 25 4_718.7	718.7	1.3	400	0.06	1300	6500	0.70	400	0.03	1300	6500	
F 25 4_798.5	798.5	1.1	400	0.05	1300	6500	0.63	400	0.03	1300	6500	
F 25 4_939.8	939.8	0.96	400	0.04	1300	6500	0.53	400	0.02	1300	6500	
F 25 4_1057	1057	0.85	400	0.04	1300	6500	0.47	400	0.02	1300	6500	
F 25 4_1189	1189	0.76	400	0.04	1300	6500	0.42	400	0.02	1300	6500	
F 25 4_1374	1374	0.65	400	0.03	1300	6500	0.36	400	0.02	1300	6500	

(—) Nehmen Sie bitte Kontakt mit unserem Applikationsdienst und Querkraftsdaten angeben (Drehrichtung, Orientierung, Anordnung)

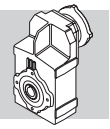

F 31 600 Nm

	i	n_1 = 2800 min^{-1}					n_1 = 1400 min^{-1}					
		n_2 min^{-1}	M_{n2} Nm	P_{n1} kW	R_{n1} N	R_{n2} N	n_2 min^{-1}	M_{n2} Nm	P_{n1} kW	R_{n1} N	R_{n2} N	
F 31 2_6.9	6.9	403	295	13.1	—	2710	201	360	8.0	—	3460	415
F 31 2_8.2	8.2	340	310	11.6	—	2880	170	375	7.0	—	3690	
F 31 2_9.0	9.0	311	310	10.6	—	3000	155	385	6.6	390	3810	
F 31 2_10.7	10.7	261	450	12.9	—	2790	130	525	7.5	500	3670	
F 31 2_12.7	12.7	220	475	11.5	—	2950	110	555	6.7	490	3880	
F 31 2_13.9	13.9	201	475	10.5	290	3100	100	570	6.3	650	4010	
F 31 2_16.8	16.8	167	475	8.7	510	3410	83	595	5.5	680	4310	
F 31 2_18.5	18.5	151	475	7.9	730	3580	76	600	5.0	910	4510	
F 31 2_21.1	21.1	133	475	6.9	830	3830	66	600	4.4	1030	4820	
F 31 2_23.4	23.4	120	475	6.3	1020	4020	60	600	4.0	1270	5060	
F 31 2_27.3	27.3	103	475	5.4	1100	4330	51	600	3.4	1380	5450	
F 31 2_30.1	30.1	93	475	4.9	1270	4540	46	600	3.1	1590	5710	
F 31 2_34.4	34.4	81	475	4.3	1330	4820	41	600	2.7	1660	6070	
F 31 2_37.7	37.7	74	475	3.9	1430	5030	37	600	2.5	1800	6330	
F 31 2_40.4	40.4	69	475	3.6	1440	5190	35	600	2.3	1800	6500	
F 31 2_44.6	44.6	63	475	3.3	1540	5430	31	600	2.1	1930	6500	
F 31 3_47.5	47.5	59	475	3.1	2110	5490	29.4	580	1.9	2200	6500	
F 31 3_52.1	52.1	54	485	2.9	2120	5680	26.9	600	1.8	2200	6500	
F 31 3_62.8	62.8	45	515	2.6	2120	6040	22.3	600	1.5	2200	6500	
F 31 3_69.1	69.1	41	530	2.4	2130	6250	20.3	600	1.4	2200	6500	
F 31 3_78.9	78.9	36	550	2.2	2120	6500	17.8	600	1.2	2200	6500	
F 31 3_87.4	87.4	32	570	2.1	2130	6500	16.0	600	1.1	2200	6500	
F 31 3_101.9	101.9	27.5	595	1.8	2130	6500	13.7	600	0.93	2200	6500	
F 31 3_112.5	112.5	24.9	600	1.7	2130	6500	12.4	600	0.84	2200	6500	
F 31 3_128.4	128.4	21.8	600	1.5	2140	6500	10.9	600	0.74	2200	6500	
F 31 3_140.7	140.7	19.9	600	1.3	2140	6500	9.9	600	0.67	2200	6500	
F 31 3_150.8	150.8	18.6	600	1.3	2140	6500	9.3	600	0.63	2200	6500	
F 31 3_166.8	166.8	16.8	600	1.1	2150	6500	8.4	600	0.57	2200	6500	
F 31 3_185.4	185.4	15.1	600	1.0	2160	6500	7.5	600	0.51	2200	6500	
F 31 3_202.3	202.3	13.8	600	0.94	2160	6500	6.9	600	0.47	2200	6500	
F 31 3_228.2	228.2	12.3	600	0.83	2160	6500	6.1	600	0.41	2200	6500	
F 31 3_253.6	253.6	11.0	600	0.75	2160	6500	5.5	600	0.37	2200	6500	
F 31 3_293.8	293.8	9.5	600	0.64	2170	6500	4.8	600	0.32	2200	6500	
F 31 3_332.8	332.8	8.4	600	0.57	2170	6500	4.2	600	0.28	2200	6500	
F 31 3_374.4	374.4	7.5	600	0.51	2170	6500	3.7	600	0.25	2200	6500	
F 31 4_418.9	418.9	6.7	600	0.47	1230	6500	3.3	600	0.23	1300	6500	
F 31 4_462.6	462.6	6.1	600	0.42	1250	6500	3.0	600	0.21	1300	6500	
F 31 4_527.8	527.8	5.3	600	0.37	1270	6500	2.7	600	0.19	1300	6500	
F 31 4_578.6	578.6	4.8	600	0.34	1290	6500	2.4	600	0.17	1300	6500	
F 31 4_619.9	619.9	4.5	600	0.32	1300	6500	2.3	600	0.16	1300	6500	
F 31 4_685.6	685.6	4.1	600	0.29	1300	6500	2.0	600	0.14	1300	6500	
F 31 4_762.3	762.3	3.7	600	0.26	1300	6500	1.8	600	0.13	1300	6500	
F 31 4_831.6	831.6	3.4	600	0.24	1300	6500	1.7	600	0.12	1300	6500	
F 31 4_938.2	938.2	3.0	600	0.21	1300	6500	1.5	600	0.10	1300	6500	
F 31 4_1042	1042	2.7	600	0.19	1300	6500	1.3	600	0.09	1300	6500	
F 31 4_1208	1208	2.3	600	0.16	1300	6500	1.2	600	0.08	1300	6500	
F 31 4_1368	1368	2.0	600	0.14	1300	6500	1.0	600	0.07	1300	6500	
F 31 4_1539	1539	1.8	600	0.13	1300	6500	0.91	600	0.06	1300	6500	

(—) Nehmen Sie bitte Kontakt mit unserem Applikationsdienst und Querkraftsdaten angeben (Drehrichtung, Orientierung, Anordnung)

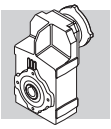

F 31 600 Nm

	i	n_1 = 900 min^{-1}					n_1 = 500 min^{-1}					
		n_2 min^{-1}	M_{n2} Nm	P_{n1} kW	R_{n1} N	R_{n2} N	n_2 min^{-1}	M_{n2} Nm	P_{n1} kW	R_{n1} N	R_{n2} N	
F 31 2_6.9	6.9	130	390	5.6	640	4120	72	390	3.1	2200	5350	415
F 31 2_8.2	8.2	109	390	4.7	990	4450	61	390	2.6	2200	5760	
F 31 2_9.0	9.0	100	390	4.3	1320	4640	55	390	2.4	2200	5980	
F 31 2_10.7	10.7	84	600	5.5	670	4280	47	600	3.1	2200	5710	
F 31 2_12.7	12.7	71	600	4.7	1020	4670	39	600	2.6	2200	6170	
F 31 2_13.9	13.9	65	600	4.3	1350	4880	36	600	2.4	2200	6440	
F 31 2_16.8	16.8	54	600	3.5	1640	5340	29.8	600	2.0	2200	6500	
F 31 2_18.5	18.5	49	600	3.2	1915	5580	27.0	600	1.8	2200	6500	
F 31 2_21.1	21.1	43	600	2.8	2040	5950	23.7	600	1.6	2200	6500	
F 31 2_23.4	23.4	38	600	2.5	2200	6230	21.4	600	1.4	2200	6500	
F 31 2_27.3	27.3	33	600	2.2	2200	6500	18.3	600	1.2	2200	6500	
F 31 2_30.1	30.1	29.9	600	2.0	2200	6500	16.6	600	1.1	2200	6500	
F 31 2_34.4	34.4	26.2	600	1.7	2200	6500	14.6	600	0.96	2200	6500	
F 31 2_37.7	37.7	23.9	600	1.6	2200	6500	13.3	600	0.88	2200	6500	
F 31 2_40.4	40.4	22.3	600	1.5	2200	6500	12.4	600	0.82	2200	6500	
F 31 2_44.6	44.6	20.2	600	1.3	2200	6500	11.2	600	0.74	2200	6500	
F 31 3_47.5	47.5	18.9	600	1.3	2200	6500	10.5	600	0.71	2200	6500	
F 31 3_52.1	52.1	17.3	600	1.2	2200	6500	9.6	600	0.65	2200	6500	
F 31 3_62.8	62.8	14.3	600	0.97	2200	6500	8.0	600	0.54	2200	6500	
F 31 3_69.1	69.1	13.0	600	0.88	2200	6500	7.2	600	0.49	2200	6500	
F 31 3_78.9	78.9	11.4	600	0.77	2200	6500	6.3	600	0.43	2200	6500	
F 31 3_87.4	87.4	10.3	600	0.70	2200	6500	5.7	600	0.39	2200	6500	
F 31 3_101.9	101.9	8.8	600	0.60	2200	6500	4.9	600	0.33	2200	6500	
F 31 3_112.5	112.5	8.0	600	0.54	2200	6500	4.4	600	0.30	2200	6500	
F 31 3_128.4	128.4	7.0	600	0.47	2200	6500	3.9	600	0.26	2200	6500	
F 31 3_140.7	140.7	6.4	600	0.43	2200	6500	3.6	600	0.24	2200	6500	
F 31 3_150.8	150.8	6.0	600	0.40	2200	6500	3.3	600	0.22	2200	6500	
F 31 3_166.8	166.8	5.4	600	0.36	2200	6500	3.0	600	0.20	2200	6500	
F 31 3_185.4	185.4	4.9	600	0.33	2200	6500	2.7	600	0.18	2200	6500	
F 31 3_202.3	202.3	4.4	600	0.30	2200	6500	2.5	600	0.17	2200	6500	
F 31 3_228.2	228.2	3.9	600	0.27	2200	6500	2.2	600	0.15	2200	6500	
F 31 3_253.6	253.6	3.5	600	0.24	2200	6500	2.0	600	0.13	2200	6500	
F 31 3_293.8	293.8	3.1	600	0.21	2200	6500	1.7	600	0.11	2200	6500	
F 31 3_332.8	332.8	2.7	600	0.18	2200	6500	1.5	600	0.10	2200	6500	
F 31 3_374.4	374.4	2.4	600	0.16	2200	6500	1.3	600	0.09	2200	6500	
F 31 4_418.9	418.9	2.1	600	0.15	1300	6500	1.2	600	0.08	1300	6500	
F 31 4_462.6	462.6	1.9	600	0.14	1300	6500	1.1	600	0.08	1300	6500	
F 31 4_527.8	527.8	1.7	600	0.12	1300	6500	0.95	600	0.07	1300	6500	
F 31 4_578.6	578.6	1.6	600	0.11	1300	6500	0.86	600	0.06	1300	6500	
F 31 4_619.9	619.9	1.5	600	0.10	1300	6500	0.81	600	0.06	1300	6500	
F 31 4_685.6	685.6	1.3	600	0.09	1300	6500	0.73	600	0.05	1300	6500	
F 31 4_762.3	762.3	1.2	600	0.08	1300	6500	0.66	600	0.05	1300	6500	
F 31 4_831.6	831.6	1.1	600	0.08	1300	6500	0.60	600	0.04	1300	6500	
F 31 4_938.2	938.2	0.96	600	0.07	1300	6500	0.53	600	0.04	1300	6500	
F 31 4_1042	1042	0.86	600	0.06	1300	6500	0.48	600	0.03	1300	6500	
F 31 4_1208	1208	0.75	600	0.05	1300	6500	0.41	600	0.03	1300	6500	
F 31 4_1368	1368	0.66	600	0.05	1300	6500	0.37	600	0.03	1300	6500	
F 31 4_1539	1539	0.58	600	0.04	1300	6500	0.32	600	0.02	1300	6500	

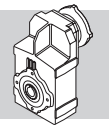

F 41 — 1100 Nm

	i	n_1 = 2800 min^{-1}					n_1 = 1400 min^{-1}					
		n_2 min^{-1}	M_{n2} Nm	P_{n1} kW	R_{n1} N	R_{n2} N	n_2 min^{-1}	M_{n2} Nm	P_{n1} kW	R_{n1} N	R_{n2} N	
F 41 2_6.7	6.7	416	460	21	—	3410	208	580	13.3	—	4290	419
F 41 2_9.1	9.1	306	515	17.4	—	3750	153	650	11.0	—	4730	
F 41 2_10.8	10.8	260	715	21	—	3310	130	900	12.9	—	4170	
F 41 2_14.6	14.6	191	805	17.0	—	3620	96	1015	10.7	—	4560	
F 41 2_17.1	17.1	164	835	15.1	—	3860	82	1055	9.5	—	4850	
F 41 2_18.9	18.9	148	860	14.0	410	4000	74	1085	8.9	500	5030	
F 41 2_24.1	24.1	116	875	11.2	650	4540	58	1100	7.0	840	5730	
F 41 2_30.1	30.1	93	875	9.0	980	5130	46	1100	5.6	1260	6470	
F 41 2_38.2	38.2	73	875	7.1	1260	5810	37	1100	4.4	1600	7330	
F 41 2_47.9	47.9	58	850	5.5	1680	6600	29.2	1070	3.4	2120	8320	
F 41 3_51.5	51.5	54	880	5.4	3030	6750	27.2	1085	3.3	3500	8500	
F 41 3_60.2	60.2	46	930	4.9	3030	7100	23.2	1100	2.9	3500	8500	
F 41 3_66.5	66.5	42	980	4.6	3030	7280	21.1	1100	2.6	3500	8500	
F 41 3_84.9	84.9	33	1065	4.0	3030	7890	16.5	1100	2.0	3500	8500	
F 41 3_106.0	106.0	26.4	1100	3.3	3040	8500	13.2	1100	1.6	3500	8500	
F 41 3_134.4	134.4	20.8	1100	2.6	3050	8500	10.4	1100	1.3	3500	8500	
F 41 3_168.7	168.7	16.6	1100	2.1	3070	8500	8.3	1100	1.0	3500	8500	
F 41 3_180.7	180.7	15.5	1100	1.9	3070	8500	7.7	1100	0.96	3500	8500	
F 41 3_198.9	198.9	14.1	1100	1.7	3080	8500	7.0	1100	0.87	3500	8500	
F 41 3_220.1	220.1	12.7	1100	1.6	3090	8500	6.4	1100	0.79	3500	8500	
F 41 3_240.1	240.1	11.7	1100	1.4	3090	8500	5.8	1100	0.72	3500	8500	
F 41 3_266.9	266.9	10.5	1100	1.3	3090	8500	5.2	1100	0.65	3500	8500	
F 41 3_296.6	296.6	9.4	1100	1.2	3090	8500	4.7	1100	0.58	3500	8500	
F 41 3_344.8	344.8	8.1	1100	1.0	3100	8500	4.1	1100	0.50	3500	8500	
F 41 4_433.7	433.7	6.5	1100	0.83	1480	8500	3.2	1100	0.41	1910	8500	
F 41 4_549.8	549.8	5.1	1100	0.65	1520	8500	2.5	1100	0.33	1940	8500	
F 41 4_690.1	690.1	4.1	1100	0.52	1540	8500	2.0	1100	0.26	1970	8500	
F 41 4_739.4	739.4	3.8	1100	0.48	1550	8500	1.9	1100	0.24	1980	8500	
F 41 4_813.8	813.8	3.4	1100	0.44	1560	8500	1.7	1100	0.22	1990	8500	
F 41 4_900.5	900.5	3.1	1100	0.40	1570	8500	1.6	1100	0.20	2000	8500	
F 41 4_982.4	982.4	2.9	1100	0.36	1570	8500	1.4	1100	0.18	2000	8500	
F 41 4_1092	1092	2.6	1100	0.33	1580	8500	1.3	1100	0.16	2010	8500	
F 41 4_1213	1213	2.3	1100	0.30	1590	8500	1.2	1100	0.15	2020	8500	
F 41 4_1411	1411	2.0	1100	0.25	1600	8500	1.0	1100	0.13	2020	8500	

(—) Nehmen Sie bitte Kontakt mit unserem Applikationsdienst und Querkraftsdaten angeben (Drehrichtung, Orientierung, Anordnung)

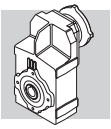

F 41 — 1100 Nm

	i	n_1 = 900 min^{-1}					n_1 = 500 min^{-1}					
		n_2 min^{-1}	M_{n2} Nm	P_{n1} kW	R_{n1} N	R_{n2} N	n_2 min^{-1}	M_{n2} Nm	P_{n1} kW	R_{n1} N	R_{n2} N	
F 41 2_6.7	6.7	134	670	9.9	—	4980	74	700	5.7	1760	6450	419
F 41 2_9.1	9.1	99	700	7.6	680	5660	55	700	4.2	2850	7410	
F 41 2_10.8	10.8	84	1025	9.4	480	4900	46	1100	5.6	1950	6480	
F 41 2_14.6	14.6	62	1100	7.5	860	5550	34	1100	4.1	3030	7590	
F 41 2_17.1	17.1	53	1100	6.4	1230	6060	29.2	1100	3.5	3400	8210	
F 41 2_18.9	18.9	48	1100	5.8	1760	6390	26.5	1100	3.2	3500	8500	
F 41 2_24.1	24.1	37	1100	4.5	2210	7260	20.7	1100	2.5	3500	8500	
F 41 2_30.1	30.1	29.9	1100	3.6	2630	8120	16.6	1100	2.0	3500	8500	
F 41 2_38.2	38.2	23.6	1100	2.9	2970	8500	13.1	1100	1.6	3500	8500	
F 41 2_47.9	47.9	18.8	1070	2.2	3490	8500	10.4	1070	1.2	3500	8500	
F 41 3_51.5	51.5	17.5	1100	2.2	3500	8500	9.7	1100	1.2	3500	8500	
F 41 3_60.2	60.2	14.9	1100	1.9	3500	8500	8.3	1100	1.0	3500	8500	
F 41 3_66.5	66.5	13.5	1100	1.7	3500	8500	7.5	1100	0.93	3500	8500	
F 41 3_84.9	84.9	10.6	1100	1.3	3500	8500	5.9	1100	0.73	3500	8500	
F 41 3_106.0	106.0	8.5	1100	1.1	3500	8500	4.7	1100	0.58	3500	8500	
F 41 3_134.4	134.4	6.7	1100	0.83	3500	8500	3.7	1100	0.46	3500	8500	
F 41 3_168.7	168.7	5.3	1100	0.66	3500	8500	3.0	1100	0.37	3500	8500	
F 41 3_180.7	180.7	5.0	1100	0.62	3500	8500	2.8	1100	0.34	3500	8500	
F 41 3_198.9	198.9	4.5	1100	0.56	3500	8500	2.5	1100	0.31	3500	8500	
F 41 3_220.1	220.1	4.1	1100	0.51	3500	8500	2.3	1100	0.28	3500	8500	
F 41 3_240.1	240.1	3.7	1100	0.46	3500	8500	2.1	1100	0.26	3500	8500	
F 41 3_266.9	266.9	3.4	1100	0.42	3500	8500	1.9	1100	0.23	3500	8500	
F 41 3_296.6	296.6	3.0	1100	0.38	3500	8500	1.7	1100	0.21	3500	8500	
F 41 3_344.8	344.8	2.6	1100	0.32	3500	8500	1.5	1100	0.18	3500	8500	
F 41 4_433.7	433.7	2.1	1100	0.27	2200	8500	1.2	1100	0.15	2200	8500	
F 41 4_549.8	549.8	1.6	1100	0.21	2200	8500	0.91	1100	0.12	2200	8500	
F 41 4_690.1	690.1	1.3	1100	0.17	2200	8500	0.72	1100	0.09	2200	8500	
F 41 4_739.4	739.4	1.2	1100	0.16	2200	8500	0.68	1100	0.09	2200	8500	
F 41 4_813.8	813.8	1.1	1100	0.14	2200	8500	0.61	1100	0.08	2200	8500	
F 41 4_900.5	900.5	1.0	1100	0.13	2200	8500	0.56	1100	0.07	2200	8500	
F 41 4_982.4	982.4	0.92	1100	0.12	2200	8500	0.51	1100	0.07	2200	8500	
F 41 4_1092	1092	0.82	1100	0.11	2200	8500	0.46	1100	0.06	2200	8500	
F 41 4_1213	1213	0.74	1100	0.09	2200	8500	0.41	1100	0.05	2200	8500	
F 41 4_1411	1411	0.64	1100	0.08	2200	8500	0.35	1100	0.05	2200	8500	

(—) Nehmen Sie bitte Kontakt mit unserem Applikationsdienst und Querkraftsdaten angeben (Drehrichtung, Orientierung, Anordnung)

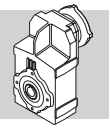

F 51 — 1800 Nm

	i	n_1 = 2800 min^{-1}					n_1 = 1400 min^{-1}					
		n_2 min^{-1}	M_{n2} Nm	P_{n1} kW	R_{n1} N	R_{n2} N	n_2 min^{-1}	M_{n2} Nm	P_{n1} kW	R_{n1} N	R_{n2} N	
F 51 2_7.2	7.2	389	775	33	990	4170	195	975	21	1440	5260	
F 51 2_9.1	9.1	309	875	30	890	4400	155	1100	18.8	1320	5550	
F 51 2_11.1	11.1	252	1055	29	1460	4530	126	1330	18.5	2010	5700	
F 51 2_14.0	14.0	200	1125	25	1580	4920	100	1420	15.7	2150	6200	
F 51 2_18.8	18.8	149	1225	20	1660	5480	74	1545	12.7	2240	6900	
F 51 2_23.8	23.8	118	1310	17.0	1710	5960	59	1650	10.7	2290	7520	
F 51 2_30.0	30.0	93	1350	13.9	1760	6610	47	1700	8.7	2330	8340	
F 51 2_37.1	37.1	75	1350	11.2	1910	7350	38	1700	7.1	2410	9260	
F 51 3_48.9	48.9	57	1505	9.7	2600	7800	28.6	1800	5.8	3310	10100	
F 51 3_65.8	65.8	43	1650	7.9	2610	8640	21.3	1800	4.3	3380	11600	
F 51 3_83.2	83.2	34	1770	6.7	2630	9380	16.8	1800	3.4	3440	12000	
F 51 3_105.1	105.1	26.6	1800	5.4	2650	10400	13.3	1800	2.7	3460	12000	
F 51 3_129.9	129.9	21.6	1800	4.4	2670	11600	10.8	1800	2.2	3490	12000	
F 51 3_165.6	165.6	16.9	1800	3.4	2700	12000	8.5	1800	1.7	3500	12000	
F 51 3_202.4	202.4	13.8	1800	2.8	2710	12000	6.9	1800	1.4	3500	12000	
F 51 3_216.9	216.9	12.9	1800	2.6	2710	12000	6.5	1800	1.3	3500	12000	425
F 51 3_239.8	239.8	11.7	1800	2.4	2730	12000	5.8	1800	1.2	3500	12000	
F 51 3_262.1	262.1	10.7	1800	2.2	2730	12000	5.3	1800	1.1	3500	12000	
F 51 3_285.9	285.9	9.8	1800	2.0	2730	12000	4.9	1800	0.99	3500	12000	
F 51 3_317.3	317.3	8.8	1800	1.8	2740	12000	4.4	1800	0.89	3500	12000	
F 51 3_352.5	352.5	7.9	1800	1.6	2740	12000	4.0	1800	0.80	3500	12000	
F 51 4_429.1	429.1	6.5	1800	1.4	1930	12000	3.3	1800	0.68	2200	12000	
F 51 4_530.5	530.5	5.3	1800	1.1	1970	12000	2.6	1800	0.55	2200	12000	
F 51 4_676.3	676.3	4.1	1800	0.87	2020	12000	2.1	1800	0.43	2200	12000	
F 51 4_826.4	826.4	3.4	1800	0.71	2040	12000	1.7	1800	0.35	2200	12000	
F 51 4_885.5	885.5	3.2	1800	0.66	2050	12000	1.6	1800	0.33	2200	12000	
F 51 4_979.4	979.4	2.9	1800	0.60	2060	12000	1.4	1800	0.30	2200	12000	
F 51 4_1070	1070	2.6	1800	0.55	2070	12000	1.3	1800	0.27	2200	12000	
F 51 4_1168	1168	2.4	1800	0.50	2080	12000	1.2	1800	0.25	2200	12000	
F 51 4_1296	1296	2.2	1800	0.45	2090	12000	1.1	1800	0.23	2200	12000	
F 51 4_1439	1439	1.9	1800	0.41	2100	12000	1.0	1800	0.20	2200	12000	

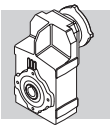

F 51 — 1800 Nm

	i	n_1 = 900 min^{-1}					n_1 = 500 min^{-1}					
		n_2 min^{-1}	M_{n2} Nm	P_{n1} kW	R_{n1} N	R_{n2} N	n_2 min^{-1}	M_{n2} Nm	P_{n1} kW	R_{n1} N	R_{n2} N	
F 51 2_7.2	7.2	125	1100	15.2	1940	6170	70	1100	8.4	3190	8140	
F 51 2_9.1	9.1	99	1100	12.1	2450	6900	55	1100	6.7	3440	9030	
F 51 2_11.1	11.1	81	1520	13.6	2450	6660	45	1700	8.4	3190	8480	
F 51 2_14.0	14.0	64	1620	11.5	2550	7250	36	1700	6.7	3440	9500	
F 51 2_18.8	18.8	48	1700	9.0	2690	8230	26.6	1700	5.0	3500	10900	
F 51 2_23.8	23.8	38	1700	7.1	2870	9250	21.0	1700	3.9	3500	12000	
F 51 2_30.0	30.0	30	1700	5.6	2960	10300	16.6	1700	3.1	3500	12000	
F 51 2_37.1	37.1	24.2	1700	4.5	3040	11400	13.5	1700	2.5	3500	12000	
F 51 3_48.9	48.9	18.4	1800	3.7	3500	12000	10.2	1800	2.1	3500	12000	
F 51 3_65.8	65.8	13.7	1800	2.8	3500	12000	7.6	1800	1.5	3500	12000	
F 51 3_83.2	83.2	10.8	1800	2.2	3500	12000	6.0	1800	1.2	3500	12000	
F 51 3_105.1	105.1	8.6	1800	1.7	3500	12000	4.8	1800	0.96	3500	12000	
F 51 3_129.9	129.9	6.9	1800	1.4	3500	12000	3.8	1800	0.78	3500	12000	
F 51 3_165.6	165.6	5.4	1800	1.1	3500	12000	3.0	1800	0.61	3500	12000	
F 51 3_202.4	202.4	4.4	1800	0.90	3500	12000	2.5	1800	0.50	3500	12000	
F 51 3_216.9	216.9	4.2	1800	0.84	3500	12000	2.3	1800	0.47	3500	12000	425
F 51 3_239.8	239.8	3.8	1800	0.76	3500	12000	2.1	1800	0.42	3500	12000	
F 51 3_262.1	262.1	3.4	1800	0.70	3500	12000	1.9	1800	0.39	3500	12000	
F 51 3_285.9	285.9	3.1	1800	0.64	3500	12000	1.7	1800	0.35	3500	12000	
F 51 3_317.3	317.3	2.8	1800	0.57	3500	12000	1.6	1800	0.32	3500	12000	
F 51 3_352.5	352.5	2.6	1800	0.52	3500	12000	1.4	1800	0.29	3500	12000	
F 51 4_429.1	429.1	2.1	1800	0.44	2200	12000	1.2	1800	0.24	2200	12000	
F 51 4_530.5	530.5	1.7	1800	0.36	2200	12000	0.94	1800	0.20	2200	12000	
F 51 4_676.3	676.3	1.3	1800	0.28	2200	12000	0.74	1800	0.15	2200	12000	
F 51 4_826.4	826.4	1.1	1800	0.23	2200	12000	0.61	1800	0.13	2200	12000	
F 51 4_885.5	885.5	1.0	1800	0.21	2200	12000	0.56	1800	0.12	2200	12000	
F 51 4_979.4	979.4	0.92	1800	0.19	2200	12000	0.51	1800	0.11	2200	12000	
F 51 4_1070	1070	0.84	1800	0.18	2200	12000	0.47	1800	0.10	2200	12000	
F 51 4_1168	1168	0.77	1800	0.16	2200	12000	0.43	1800	0.09	2200	12000	
F 51 4_1296	1296	0.69	1800	0.15	2200	12000	0.39	1800	0.08	2200	12000	
F 51 4_1439	1439	0.63	1800	0.13	2200	12000	0.35	1800	0.07	2200	12000	

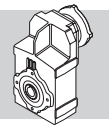

F 60 — 2900 Nm

	i	n_1 = 2800 min^{-1}					n_1 = 1400 min^{-1}					
		n_2 min^{-1}	M_{n2} Nm	P_{n1} kW	R_{n1} N	R_{n2} N	n_2 min^{-1}	M_{n2} Nm	P_{n1} kW	R_{n1} N	R_{n2} N	
F 60 3_9.0	9.0	311	920	32	—	13300	156	1160	20	—	16500	
F 60 3_9.7	9.7	289	1000	33	—	13600	144	1250	20	—	16700	
F 60 3_11.8	11.8	237	1030	28	—	14600	119	1300	17.4	—	17800	
F 60 3_12.7	12.7	220	1110	28	—	14700	110	1400	17.4	—	18000	
F 60 3_14.5	14.5	193	1110	24	—	15500	97	1400	15.3	—	19000	
F 60 3_15.7	15.7	178	1200	24	—	15600	89	1500	15.1	—	19200	
F 60 3_19.1	19.1	147	1200	19.9	—	16800	73	1500	12.4	—	20000	
F 60 3_20.7	20.7	135	1300	19.9	—	17000	68	1640	12.5	—	20000	
F 60 3_23.5	23.5	119	1260	17.0	—	17900	60	1590	10.7	—	20000	
F 60 3_25.4	25.4	110	1370	17.1	—	18100	55	1720	10.7	—	20000	
F 60 3_29.6	29.6	95	2750	29	820	15900	47	2900	15.5	2630	20000	
F 60 3_32.1	32.1	87	2800	28	1290	16200	44	2900	14.3	3260	20000	
F 60 3_38.8	38.8	72	2900	24	1260	17500	36	2900	11.8	3480	20000	
F 60 3_42.1	42.1	67	2900	22	1820	17900	33	2900	10.9	3720	20000	
F 60 3_47.8	47.8	59	2900	19.2	1770	19100	29.3	2900	9.6	3730	20000	
F 60 3_51.8	51.8	54	2900	17.7	2290	19500	27.0	2900	8.9	3830	20000	
F 60 3_63.0	63.0	44	2900	14.6	2310	20000	22.2	2900	7.3	3850	20000	
F 60 3_68.3	68.3	41	2900	13.4	2790	20000	20.5	2900	6.7	3940	20000	
F 60 3_77.6	77.6	36	2900	11.8	2620	20000	18.0	2900	5.9	3920	20000	
F 60 3_84.0	84.0	33	2900	10.9	2960	20000	16.7	2900	5.5	4010	20000	
F 60 3_98.2	98.2	28.5	2900	9.3	2910	20000	14.3	2900	4.7	3980	20000	
F 60 3_106.4	106.4	26.3	2900	8.6	3020	20000	13.2	2900	4.3	4070	20000	
F 60 3_120.5	120.5	23.2	2900	7.6	2970	20000	11.6	2900	3.8	4030	20000	
F 60 3_130.5	130.5	21.5	2900	7.0	3060	20000	10.7	2900	3.5	4110	20000	427
F 60 3_150.4	150.4	18.6	2900	6.1	3010	20000	9.3	2900	3.0	4060	20000	
F 60 3_162.9	162.9	17.2	2900	5.6	3090	20000	8.6	2900	2.8	4140	20000	
F 60 3_185.9	185.9	15.1	2900	4.9	3050	20000	7.5	2900	2.5	4100	20000	
F 60 3_201.4	201.4	13.9	2900	4.6	3130	20000	7.0	2900	2.3	4180	20000	
F 60 3_217.6	217.6	12.9	2900	4.2	3070	20000	6.4	2900	2.1	4120	20000	
F 60 3_235.8	235.8	11.9	2900	3.9	3140	20000	5.9	2900	1.9	4190	20000	
F 60 3_259.1	259.1	10.8	2900	3.5	3080	20000	5.4	2900	1.8	4130	20000	
F 60 3_280.7	280.7	10.0	2900	3.3	3150	20000	5.0	2900	1.6	4200	20000	
F 60 4_315.4	315.4	8.9	2900	3.0	3500	20000	4.4	2900	1.5	3500	20000	
F 60 4_341.7	341.7	8.2	2900	2.8	3500	20000	4.1	2900	1.4	3500	20000	
F 60 4_399.3	399.3	7.0	2900	2.4	3500	20000	3.5	2900	1.2	3500	20000	
F 60 4_432.6	432.6	6.5	2900	2.2	3500	20000	3.2	2900	1.1	3500	20000	
F 60 4_489.8	489.8	5.7	2900	1.9	3500	20000	2.9	2900	0.96	3500	20000	
F 60 4_530.7	530.7	5.3	2900	1.8	3500	20000	2.6	2900	0.89	3500	20000	
F 60 4_611.4	611.4	4.6	2900	1.5	3500	20000	2.3	2900	0.77	3500	20000	
F 60 4_662.4	662.4	4.2	2900	1.4	3500	20000	2.1	2900	0.71	3500	20000	
F 60 4_756.0	756.0	3.7	2900	1.2	3500	20000	1.9	2900	0.62	3500	20000	
F 60 4_819.0	819.0	3.4	2900	1.1	3500	20000	1.7	2900	0.57	3500	20000	
F 60 4_885.1	885.1	3.2	2900	1.1	3500	20000	1.6	2900	0.53	3500	20000	
F 60 4_958.9	958.9	2.9	2900	0.98	3500	20000	1.5	2900	0.49	3500	20000	
F 60 4_1054	1054	2.7	2900	0.89	3500	20000	1.3	2900	0.45	3500	20000	
F 60 4_1141	1141	2.5	2900	0.83	3500	20000	1.2	2900	0.41	3500	20000	

(—) Nehmen Sie bitte Kontakt mit unserem Applikationsdienst und Querkraftsdaten angeben (Drehrichtung, Orientierung, Anordnung)

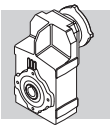

F 60 — 2900 Nm

	i	n_1 = 900 min^{-1}					n_1 = 500 min^{-1}					
		n_2 min^{-1}	M_{n2} Nm	P_{n1} kW	R_{n1} N	R_{n2} N	n_2 min^{-1}	M_{n2} Nm	P_{n1} kW	R_{n1} N	R_{n2} N	
F 60 3_9.0	9.0	100	1340	15.1	—	18800	56	1630	10.2	—	20000	
F 60 3_9.7	9.7	93	1460	15.3	—	19000	52	1780	10.4	—	20000	
F 60 3_11.8	11.8	76	1500	12.9	—	20000	42	1830	8.8	—	20000	
F 60 3_12.7	12.7	71	1620	13.0	—	20000	39	1900	8.4	600	20000	
F 60 3_14.5	14.5	62	1620	11.4	—	20000	34	1900	7.4	490	20000	
F 60 3_15.7	15.7	57	1750	11.3	—	20000	32	1900	6.8	1630	20000	
F 60 3_19.1	19.1	47	1750	9.3	—	20000	26.2	1900	5.6	1660	20000	
F 60 3_20.7	20.7	43	1900	9.3	—	20000	24.2	1900	5.2	2700	20000	
F 60 3_23.5	23.5	38	1840	8.0	—	20000	21.3	1900	4.6	2340	20000	
F 60 3_25.4	25.4	35	1900	7.6	620	20000	19.7	1900	4.2	3330	20000	
F 60 3_29.6	29.6	30	2900	10.0	4220	20000	16.9	2900	5.5	4700	20000	
F 60 3_32.1	32.1	28.0	2900	9.2	4350	20000	15.6	2900	5.1	4700	20000	
F 60 3_38.8	38.8	23.2	2900	7.6	4420	20000	12.9	2900	4.2	4700	20000	
F 60 3_42.1	42.1	21.4	2900	7.0	4530	20000	11.9	2900	3.9	4700	20000	
F 60 3_47.8	47.8	18.8	2900	6.2	4530	20000	10.5	2900	3.4	4700	20000	
F 60 3_51.8	51.8	17.4	2900	5.7	4640	20000	9.7	2900	3.2	4700	20000	
F 60 3_63.0	63.0	14.3	2900	4.7	4660	20000	7.9	2900	2.6	4700	20000	
F 60 3_68.3	68.3	13.2	2900	4.3	4700	20000	7.3	2900	2.4	4700	20000	
F 60 3_77.6	77.6	11.6	2900	3.8	4700	20000	6.4	2900	2.1	4700	20000	
F 60 3_84.0	84.0	10.7	2900	3.5	4700	20000	6.0	2900	1.9	4700	20000	
F 60 3_98.2	98.2	9.2	2900	3.0	4700	20000	5.1	2900	1.7	4700	20000	
F 60 3_106.4	106.4	8.5	2900	2.8	4700	20000	4.7	2900	1.5	4700	20000	
F 60 3_120.5	120.5	7.5	2900	2.4	4700	20000	4.1	2900	1.4	4700	20000	
F 60 3_130.5	130.5	6.9	2900	2.3	4700	20000	3.8	2900	1.3	4700	20000	427
F 60 3_150.4	150.4	6.0	2900	2.0	4700	20000	3.3	2900	1.1	4700	20000	
F 60 3_162.9	162.9	5.5	2900	1.8	4700	20000	3.1	2900	1.0	4700	20000	
F 60 3_185.9	185.9	4.8	2900	1.6	4700	20000	2.7	2900	0.88	4700	20000	
F 60 3_201.4	201.4	4.5	2900	1.5	4700	20000	2.5	2900	0.81	4700	20000	
F 60 3_217.6	217.6	4.1	2900	1.4	4700	20000	2.3	2900	0.75	4700	20000	
F 60 3_235.8	235.8	3.8	2900	1.3	4700	20000	2.1	2900	0.69	4700	20000	
F 60 3_259.1	259.1	3.5	2900	1.1	4700	20000	1.9	2900	0.63	4700	20000	
F 60 3_280.7	280.7	3.2	2900	1.1	4700	20000	1.8	2900	0.58	4700	20000	
F 60 4_315.4	315.4	2.9	2900	0.96	3500	20000	1.6	2900	0.53	3500	20000	
F 60 4_341.7	341.7	2.6	2900	0.89	3500	20000	1.5	2900	0.49	3500	20000	
F 60 4_399.3	399.3	2.3	2900	0.76	3500	20000	1.3	2900	0.42	3500	20000	
F 60 4_432.6	432.6	2.1	2900	0.70	3500	20000	1.2	2900	0.39	3500	20000	
F 60 4_489.8	489.8	1.8	2900	0.62	3500	20000	1.0	2900	0.34	3500	20000	
F 60 4_530.7	530.7	1.7	2900	0.57	3500	20000	0.94	2900	0.32	3500	20000	
F 60 4_611.4	611.4	1.5	2900	0.50	3500	20000	0.82	2900	0.28	3500	20000	
F 60 4_662.4	662.4	1.4	2900	0.46	3500	20000	0.75	2900	0.25	3500	20000	
F 60 4_756.0	756.0	1.2	2900	0.40	3500	20000	0.66	2900	0.22	3500	20000	
F 60 4_819.0	819.0	1.1	2900	0.37	3500	20000	0.61	2900	0.21	3500	20000	
F 60 4_885.1	885.1	1.0	2900	0.34	3500	20000	0.56	2900	0.19	3500	20000	
F 60 4_958.9	958.9	0.94	2900	0.32	3500	20000	0.52	2900	0.18	3500	20000	
F 60 4_1054	1054	0.85	2900	0.29	3500	20000	0.47	2900	0.16	3500	20000	
F 60 4_1141	1141	0.79	2900	0.27	3500	20000	0.44	2900	0.15	3500	20000	

(—) Nehmen Sie bitte Kontakt mit unserem Applikationsdienst und Querkraftsdaten angeben (Drehrichtung, Orientierung, Anordnung)

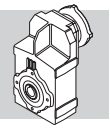

F 70 — 5000 Nm

	i	n_1 = 2800 min^{-1}					n_1 = 1400 min^{-1}					
		n_2 min^{-1}	M_{n2} Nm	P_{n1} kW	R_{n1} N	R_{n2} N	n_2 min^{-1}	M_{n2} Nm	P_{n1} kW	R_{n1} N	R_{n2} N	
F 70 3_10.0	10.0	280	2600	82	1410	14800	140	3200	51	1750	18200	431
F 70 3_10.9	10.9	257	2800	81	1510	14700	128	3450	50	1840	18100	
F 70 3_12.8	12.8	219	2900	72	860	15700	109	3600	44	880	19300	
F 70 3_13.9	13.9	201	3150	72	810	15600	101	3900	44	880	19100	
F 70 3_16.3	16.3	172	3250	63	570	16600	86	4000	39	710	20500	
F 70 3_17.7	17.7	158	3550	63	430	16400	79	4350	39	630	20200	
F 70 3_20.9	20.9	134	3450	52	690	18000	67	4000	30	2090	22700	
F 70 3_22.6	22.6	124	3750	52	640	17800	62	4350	30	2010	22500	
F 70 3_24.6	24.6	114	3550	46	560	19000	57	4000	26	2510	24200	
F 70 3_27.7	27.7	101	3750	43	5070	19600	51	4650	27	6410	24100	
F 70 3_30.0	30.0	93	4050	43	5080	19400	47	5000	26	6420	23900	
F 70 3_35.4	35.4	79	4150	37	5070	20900	40	5000	22	6440	25900	
F 70 3_38.4	38.4	73	4500	37	5060	20700	36	5000	21	6540	26500	
F 70 3_45.2	45.2	62	4600	32	5080	22200	31	5000	17.5	6590	28700	
F 70 3_49.0	49.0	57	4600	30	5170	22700	28.6	5000	16.1	6680	29300	
F 70 3_57.7	57.7	49	5000	27	5090	23800	24.3	5000	13.7	6680	31600	
F 70 3_62.5	62.5	45	5000	25	5170	24300	22.4	5000	12.7	6760	32300	
F 70 3_67.9	67.9	41	5000	23	5110	25500	20.6	5000	11.6	6710	33600	
F 70 3_73.6	73.6	38	5000	21	5190	26100	19.0	5000	10.7	6790	34400	
F 70 3_85.4	85.4	33	5000	18.5	5190	28000	16.4	5000	9.3	6780	35000	
F 70 3_92.5	92.5	30	5000	17.1	5260	28700	15.1	5000	8.5	6860	35000	
F 70 3_101.2	101.2	27.7	5000	15.6	5220	30000	13.8	5000	7.8	6820	35000	
F 70 3_109.6	109.6	25.5	5000	14.4	5290	30700	12.8	5000	7.2	6890	35000	
F 70 3_122.7	122.7	22.8	5000	12.9	5250	32300	11.4	5000	6.4	6850	35000	
F 70 3_133.0	133.0	21.1	5000	11.9	5320	33100	10.5	5000	5.9	6920	35000	
F 70 3_153.8	153.8	18.2	5000	10.3	5280	35000	9.1	5000	5.1	6880	35000	
F 70 3_166.7	166.7	16.8	5000	9.5	5350	35000	8.4	5000	4.7	6950	35000	
F 70 3_180.9	180.9	15.5	5000	8.7	5310	35000	7.7	5000	4.4	6910	35000	
F 70 3_196.0	196.0	14.3	5000	8.1	5370	35000	7.1	5000	4.0	6970	35000	
F 70 4_216.5	216.5	12.9	5000	7.5	2130	35000	6.5	5000	3.7	2860	35000	
F 70 4_234.6	234.6	11.9	5000	6.9	2130	35000	6.0	5000	3.5	2860	35000	
F 70 4_280.9	280.9	10.0	5000	5.8	2200	35000	5.0	5000	2.9	2940	35000	
F 70 4_304.3	304.3	9.2	5000	5.3	2200	35000	4.6	5000	2.7	2940	35000	
F 70 4_372.5	372.5	7.5	5000	4.4	2260	35000	3.8	5000	2.2	3000	35000	
F 70 4_403.5	403.5	6.9	5000	4.0	2260	35000	3.5	5000	2.0	3000	35000	
F 70 4_471.2	471.2	5.9	5000	3.4	2300	35000	3.0	5000	1.7	3040	35000	
F 70 4_510.4	510.4	5.5	5000	3.2	2300	35000	2.7	5000	1.6	3040	35000	
F 70 4_606.8	606.8	4.6	5000	2.7	2340	35000	2.3	5000	1.3	3070	35000	
F 70 4_657.4	657.4	4.3	5000	2.5	2340	35000	2.1	5000	1.2	3070	35000	
F 70 4_759.0	759.0	3.7	5000	2.1	2360	35000	1.8	5000	1.1	3090	35000	
F 70 4_822.2	822.2	3.4	5000	2.0	2360	35000	1.7	5000	1.0	3090	35000	
F 70 4_899.4	899.4	3.1	5000	1.8	2370	35000	1.6	5000	0.90	3110	35000	
F 70 4_974.4	974.4	2.9	5000	1.7	2370	35000	1.4	5000	0.83	3110	35000	
F 70 4_1091	1091	2.6	5000	1.5	2390	35000	1.3	5000	0.74	3120	35000	
F 70 4_1182	1182	2.4	5000	1.4	2390	35000	1.2	5000	0.69	3120	35000	
F 70 4_1368	1368	2.0	5000	1.2	2400	35000	1.0	5000	0.59	3130	35000	
F 70 4_1481	1481	1.9	5000	1.1	2400	35000	0.95	5000	0.55	3130	35000	
F 70 4_1585	1585	1.8	5000	1.0	2410	35000	0.88	5000	0.51	3140	35000	
F 70 4_1717	1717	1.6	5000	0.95	2410	35000	0.82	5000	0.47	3140	35000	
F 70 4_2019	2019	1.4	5000	0.80	2420	35000	0.69	5000	0.40	3150	35000	
F 70 4_2188	2188	1.3	5000	0.74	2420	35000	0.64	5000	0.37	3150	35000	

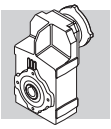

F 70 5000 Nm

	i	n_1 = 900 min^{-1}					n_1 = 500 min^{-1}					
		n_2 min^{-1}	M_{n2} Nm	P_{n1} kW	R_{n1} N	R_{n2} N	n_2 min^{-1}	M_{n2} Nm	P_{n1} kW	R_{n1} N	R_{n2} N	
F 70 3_10.0	10.0	90	3200	33	4870	21700	50	3200	18.1	7000	27000	431
F 70 3_10.9	10.9	83	3450	32	4970	21700	46	3450	17.9	7000	27200	
F 70 3_12.8	12.8	70	3850	31	2540	22500	39	3600	15.9	7000	28300	
F 70 3_13.9	13.9	65	4200	31	2380	22400	36	3900	15.8	7000	28300	
F 70 3_16.3	16.3	55	4000	25	3830	24500	31	4000	13.9	7000	30700	
F 70 3_17.7	17.7	51	4350	25	3750	24400	28.2	4350	13.9	7000	30800	
F 70 3_20.9	20.9	43	4000	19.5	5210	27000	23.9	4000	10.8	7000	33700	
F 70 3_22.6	22.6	40	4350	19.6	5130	26900	22.1	4350	10.9	7000	33800	
F 70 3_24.6	24.6	37	4000	16.5	5630	28700	20.3	4000	9.2	7000	35000	
F 70 3_27.7	27.7	32	5000	18.4	7000	28100	18.1	4650	9.5	7000	35000	
F 70 3_30.0	30.0	30	5000	16.9	7000	28800	16.7	5000	9.4	7000	35000	
F 70 3_35.4	35.4	25.4	5000	14.4	7000	31000	14.1	5000	8.0	7000	35000	
F 70 3_38.4	38.4	23.4	5000	13.2	7000	31700	13.0	5000	7.4	7000	35000	
F 70 3_45.2	45.2	19.9	5000	11.2	7000	34100	11.1	5000	6.2	7000	35000	
F 70 3_49.0	49.0	18.4	5000	10.4	7000	34900	10.2	5000	5.8	7000	35000	
F 70 3_57.7	57.7	15.6	5000	8.8	7000	35000	8.7	5000	4.9	7000	35000	
F 70 3_62.5	62.5	14.4	5000	8.1	7000	35000	8.0	5000	4.5	7000	35000	
F 70 3_67.9	67.9	13.3	5000	7.5	7000	35000	7.4	5000	4.2	7000	35000	
F 70 3_73.6	73.6	12.2	5000	6.9	7000	35000	6.8	5000	3.8	7000	35000	
F 70 3_85.4	85.4	10.5	5000	6.0	7000	35000	5.9	5000	3.3	7000	35000	
F 70 3_92.5	92.5	9.7	5000	5.5	7000	35000	5.4	5000	3.1	7000	35000	
F 70 3_101.2	101.2	8.9	5000	5.0	7000	35000	4.9	5000	2.8	7000	35000	
F 70 3_109.6	109.6	8.2	5000	4.6	7000	35000	4.6	5000	2.6	7000	35000	
F 70 3_122.7	122.7	7.3	5000	4.1	7000	35000	4.1	5000	2.3	7000	35000	
F 70 3_133.0	133.0	6.8	5000	3.8	7000	35000	3.8	5000	2.1	7000	35000	
F 70 3_153.8	153.8	5.9	5000	3.3	7000	35000	3.3	5000	1.8	7000	35000	
F 70 3_166.7	166.7	5.4	5000	3.0	7000	35000	3.0	5000	1.7	7000	35000	
F 70 3_180.9	180.9	5.0	5000	2.8	7000	35000	2.8	5000	1.6	7000	35000	
F 70 3_196.0	196.0	4.6	5000	2.6	7000	35000	2.6	5000	1.4	7000	35000	
F 70 4_216.5	216.5	4.2	5000	2.4	3430	35000	2.3	5000	1.3	3500	35000	
F 70 4_234.6	234.6	3.8	5000	2.2	3430	35000	2.1	5000	1.2	3500	35000	
F 70 4_280.9	280.9	3.2	5000	1.9	3500	35000	1.8	5000	1.0	3500	35000	
F 70 4_304.3	304.3	3.0	5000	1.7	3500	35000	1.6	5000	0.95	3500	35000	
F 70 4_372.5	372.5	2.4	5000	1.4	3500	35000	1.3	5000	0.78	3500	35000	
F 70 4_403.5	403.5	2.2	5000	1.3	3500	35000	1.2	5000	0.72	3500	35000	
F 70 4_471.2	471.2	1.9	5000	1.1	3500	35000	1.1	5000	0.62	3500	35000	
F 70 4_510.4	510.4	1.8	5000	1.0	3500	35000	0.98	5000	0.57	3500	35000	
F 70 4_606.8	606.8	1.5	5000	0.86	3500	35000	0.82	5000	0.48	3500	35000	
F 70 4_657.4	657.4	1.4	5000	0.79	3500	35000	0.76	5000	0.44	3500	35000	
F 70 4_759.0	759.0	1.2	5000	0.69	3500	35000	0.66	5000	0.38	3500	35000	
F 70 4_822.2	822.2	1.1	5000	0.63	3500	35000	0.61	5000	0.35	3500	35000	
F 70 4_899.4	899.4	1.0	5000	0.58	3500	35000	0.56	5000	0.32	3500	35000	
F 70 4_974.4	974.4	0.92	5000	0.54	3500	35000	0.51	5000	0.30	3500	35000	
F 70 4_1091	1091	0.82	5000	0.48	3500	35000	0.46	5000	0.27	3500	35000	
F 70 4_1182	1182	0.76	5000	0.44	3500	35000	0.42	5000	0.25	3500	35000	
F 70 4_1368	1368	0.66	5000	0.38	3500	35000	0.37	5000	0.21	3500	35000	
F 70 4_1481	1481	0.61	5000	0.35	3500	35000	0.34	5000	0.20	3500	35000	
F 70 4_1585	1585	0.57	5000	0.33	3500	35000	0.32	5000	0.18	3500	35000	
F 70 4_1717	1717	0.52	5000	0.30	3500	35000	0.29	5000	0.17	3500	35000	
F 70 4_2019	2019	0.45	5000	0.26	3500	35000	0.25	5000	0.14	3500	35000	
F 70 4_2188	2188	0.41	5000	0.24	3500	35000	0.23	5000	0.13	3500	35000	

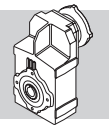

F 80 — 8000 Nm

	i	n_1 = 2800 min^{-1}					n_1 = 1400 min^{-1}					
		n_2 min^{-1}	M_{n2} Nm	P_{n1} kW	R_{n1} N	R_{n2} N	n_2 min^{-1}	M_{n2} Nm	P_{n1} kW	R_{n1} N	R_{n2} N	
F 80 3_10.3	10.3	272	3250	100	610	17200	136	4100	63	220	21800	
F 80 3_11.2	11.2	250	3520	99	620	17800	125	4440	63	230	21700	
F 80 3_12.9	12.9	217	3560	87	670	18900	109	4480	55	350	23100	
F 80 3_14.0	14.0	200	3850	87	700	18800	100	4860	55	310	23000	
F 80 3_16.2	16.2	173	3760	73	760	20300	86	4740	46	430	24800	
F 80 3_17.6	17.6	159	4000	72	730	20300	80	5140	46	410	24700	
F 80 3_20.3	20.3	138	4060	63	780	21700	69	5120	40	440	26500	
F 80 3_22.0	22.0	127	4400	63	780	21600	64	5540	40	470	26400	
F 80 3_25.2	25.2	111	4230	53	700	23300	56	5330	33	360	28500	
F 80 3_28.8	28.8	97	6550	72	4590	20500	49	8000	44	5890	25400	
F 80 3_31.3	31.3	89	7100	72	4590	20000	45	8000	40	6040	26000	
F 80 3_36.0	36.0	78	7250	64	4560	21500	39	8000	35	6110	28100	
F 80 3_39.0	39.0	72	6700	54	4890	23000	36	8000	32	6240	28800	
F 80 3_45.3	45.3	62	7900	55	4440	22700	31	8000	28	6240	31100	
F 80 3_49.1	49.1	57	8000	52	4750	23200	28.5	8000	26	6360	31900	
F 80 3_56.7	56.7	49	8000	45	4780	25200	24.7	8000	22	6390	34300	
F 80 3_61.5	61.5	46	8000	41	4890	25800	22.8	8000	21	6500	35100	
F 80 3_70.4	70.4	40	8000	36	4850	27800	19.9	8000	18.0	6460	37500	
F 80 3_76.3	76.3	37	8000	33	4950	28500	18.3	8000	16.6	6560	38400	
F 80 3_85.2	85.2	33	8000	30	4940	30300	16.4	8000	14.8	6550	40500	
F 80 3_92.3	92.3	30	8000	27	5040	31000	15.2	8000	13.7	6640	41500	
F 80 3_105.0	105.0	26.7	8000	24	5000	33200	13.3	8000	12.0	6610	44000	
F 80 3_113.8	113.8	24.6	8000	22	5090	34000	12.3	8000	11.1	6700	45000	
F 80 3_122.5	122.5	22.9	8000	21	5020	35400	11.4	8000	10.3	6630	45000	
F 80 3_132.7	132.7	21.1	8000	19.1	5110	36200	10.6	8000	9.5	6720	45000	
F 80 3_147.9	147.9	18.9	8000	17.1	5060	38200	9.5	8000	8.6	6660	45000	434
F 80 3_160.2	160.2	17.5	8000	15.8	5140	39100	8.7	8000	7.9	6750	45000	
F 80 3_184.6	184.6	15.2	8000	13.7	5090	41800	7.6	8000	6.9	6700	45000	
F 80 3_200.0	200.0	14.0	8000	12.7	5180	42800	7.0	8000	6.3	6780	45000	
F 80 4_218.5	218.5	12.8	8000	11.9	1020	45000	6.4	8000	5.9	2400	45000	
F 80 4_273.9	273.9	10.2	8000	9.5	1470	45000	5.1	8000	4.7	2680	45000	
F 80 4_296.7	296.7	9.4	8000	8.8	1470	45000	4.7	8000	4.4	2680	45000	
F 80 4_353.7	353.7	7.9	8000	7.3	1850	45000	4.0	8000	3.7	2770	45000	
F 80 4_383.2	383.2	7.3	8000	6.8	1850	45000	3.7	8000	3.4	2770	45000	
F 80 4_451.5	451.5	6.2	8000	5.8	2040	45000	3.1	8000	2.9	2820	45000	
F 80 4_489.1	489.1	5.7	8000	5.3	2040	45000	2.9	8000	2.7	2820	45000	
F 80 4_563.9	563.9	5.0	8000	4.6	2130	45000	2.5	8000	2.3	2860	45000	
F 80 4_610.9	610.9	4.6	8000	4.3	2130	45000	2.3	8000	2.1	2860	45000	
F 80 4_714.9	714.9	3.9	8000	3.6	2160	45000	2.0	8000	1.8	2890	45000	
F 80 4_774.4	774.4	3.6	8000	3.4	2160	45000	1.8	8000	1.7	2890	45000	
F 80 4_897.3	897.3	3.1	8000	2.9	2200	45000	1.6	8000	1.4	2930	45000	
F 80 4_972.0	972.0	2.9	8000	2.7	2200	45000	1.4	8000	1.3	2930	45000	
F 80 4_1058	1058	2.6	8000	2.5	2210	45000	1.3	8000	1.2	2950	45000	
F 80 4_1146	1146	2.4	8000	2.3	2210	45000	1.2	8000	1.1	2950	45000	
F 80 4_1277	1277	2.2	8000	2.0	2230	45000	1.1	8000	1.0	2960	45000	
F 80 4_1384	1384	2.0	8000	1.9	2230	45000	1.0	8000	0.94	2960	45000	
F 80 4_1578	1578	1.8	8000	1.6	2240	45000	0.89	8000	0.82	2970	45000	
F 80 4_1709	1709	1.6	8000	1.5	2240	45000	0.82	8000	0.76	2970	45000	
F 80 4_1834	1834	1.5	8000	1.4	2250	45000	0.76	8000	0.71	2980	45000	
F 80 4_1987	1987	1.4	8000	1.3	2250	45000	0.70	8000	0.65	2980	45000	

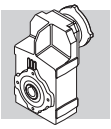

F 80 — 8000 Nm

	i	n_1 = 900 min^{-1}					n_1 = 500 min^{-1}					
		n_2 min^{-1}	M_{n2} Nm	P_{n1} kW	R_{n1} N	R_{n2} N	n_2 min^{-1}	M_{n2} Nm	P_{n1} kW	R_{n1} N	R_{n2} N	
F 80 3_10.3	10.3	87	4740	47	—	24700	49	5770	32	—	29300	
F 80 3_11.2	11.2	80	5140	47	—	24600	45	6250	32	—	29200	
F 80 3_12.9	12.9	70	5200	41	—	26200	39	6320	28	—	31100	
F 80 3_14.0	14.0	64	5620	41	—	26100	36	6800	27	—	31000	
F 80 3_16.2	16.2	56	5490	34	—	28200	31	6250	22	1540	34200	
F 80 3_17.6	17.6	51	5960	34	—	28100	28.4	6800	22	1410	30000	
F 80 3_20.3	20.3	44	5930	30	—	30100	24.6	6250	17.4	3710	37300	
F 80 3_22.0	22.0	41	6420	30	—	30000	22.7	6800	17.5	3590	37200	
F 80 3_25.2	25.2	36	6175	25	—	32400	19.8	6250	14.0	4660	40500	
F 80 3_28.8	28.8	31	8000	28	7000	31000	17.4	8000	15.7	7000	39600	
F 80 3_31.3	31.3	28.8	8000	26	7000	31700	16.0	8000	14.4	7000	40600	
F 80 3_36.0	36.0	25.0	8000	23	7000	34100	13.9	8000	12.6	7000	43300	
F 80 3_39.0	39.0	23.1	8000	21	7000	34900	12.8	8000	11.6	7000	44300	
F 80 3_45.3	45.3	19.9	8000	18.0	7000	37500	11.0	8000	10.0	7000	45000	
F 80 3_49.1	49.1	18.3	8000	16.6	7000	38400	10.2	8000	9.2	7000	45000	
F 80 3_56.7	56.7	15.9	8000	14.3	7000	41100	8.8	8000	8.0	7000	45000	
F 80 3_61.5	61.5	14.6	8000	13.2	7000	42000	8.1	8000	7.3	7000	45000	
F 80 3_70.4	70.4	12.8	8000	11.6	7000	44700	7.1	8000	6.4	7000	45000	
F 80 3_76.3	76.3	11.8	8000	10.7	7000	45000	6.6	8000	5.9	7000	45000	
F 80 3_85.2	85.2	10.6	8000	9.5	7000	45000	5.9	8000	5.3	7000	45000	
F 80 3_92.3	92.3	9.8	8000	8.8	7000	45000	5.4	8000	4.9	7000	45000	
F 80 3_105.0	105.0	8.6	8000	7.7	7000	45000	4.8	8000	4.3	7000	45000	
F 80 3_113.8	113.8	7.9	8000	7.1	7000	45000	4.4	8000	4.0	7000	45000	
F 80 3_122.5	122.5	7.3	8000	6.6	7000	45000	4.1	8000	3.7	7000	45000	
F 80 3_132.7	132.7	6.8	8000	6.1	7000	45000	3.8	8000	3.4	7000	45000	
F 80 3_147.9	147.9	6.1	8000	5.5	7000	45000	3.4	8000	3.1	7000	45000	434
F 80 3_160.2	160.2	5.6	8000	5.1	7000	45000	3.1	8000	2.8	7000	45000	
F 80 3_184.6	184.6	4.9	8000	4.4	7000	45000	2.7	8000	2.4	7000	45000	
F 80 3_200.0	200.0	4.5	8000	4.1	7000	45000	2.5	8000	2.3	7000	45000	
F 80 4_218.5	218.5	4.1	8000	3.8	3130	45000	2.3	8000	2.1	3500	45000	
F 80 4_273.9	273.9	3.3	8000	3.0	3240	45000	1.8	8000	1.7	3500	45000	
F 80 4_296.7	296.7	3.0	8000	2.8	3240	45000	1.7	8000	1.6	3500	45000	
F 80 4_353.7	353.7	2.5	8000	2.4	3330	45000	1.4	8000	1.3	3500	45000	
F 80 4_383.2	383.2	2.3	8000	2.2	3330	45000	1.3	8000	1.2	3500	45000	
F 80 4_451.5	451.5	2.0	8000	1.8	3380	45000	1.1	8000	1.0	3500	45000	
F 80 4_489.1	489.1	1.8	8000	1.7	3380	45000	1.0	8000	0.95	3500	45000	
F 80 4_563.9	563.9	1.6	8000	1.5	3420	45000	0.89	8000	0.82	3500	45000	
F 80 4_610.9	610.9	1.5	8000	1.4	3420	45000	0.82	8000	0.76	3500	45000	
F 80 4_714.9	714.9	1.3	8000	1.2	3460	45000	0.70	8000	0.65	3500	45000	
F 80 4_774.4	774.4	1.2	8000	1.1	3460	45000	0.65	8000	0.60	3500	45000	
F 80 4_897.3	897.3	1.0	8000	0.93	3490	45000	0.56	8000	0.52	3500	45000	
F 80 4_972.0	972.0	0.93	8000	0.86	3490	45000	0.51	8000	0.48	3500	45000	
F 80 4_1058	1058	0.85	8000	0.79	3500	45000	0.47	8000	0.44	3500	45000	
F 80 4_1146	1146	0.79	8000	0.73	3500	45000	0.44	8000	0.40	3500	45000	
F 80 4_1277	1277	0.70	8000	0.65	3500	45000	0.39	8000	0.36	3500	45000	
F 80 4_1384	1384	0.65	8000	0.60	3500	45000	0.36	8000	0.34	3500	45000	
F 80 4_1578	1578	0.57	8000	0.53	3500	45000	0.32	8000	0.29	3500	45000	
F 80 4_1709	1709	0.53	8000	0.49	3500	45000	0.29	8000	0.27	3500	45000	
F 80 4_1834	1834	0.49	8000	0.46	3500	45000	0.27	8000	0.25	3500	45000	
F 80 4_1987	1987	0.45	8000	0.42	3500	45000	0.25	8000	0.23	3500	45000	

(—) Nehmen Sie bitte Kontakt mit unserem Applikationsdienst und Querkraftsdaten angeben (Drehrichtung, Orientierung, Anordnung)

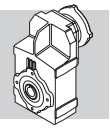

F 90 — 14000 Nm

	i	n_1 = 2800 min^{-1}					n_1 = 1400 min^{-1}					
		n_2 min^{-1}	M_{n2} Nm	P_{n1} kW	R_{n1} N	R_{n2} N	n_2 min^{-1}	M_{n2} Nm	P_{n1} kW	R_{n1} N	R_{n2} N	
F 90 3_10.3	10.3	272	6500	200	5480	23800	136	8000	123	8000	29300	437
F 90 3_11.1	11.1	252	7150	204	5280	23300	126	8800	125	7770	28700	
F 90 3_13.4	13.4	209	7550	178	4880	25000	104	9300	110	7280	30700	
F 90 3_14.5	14.5	193	8100	177	5000	24700	97	10000	109	7400	30300	
F 90 3_16.5	16.5	170	8400	161	4540	26000	85	10300	99	6960	32000	
F 90 3_17.9	17.9	156	8950	158	4560	25700	78	11000	97	7180	31700	
F 90 3_20.6	20.6	136	9200	141	3980	27400	68	11300	87	6260	33700	
F 90 3_22.3	22.3	126	9750	138	4280	27100	63	12000	85	6590	33400	
F 90 3_25.4	25.4	110	10050	125	3620	28700	55	12000	75	6310	36000	
F 90 3_28.6	28.6	98	9750	108	9800	30900	49	12000	66	12400	38000	
F 90 3_31.0	31.0	90	10550	108	9800	30300	45	13000	66	12400	37300	
F 90 3_37.4	37.4	75	10950	93	9820	32800	37	13500	57	12400	40400	
F 90 3_40.5	40.5	69	11900	93	9820	32100	35	14000	55	12500	40600	
F 90 3_46.1	46.1	61	12050	83	9840	34300	30	14000	48	12600	43600	
F 90 3_49.9	49.9	56	13050	83	9840	33500	28.1	14000	44	12700	44700	
F 90 3_57.3	57.3	49	13050	72	9810	36300	24.4	14000	39	12700	48100	
F 90 3_62.1	62.1	45	14000	71	9830	35600	22.5	14000	36	12800	49300	
F 90 3_70.8	70.8	40	14000	63	9830	38500	19.8	14000	31	12800	52700	
F 90 3_76.7	76.7	37	14000	58	9960	39500	18.3	14000	29	13000	54000	
F 90 3_88.4	88.4	32	14000	50	9930	42800	15.8	14000	25	12900	55000	
F 90 3_95.8	95.8	29.2	14000	46	10100	43800	14.6	14000	23	13100	55000	
F 90 3_103.3	103.3	27.1	14000	43	9960	45900	13.6	14000	21	13000	55000	
F 90 3_111.9	111.9	25.0	14000	40	10100	47100	12.5	14000	19.8	13100	55000	
F 90 3_126.8	126.8	22.1	14000	35	10000	50300	11.0	14000	17.5	13000	55000	
F 90 3_137.3	137.3	20.4	14000	32	10100	51500	10.2	14000	16.1	13100	55000	
F 90 3_150.3	150.3	18.6	14000	29	10100	54000	9.3	14000	14.7	13100	55000	
F 90 3_162.8	162.8	17.2	14000	27	10200	55000	8.6	14000	13.6	13200	55000	
F 90 3_179.2	179.2	15.6	14000	25	10200	55000	7.8	14000	12.4	13100	55000	
F 90 3_194.2	194.2	14.4	14000	23	10200	55000	7.2	14000	11.4	13200	55000	
F 90 4_213.6	213.6	13.1	14000	21	—	55000	6.6	14000	10.6	—	55000	
F 90 4_231.4	231.4	12.1	14000	19.6	—	55000	6.1	14000	9.8	—	55000	
F 90 4_268.7	268.7	10.4	14000	16.9	—	55000	5.2	14000	8.5	420	55000	
F 90 4_291.1	291.1	9.6	14000	15.6	—	55000	4.8	14000	7.8	420	55000	
F 90 4_361.8	361.8	7.7	14000	12.6	—	55000	3.9	14000	6.3	990	55000	
F 90 4_392.0	392.0	7.1	14000	11.6	—	55000	3.6	14000	5.8	990	55000	
F 90 4_457.5	457.5	6.1	14000	9.9	—	55000	3.1	14000	5.0	1390	55000	
F 90 4_495.6	495.6	5.6	14000	9.2	—	55000	2.8	14000	4.6	1390	55000	
F 90 4_577.5	577.5	4.8	14000	7.9	—	55000	2.4	14000	3.9	1600	55000	
F 90 4_625.6	625.6	4.5	14000	7.3	—	55000	2.2	14000	3.6	1600	55000	
F 90 4_714.0	714.0	3.9	14000	6.4	—	55000	2.0	14000	3.2	1800	55000	
F 90 4_773.4	773.4	3.6	14000	5.9	—	55000	1.8	14000	2.9	1800	55000	
F 90 4_910.2	910.2	3.1	14000	5.0	—	55000	1.5	14000	2.5	2020	55000	
F 90 4_986.0	986.0	2.8	14000	4.6	—	55000	1.4	14000	2.3	2020	55000	
F 90 4_1112	1112	2.5	14000	4.1	—	55000	1.3	14000	2.0	2110	55000	
F 90 4_1205	1205	2.3	14000	3.8	—	55000	1.2	14000	1.9	2110	55000	
F 90 4_1318	1318	2.1	14000	3.4	—	55000	1.1	14000	1.7	2220	55000	
F 90 4_1428	1428	2.0	14000	3.2	—	55000	0.98	14000	1.6	2220	55000	
F 90 4_1571	1571	1.8	14000	2.9	—	55000	0.89	14000	1.4	2260	55000	
F 90 4_1702	1702	1.6	14000	2.7	—	55000	0.82	14000	1.3	2260	55000	
F 90 4_1937	1937	1.4	14000	2.3	—	55000	0.72	14000	1.2	2300	55000	
F 90 4_2099	2099	1.3	14000	2.2	—	55000	0.67	14000	1.1	2300	55000	

(—) Nehmen Sie bitte Kontakt mit unserem Applikationsdienst und Querkraftsdaten angeben (Drehrichtung, Orientierung, Anordnung)

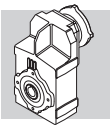

F 90 — 14000 Nm

	i	n_1 = 900 min^{-1}					n_1 = 500 min^{-1}					
		n_2 min^{-1}	M_{n2} Nm	P_{n1} kW	R_{n1} N	R_{n2} N	n_2 min^{-1}	M_{n2} Nm	P_{n1} kW	R_{n1} N	R_{n2} N	
F 90 3_10.3	10.3	87	9150	90	10000	33400	49	9600	53	15000	41900	437
F 90 3_11.1	11.1	81	10050	92	9780	32700	45	10400	53	15000	41600	
F 90 3_13.4	13.4	67	10600	80	9270	35100	37	12500	53	12700	42100	
F 90 3_14.5	14.5	62	11400	80	9390	34600	34	13550	53	12700	41400	
F 90 3_16.5	16.5	55	11750	72	8890	36600	30	12300	42	14600	46400	
F 90 3_17.9	17.9	50	12550	71	9140	36200	27.9	13150	41	14800	46200	
F 90 3_20.6	20.6	44	12200	60	9100	39700	24.3	12200	33	15000	51000	
F 90 3_22.3	22.3	40	13200	60	9120	39000	22.4	13200	33	15000	50700	
F 90 3_25.4	25.4	35	12000	48	10400	43800	19.7	12000	27	15000	55000	
F 90 3_28.6	28.6	31	13700	49	14400	43400	17.5	14000	28	15000	55000	
F 90 3_31.0	31.0	29.0	14000	46	14500	44000	16.1	14000	26	15000	55000	
F 90 3_37.4	37.4	24.1	14000	38	14700	48400	13.4	14000	21	15000	55000	
F 90 3_40.5	40.5	22.2	14000	35	14800	49600	12.3	14000	19.5	15000	55000	
F 90 3_46.1	46.1	19.5	14000	31	14900	53000	10.8	14000	17.2	15000	55000	
F 90 3_49.9	49.9	18.0	14000	29	15000	54200	10.0	14000	15.8	15000	55000	
F 90 3_57.3	57.3	15.7	14000	25	15000	55000	8.7	14000	13.8	15000	55000	
F 90 3_62.1	62.1	14.5	14000	23	15000	55000	8.1	14000	12.7	15000	55000	
F 90 3_70.8	70.8	12.7	14000	20	15000	55000	7.1	14000	11.2	15000	55000	
F 90 3_76.7	76.7	11.7	14000	18.6	15000	55000	6.5	14000	10.3	15000	55000	
F 90 3_88.4	88.4	10.2	14000	16.1	15000	55000	5.7	14000	8.9	15000	55000	
F 90 3_95.8	95.8	9.4	14000	14.9	15000	55000	5.2	14000	8.3	15000	55000	
F 90 3_103.3	103.3	8.7	14000	13.8	15000	55000	4.8	14000	7.7	15000	55000	
F 90 3_111.9	111.9	8.0	14000	12.7	15000	55000	4.5	14000	7.1	15000	55000	
F 90 3_126.8	126.8	7.1	14000	11.2	15000	55000	3.9	14000	6.2	15000	55000	
F 90 3_137.3	137.3	6.6	14000	10.4	15000	55000	3.6	14000	5.8	15000	55000	
F 90 3_150.3	150.3	6.0	14000	9.5	15000	55000	3.3	14000	5.3	15000	55000	
F 90 3_162.8	162.8	5.5	14000	8.7	15000	55000	3.1	14000	4.9	15000	55000	
F 90 3_179.2	179.2	5.0	14000	7.9	15000	55000	2.8	14000	4.4	15000	55000	
F 90 3_194.2	194.2	4.6	14000	7.3	15000	55000	2.6	14000	4.1	15000	55000	
F 90 4_213.6	213.6	4.2	14000	6.8	810	55000	2.3	14000	3.8	2350	55000	
F 90 4_231.4	231.4	3.9	14000	6.3	810	55000	2.2	14000	3.5	2350	55000	
F 90 4_268.7	268.7	3.3	14000	5.4	1390	55000	1.9	14000	3.0	2920	55000	
F 90 4_291.1	291.1	3.1	14000	5.0	1390	55000	1.7	14000	2.8	2920	55000	
F 90 4_361.8	361.8	2.5	14000	4.0	1960	55000	1.4	14000	2.2	3390	55000	
F 90 4_392.0	392.0	2.3	14000	3.7	1960	55000	1.3	14000	2.1	3390	55000	
F 90 4_457.5	457.5	2.0	14000	3.2	2360	55000	1.1	14000	1.8	3490	55000	
F 90 4_495.6	495.6	1.8	14000	2.9	2360	55000	1.0	14000	1.6	3490	55000	
F 90 4_577.5	577.5	1.6	14000	2.5	2570	55000	0.87	14000	1.4	3500	55000	
F 90 4_625.6	625.6	1.4	14000	2.3	2570	55000	0.80	14000	1.3	3500	55000	
F 90 4_714.0	714.0	1.3	14000	2.0	2770	55000	0.70	14000	1.1	3500	55000	
F 90 4_773.4	773.4	1.2	14000	1.9	2770	55000	0.65	14000	1.0	3500	55000	
F 90 4_910.2	910.2	0.99	14000	1.6	2840	55000	0.55	14000	0.89	3500	55000	
F 90 4_986.0	986.0	0.91	14000	1.5	2840	55000	0.51	14000	0.82	3500	55000	
F 90 4_1112	1112	0.81	14000	1.3	2860	55000	0.45	14000	0.73	3500	55000	
F 90 4_1205	1205	0.75	14000	1.2	2860	55000	0.41	14000	0.67	3500	55000	
F 90 4_1318	1318	0.68	14000	1.1	2890	55000	0.38	14000	0.62	3500	55000	
F 90 4_1428	1428	0.63	14000	1.0	2890	55000	0.35	14000	0.57	3500	55000	
F 90 4_1571	1571	0.57	14000	0.93	2900	55000	0.32	14000	0.52	3500	55000	
F 90 4_1702	1702	0.53	14000	0.86	2900	55000	0.29	14000	0.48	3500	55000	
F 90 4_1937	1937	0.46	14000	0.75	2910	55000	0.26	14000	0.42	3500	55000	
F 90 4_2099	2099	0.43	14000	0.70	2910	55000	0.24	14000	0.39	3500	55000	

64 ANBAUMÖGLICHKEITEN

In den Tabellen (D55) und (D56) werden die von den Größen her gesehenen möglichen Anbaumöglichkeiten angegeben.

Die angemessene Getriebewahl muss unter Befolgung der im Paragraph 11 gegebenen Anleitungen und auf der Grundlage der Auswahltabelle der technischen Daten erfolgen.

(D 55)

		IEC_ BN BE BX (IM B5)																					
		BN		BN	BE	BN	BE	BN	BE	BN	BE	BN	BE	BX	BN	BE	BX	BN	BE	BX	BN	IEC	IEC
P_{n1}(#) [kW]	2p	0.37	0.75	1.5	1.1	2.2	2.2	4	3	4	4	9.2	9.2	—	18.5	18.5	—	22	—	—	30	45	55
	4p	0.25	0.55	1.1	0.75	1.85	1.5	3	3	4	4	9.2	9.2	7.5	15	15	15	22	22	22	30	47	55
	6p	0.12	0.37	0.75	—	1.1	0.75	1.85	1.5	2.2	2.2	5.5	4	—	11	7.5	—	15	—	—	18.5	30	37
		P63	P71	P80		P90		P100		P112		P132			P160			P180			P200	P225	P250
F 10 2	i =	7.4_127.1		7.4_91.5				7.4_91.5															
F 20 2	i =	8.7_132.2 ⊖ (14.8_18.1)		6.4_114.3				6.4_114.3															
F 20 3	i =	156.3_545.3		156.3_545.3				156.3_545.3															
F 25 2	i =	9.4_44.4 ⊖ (10.6_13.0)		6.9_44.4				6.9_44.4															
F 25 3	i =	50.8_333.1		45.6_288.1				45.6_288.1															
F 25 4	i =	393.9_1374		393.9_1374				393.9_1374															
F 31 2	i =	18.5_44.6		6.9_44.6				6.9_44.6				6.9_37.7											
F 31 3	i =	69.1_374.4		47.5_374.4				47.5_374.4				47.5_140.7											
F 31 4	i =	418.9_1539		418.9_1539				418.9_1539															
F 41 2	i =	24.1_47.9		6.7_47.9				6.7_47.9				6.7_47.9											
F 41 3	i =	84.9_344.8		51.5_344.8				51.5_344.8				51.5_168.7											
F 41 4	i =	433.7_1411		433.7_1411				433.7_1411															
F 51 2	i =	30.0_37.1		7.2_37.1				7.2_37.1				7.2_37.1			7.2_37.1			7.2_37.1					
F 51 3	i =	105.1_352.5		48.9_352.5				48.9_352.5				48.9_202.4			48.9_202.4			48.9_202.4					
F 51 4	i =	429.1_1439		429.1_1439				429.1_1439				429.1_826.4											
F 60 3	i =	98.2_280.7		11.8_280.7 ⊖ (29.6_32.1)				11.8_280.7 ⊖ (29.6_32.1)				9.0_201.4			9.0_201.4			9.0_201.4					
F 60 4	i =	315.4_1141		315.4_1141				315.4_1141															
F 70 3	i =			85.4_196.0				85.4_196.0				16.3_196.0 ⊖ (27.7_38.4)			10.0_196.0			10.0_196.0			10.0_49.0 ⊖ (20.9_24.6)		
F 70 4	i =	372.5_2188		216.5_2188				216.5_2188				216.5_822.2											
F 80 3	i =			105.0_200.0				105.0_200.0				20.3_200.0 ⊖ (28.8_49.1)			12.9_200.0 ⊖ (28.8_31.3)			10.3_200.0			10.3_132.7	10.3_132.7	
F 80 4	i =	451.5_1987		218.5_1987				218.5_1987				218.5_972.0											
F 90 3	i =			126.8_194.2				126.8_194.2				25.4_194.2 ⊖ (28.6_62.1)			20.6_194.2 ⊖ (28.6_49.9)			10.3_194.2			10.3_162.8	10.3_162.8	10.3_162.8
F 90 4	i =	577.5_2099		213.6_2099				213.6_2099				213.6_1205			213.6_1205			213.6_1205					

(#) P_{n1} = max. installierbare Leistung für IEC Motoradapter P_

(D 56)

		M	ME	MX			
		M05	**M1**	**M2 - ME2**	**ME3**	**ME4 - MX4**	**ME5 - MX5**
F 10 2		7.4_127.1	7.4_71.1	7.4_91.5	7.4_91.5		
F 20 2		8.7_132.2 ⛔ (14.8_18.1)	8.7_90.4 ⛔ (14.8_18.1)	6.4_114.3	6.4_114.3		
F 20 3		156.3_545.3	156.3_545.3	156.3_545.3	156.3_545.3		
F 25 2		9.4_44.4 ⛔ (10.6_13.0)	9.4_44.4 ⛔ (10.6_13.0)	6.9_44.4	6.9_44.4		
F 25 3		50.8_333.1	50.8_227.8	45.6_288.1	45.6_288.1		
F 25 4		393.9_1374	393.9_1374	393.9_1374	393.9_1374		
F 31 2			18.5_44.6	6.9_44.6	6.9_44.6	6.9_37.7	
F 31 3			69.1_293.8	47.5_374.4	47.5_374.4	47.5_140.7	
F 31 4		418.9_1539	418.9_1539	418.9_1539	418.9_1539		
F 41 2			24.1_47.9	6.7_47.9	6.7_47.9	6.7_47.9	
F 41 3			84.9_344.8	51.5_344.8	51.5_344.8	51.5_168.7	
F 41 4	**i =**	433.7_1411	433.7_1411	433.7_1411	433.7_1411		
F 51 2			30.0_37.1	7.2_37.1	7.2_37.1	7.2_37.1	7.2_37.1
F 51 3			105.1_352.5	48.9_352.5	48.9_352.5	48.9_202.4	48.9_202.4
F 51 4			429.1_1439	429.1_1439	429.1_1439	429.1_826.4	
F 60 3				11.8_280.7 ⛔ (29.6_32.1)	11.8_280.7 ⛔ (29.6_32.1)	9_201.4	9_201.4
F 60 4			315.4_1141	315.4_1141	315.4_1141		
F 70 3				85.4_196.0	85.4_196.0	16.3_196.0 ⛔ (27.7_38.4)	16.3_196.0 ⛔ (27.7_38.4)
F 70 4			372.5_2188	216.5_2188	216.5_2188	216.5_822.2	
F 80 3					105.0_200.0	20.3_200.0 ⛔ (28.8_49.1)	20.3_200.0 ⛔ (28.8_49.1)
F 80 4			451.5_1987	218.5_1987	218.5_1987	218.5_972.0	
F 90 3					126.8_194.2	25.4_194.2 ⛔ (28.6_62.1)	25.4_194.2 ⛔ (28.6_62.1)
F 90 4				213.6_2099	213.6_2099	213.6_1205	

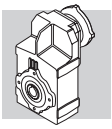

Für viele Servomotoren der wichtigsten Hersteller stehen passende Motoradapter für die Baugrößen F 10 … F 60 zur Verfügung. Die Abmessungen der Servomotor-Eingänge entnehmen Sie bitte dem Zeichnungsteil der verschiedenen Baugrößen. Der Bezeichnungszusatz **SK** steht für Eingänge mit herkömmlicher Passfedernut. Der Zusatz **SC** bezieht sich stattdessen auf Eingänge mit Klemmvorrichtung.

(D 57)

		SERVO INPUT							
		SK60A	SK60B	SK80A	SK80B	SK80C	SK95A	SK95B	SK95C
		SC60A	SC60B	SC80A	SC80B	SC80C	SC95A	SC95B	SC95C
F 10 2	i =	7.4_127.1	7.4_71.1	7.4_71.1		7.4_91.5	7.4_71.1	7.4_91.5	7.4_91.5
F 20 2		8.7_132.2 ⛔ (14.8_18.1)	8.7_90.4 ⛔ (14.8_18.1)	8.7_90.4 ⛔ (14.8_18.1)		6.4_114.3	8.7_90.4 ⛔ (14.8_18.1)	6.4_114.3	6.4_114.3
F 20 3		156.3_545.3	156.3_545.3	156.3_545.3		156.3_545.3	156.3_545.3	156.3_545.3	156.3_545.3
F 25 2		9.4_44.4 ⛔ (10.6_13.0)	9.4_44.4 ⛔ (10.6_13.0)	9.4_44.4 ⛔ (10.6_13.0)		6.9_44.4	9.4_44.4 ⛔ (10.6_13.0)	6.9_44.4	6.9_44.4
F 25 3		45.6_333.1	45.6_227.8	45.6_227.8		45.6_288.1	45.6_227.8	45.6_288.1	45.6_288.1
F 25 4		393.9_1374	393.9_1374	393.9_1374		393.9_1374	393.9_1374	393.9_1374	393.9_1374
F 31 2		18.5_44.6	18.5_44.6	18.5_44.6		6.9_44.6	18.5_44.6	6.9_44.6	6.9_44.6
F 31 3		69.1_374.4	69.1_293.8	69.1_293.8		47.5_374.4	69.1_293.8	47.5_374.4	47.5_374.4
F 31 4		418.9_1539	418.9_1539	418.9_1539		418.9_1539	418.9_1539	418.9_1539	418.9_1539
F 41 2					24.1_47.9	6.7_47.9	24.1_47.9	6.7_47.9	6.7_47.9
F 41 3					84.9_344.8	51.5_344.8	84.9_344.8	51.5_344.8	51.5_344.8
F 41 4		433.7_1411	433.7_1411	433.7_1411		433.7_1411	433.7_1411	433.7_1411	433.7_1411
F 51 2					30.0_37.1	7.2_37.1	30.0_37.1	7.2_37.1	7.2_37.1
F 51 3					105.1_352.5	48.9_352.5	105.1_352.5	48.9_352.5	48.9_352.5
F 51 4						429.1_1439	429.1_1439	429.1_1439	429.1_1439
F 60 3						11.8_280.7 ⛔ (29.6_32.1)	106.4_280.7	11.8_280.7 ⛔ (29.6_32.1)	11.8_280.7 ⛔ (29.6_32.1)
F 60 4					315.4_1141	315.4_1141	315.4_1141	315.4_1141	315.4_1141

(D 58)

		SERVO INPUT					
		SK110A	SK110B	SK130A	SK130B	SK180A	SK180B
		SC110A	SC110B	SC130A	SC130B	SC180A	SC180B
F 10 2	i =	7.4_91.5	7.4_91.5				
F 20 2		6.4_114.3	6.4_114.3				
F 20 3		156.3_545.3	156.3_545.3				
F 25 2		6.9_44.4	6.9_44.4				
F 25 3		45.6_288.1	45.6_288.1				
F 25 4		393.9_1374	393.9_1374				
F 31 2		6.9_44.6	6.9_44.6	6.9_44.6			
F 31 3		47.5_374.4	47.5_374.4	47.5_374.4			
F 31 4		418.9_1539	418.9_1539				
F 41 2		6.7_47.9	6.7_47.9	6.7_47.9	6.7_47.9	6.7_47.9	6.7_47.9
F 41 3		51.5_344.8	51.5_344.8	51.5_344.8	51.5_168.7	51.5_168.7	51.5_168.7
F 41 4		433.7_1411	433.7_1411				
F 51 2		7.2_37.1	7.2_37.1	7.2_37.1	7.2_37.1	7.2_37.1	7.2_37.1
F 51 3		48.9_352.5	48.9_352.5	48.9_352.5	48.9_202.4	48.9_202.4	48.9_202.4
F 51 4		429.1_1439	429.1_1439	429.1_1439			
F 60 3		11.8_280.7 ⛔ (29.6_32.1)	11.8_280.7 ⛔ (29.6_32.1)	11.8_280.7 ⛔ (29.6_32.1)	9.0_201.4	9.0_201.4	9.0_201.4
F 60 4		315.4_1141	315.4_1141	315.4_1141			

65 TRÄGHEITSMOMENT

Die In den folgenden Tabellen angegebenen Trägheitsmomente Jr [kgm²] beziehen sich auf die Getriebeantriebsachse. Um das Lesen der Tabellen zu erleichtern, werden folgende Symbole verwendet:

Daten beziehen sich auf Kompaktgetriebe ohne Motor. Um das Gesamtträgheitsmoment des Getriebemotors zu ermitteln, muss nur das Trägheitsmoment des Getriebes mit dem Trägheitsmoment des entsprechenden Motors addiert werden (Wert Elektromotorenauswahltabellen entnehmen).

IEC — Nur Getriebe vorbereitet für IEC-Motor (IEC-Größe...).

Dieses Symbol bezieht sich auf Getriebewerte.

SERVO — Nur Getriebe vorbereitet für Servomotor.

F 10

	i	J (•10-4) [kgm2]							
			IEC						
			63	71	80	90	100	112	
F 10 2_7.4	7.4	1.0	1.8	1.8	3.8	3.7	4.9	4.9	1.7
F 10 2_8.6	8.6	0.77	1.5	1.5	3.6	3.5	4.7	4.7	1.5
F 10 2_9.8	9.8	0.64	1.4	1.4	3.4	3.3	4.5	4.5	1.3
F 10 2_11.5	11.5	0.48	1.2	1.2	3.3	3.2	4.4	4.4	1.2
F 10 2_13.0	13.0	0.38	1.1	1.1	3.2	3.1	4.3	4.3	1.1
F 10 2_14.6	14.6	0.61	1.4	1.4	3.4	3.3	4.5	4.5	1.3
F 10 2_17.0	17.0	0.48	1.3	1.2	3.3	3.2	4.4	4.4	1.2
F 10 2_19.3	19.3	0.41	1.2	1.2	3.2	3.1	4.3	4.3	1.1
F 10 2_22.8	22.8	0.32	1.1	1.1	3.1	3.0	4.2	4.2	1.0
F 10 2_25.8	25.8	0.25	1.0	1.0	3.1	2.9	4.1	4.1	0.93
F 10 2_29.6	29.6	0.19	1.0	0.95	3.0	2.9	4.1	4.1	0.87
F 10 2_33.0	33.0	0.16	0.93	0.92	3.0	2.8	4.1	4.1	0.84
F 10 2_35.3	35.3	0.14	0.92	0.90	3.0	2.8	4.0	4.0	0.83
F 10 2_39.6	39.6	0.12	0.90	0.88	2.9	2.8	4.0	4.0	0.80
F 10 2_44.7	44.7	0.10	0.88	0.86	2.9	2.8	4.0	4.0	0.79
F 10 2_48.7	48.7	0.09	0.86	0.85	2.9	2.8	4.0	4.0	0.77
F 10 2_56.7	56.7	0.07	0.84	0.83	2.9	2.7	4.0	4.0	0.75
F 10 2_63.0	63.0	0.06	0.83	0.82	2.9	2.7	3.9	3.9	0.74
F 10 2_71.1	71.1	0.05	0.82	0.81	2.8	2.7	3.9	3.9	0.73
F 10 2_81.3	81.3	0.04	0.78	0.77	2.8	2.7	3.9	3.9	0.67
F 10 2_91.5	91.5	0.03	0.78	0.76	2.8	2.7	3.9	3.9	0.66
F 10 2_106.0	106.0	0.03	0.77	0.76	—	—	—	—	0.66
F 10 2_127.1	127.1	0.02	0.76	0.75	—	—	—	—	0.65

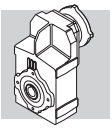

F 10

	i	J (•10-4) [kgm2]									
		SERVO									
		60A		60B 80A		95A		80C 95B 110A		95C 110B	
		SK	SC	SK	SC	SK	SC	SK	SC	SK	SC
F 10 2_7.4	7.4	1.3	1.5	1.3	1.7	3.8	4.3	3.8	4.3	3.7	4.7
F 10 2_8.6	8.6	1.0	1.3	1.1	1.5	3.6	4.0	3.6	4.1	3.5	4.5
F 10 2_9.8	9.8	0.91	1.2	0.93	1.4	3.5	3.9	3.4	3.9	3.3	4.3
F 10 2_11.5	11.5	0.75	1.0	0.77	1.2	3.3	3.7	3.3	3.8	3.2	4.2
F 10 2_13.0	13.0	0.65	0.91	0.67	1.1	3.2	3.6	3.2	3.7	3.1	4.1
F 10 2_14.6	14.6	0.88	1.1	0.91	1.3	3.4	3.9	3.4	3.9	3.3	4.3
F 10 2_17.0	17.0	0.75	1.0	0.77	1.2	3.3	3.7	3.3	3.8	3.2	4.2
F 10 2_19.3	19.3	0.68	0.94	0.70	1.1	3.2	3.7	3.2	3.7	3.1	4.1
F 10 2_22.8	22.8	0.59	0.85	0.61	1.0	3.1	3.6	3.1	3.6	3.0	4.0
F 10 2_25.8	25.8	0.52	0.78	0.54	0.98	3.1	3.5	3.1	3.6	2.9	3.9
F 10 2_29.6	29.6	0.46	0.72	0.48	0.92	3.0	3.4	3.0	3.5	2.9	3.9
F 10 2_33.0	33.0	0.43	0.69	0.45	0.89	3.0	3.4	3.0	3.5	2.8	3.8
F 10 2_35.3	35.3	0.41	0.67	0.43	0.87	3.0	3.4	3.0	3.5	2.8	3.8
F 10 2_39.6	39.6	0.39	0.65	0.41	0.85	2.9	3.3	2.9	3.4	2.8	3.8
F 10 2_44.7	44.7	0.37	0.63	0.39	0.83	2.9	3.4	2.9	3.4	2.8	3.8
F 10 2_48.7	48.7	0.36	0.62	0.38	0.82	2.9	3.3	2.9	3.4	2.8	3.8
F 10 2_56.7	56.7	0.34	0.60	0.36	0.80	2.9	3.3	2.9	3.4	2.7	3.7
F 10 2_63.0	63.0	0.33	0.59	0.35	0.79	2.9	3.3	2.9	3.4	2.7	3.7
F 10 2_71.1	71.1	0.32	0.58	0.34	0.78	2.9	3.3	2.8	3.3	2.7	3.7
F 10 2_81.3	81.3	0.31	0.57	—	—	—	—	2.8	3.3	2.7	3.7
F 10 2_91.5	91.5	0.30	0.56	—	—	—	—	2.8	3.3	2.7	3.7
F 10 2_106.0	106.0	0.30	0.56	—	—	—	—	—	—	—	—
F 10 2_127.1	127.1	0.29	0.55	—	—	—	—	—	—	—	—

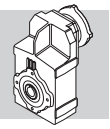

F 20

	i	J (•10-4) [kgm2]							
			IEC						
			63	71	80	90	100	112	
F 20 2_6.4	6.4	2.2	—	—	5.0	4.8	6.0	6.0	3.9
F 20 2_7.8	7.8	1.5	—	—	4.3	4.2	5.4	5.4	3.3
F 20 2_8.7	8.7	1.3	2.0	2.0	4.1	3.9	5.2	5.2	3.0
F 20 2_10.0	10.0	1.0	1.8	1.7	3.8	3.7	4.9	4.9	2.7
F 20 2_11.2	11.2	0.88	1.6	1.6	3.6	3.5	4.7	4.7	2.6
F 20 2_14.8	14.8	1.2	—	—	4.0	3.9	5.1	5.1	2.9
F 20 2_18.1	18.1	0.90	—	—	3.7	3.5	4.7	4.7	2.6
F 20 2_20.2	20.2	0.78	1.5	1.5	3.5	3.4	4.6	4.6	2.5
F 20 2_23.1	23.1	0.64	1.4	1.3	3.4	3.3	4.5	4.5	2.4
F 20 2_25.9	25.9	0.57	1.3	1.3	3.3	3.2	4.4	4.4	2.3
F 20 2_30.4	30.4	0.41	1.1	1.1	3.2	3.0	4.3	4.3	2.1
F 20 2_33.1	33.1	0.36	1.1	1.1	3.1	3.0	4.2	4.2	2.1
F 20 2_37.9	37.9	0.30	1.0	1.0	3.1	2.9	4.1	4.1	2.0
F 20 2_41.8	41.8	0.27	1.0	1.0	3.0	2.9	4.1	4.1	2.0
F 20 2_44.8	44.8	0.24	1.0	1.0	3.0	2.9	4.1	4.1	2.0
F 20 2_50.7	50.7	0.21	0.93	0.92	3.0	2.8	4.1	4.1	1.9
F 20 2_56.7	56.7	0.18	0.91	0.90	2.9	2.8	4.0	4.0	1.9
F 20 2_61.9	61.9	0.16	0.89	0.88	2.9	2.8	4.0	4.0	1.9
F 20 2_69.1	69.1	0.14	0.87	0.86	2.9	2.8	4.0	4.0	1.8
F 20 2_76.8	76.8	0.12	0.86	0.85	2.9	2.8	4.0	4.0	1.8
F 20 2_90.4	90.4	0.10	0.84	0.82	2.9	2.7	3.9	3.9	1.8
F 20 2_101.6	101.6	0.09	0.80	0.79	2.8	2.7	3.9	3.9	1.8
F 20 2_114.3	114.3	0.08	0.79	0.77	2.8	2.7	3.9	3.9	1.8
F 20 2_132.2	132.2	0.03	0.78	0.77	—	—	—	—	1.8
F 20 3_156.3	156.3	0.04	0.81	0.80	2.8	2.7	3.9	3.9	0.72
F 20 3_172.6	172.6	0.04	0.81	0.80	2.8	2.7	3.9	3.9	0.72
F 20 3_184.9	184.9	0.04	0.81	0.80	2.8	2.7	3.9	3.9	0.72
F 20 3_209.3	209.3	0.03	0.81	0.79	2.8	2.7	3.9	3.9	0.72
F 20 3_234.0	234.0	0.03	0.81	0.79	2.8	2.7	3.9	3.9	0.71
F 20 3_255.3	255.3	0.03	0.80	0.79	2.8	2.7	3.9	3.9	0.71
F 20 3_285.2	285.2	0.03	0.80	0.79	2.8	2.7	3.9	3.9	0.71
F 20 3_316.9	316.9	0.03	0.80	0.79	2.8	2.7	3.9	3.9	0.71
F 20 3_372.9	372.9	0.03	0.80	0.79	2.8	2.7	3.9	3.9	0.71
F 20 3_419.3	419.3	0.03	0.80	0.79	2.8	2.7	3.9	3.9	0.66
F 20 3_471.7	471.7	0.03	0.80	0.79	2.8	2.7	3.9	3.9	0.66
F 20 3_545.3	545.3	0.03	0.80	0.79	2.8	2.7	3.9	3.9	0.66

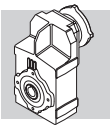

F 20

	i	J (•10-4) [kgm2]									
		SERVO									
		60A		60B 80A		95A		80C 95B 110A		95C 110B	
		SK	SC	SK	SC	SK	SC	SK	SC	SK	SC
F 20 2_6.4	6.4	—	—	—	—	—	—	5.0	5.5	4.8	5.8
F 20 2_7.8	7.8	—	—	—	—	—	—	4.3	4.8	4.2	5.2
F 20 2_8.7	8.7	1.6	1.8	1.6	2.0	4.1	4.6	4.1	4.6	3.9	4.9
F 20 2_10.0	10.0	1.3	1.5	1.3	1.7	3.8	4.3	3.8	4.3	3.7	4.7
F 20 2_11.2	11.2	1.2	1.4	1.2	1.6	3.7	4.1	3.6	4.1	3.5	4.5
F 20 2_14.8	14.8	—	—	—	—	—	—	4.0	4.5	3.9	4.9
F 20 2_18.1	18.1	—	—	—	—	—	—	3.7	4.2	3.5	4.5
F 20 2_20.2	20.2	1.1	1.3	1.1	1.5	3.6	4.0	3.5	4.0	3.4	4.4
F 20 2_23.1	23.1	0.91	1.2	0.93	1.4	3.5	3.9	3.4	3.9	3.3	4.3
F 20 2_25.9	25.9	0.84	1.1	0.86	1.3	3.4	3.8	3.3	3.8	3.2	4.2
F 20 2_30.4	30.4	0.68	0.94	0.70	1.1	3.2	3.7	3.2	3.7	3.0	4.0
F 20 2_33.1	33.1	0.63	0.89	0.65	1.1	3.2	3.6	3.1	3.6	3.0	4.0
F 20 2_37.9	37.9	0.47	0.83	0.59	1.0	3.1	3.6	3.1	3.6	2.9	3.9
F 20 2_41.8	41.8	0.44	0.80	0.56	1.0	3.1	3.5	3.0	3.5	2.9	3.9
F 20 2_44.8	44.8	0.41	0.77	0.53	0.97	3.1	3.5	3.0	3.5	2.9	3.9
F 20 2_50.7	50.7	0.48	0.74	0.50	0.94	3.0	3.5	3.0	3.5	2.8	3.8
F 20 2_56.7	56.7	0.45	0.71	0.47	0.91	3.0	3.4	2.9	3.4	2.8	3.8
F 20 2_61.9	61.9	0.43	0.69	0.45	0.89	3.0	3.4	2.9	3.4	2.8	3.8
F 20 2_69.1	69.1	0.41	0.67	0.43	0.87	3.0	3.4	2.9	3.4	2.8	3.8
F 20 2_76.8	76.8	0.39	0.65	0.41	0.85	2.9	3.4	2.9	3.4	2.8	3.8
F 20 2_90.4	90.4	0.37	0.63	0.39	0.83	2.9	3.4	2.9	3.4	2.7	3.7
F 20 2_101.6	101.6	0.36	0.62	—	—	—	—	2.8	3.3	2.7	3.7
F 20 2_114.3	114.3	0.35	0.61	—	—	—	—	2.8	3.3	2.7	3.7
F 20 2_132.2	132.2	0.30	0.56	—	—	—	—	—	—	—	—
F 20 3_156.3	156.3	0.31	0.57	0.33	0.77	2.9	3.3	2.8	3.3	2.7	3.7
F 20 3_172.6	172.6	0.31	0.57	0.33	0.77	2.9	3.3	2.8	3.3	2.7	3.7
F 20 3_184.9	184.9	0.31	0.57	0.33	0.77	2.9	3.3	2.8	3.3	2.7	3.7
F 20 3_209.3	209.3	0.30	0.56	0.32	0.76	2.9	3.3	2.8	3.3	2.7	3.7
F 20 3_234.0	234.0	0.30	0.56	0.32	0.76	2.9	3.3	2.8	3.3	2.7	3.7
F 20 3_255.3	255.3	0.30	0.56	0.32	0.76	2.9	3.3	2.8	3.3	2.7	3.7
F 20 3_285.2	285.2	0.30	0.56	0.32	0.76	2.9	3.3	2.8	3.3	2.7	3.7
F 20 3_316.9	316.9	0.30	0.56	0.32	0.76	2.9	3.3	2.8	3.3	2.7	3.7
F 20 3_372.9	372.9	0.30	0.56	0.32	0.76	2.9	3.3	2.8	3.3	2.7	3.7
F 20 3_419.3	419.3	0.30	0.56	0.32	0.76	2.9	3.3	2.8	3.3	2.7	3.7
F 20 3_471.7	471.7	0.30	0.56	0.32	0.76	2.9	3.3	2.8	3.3	2.7	3.7
F 20 3_545.3	545.3	0.30	0.56	0.32	0.76	2.9	3.3	2.8	3.3	2.7	3.7

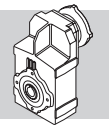

F 25

	i	J (•10-4) [kgm2]							
			IEC						
			63	71	80	90	100	112	
F 25 2_6.9	6.9	2.7	—	—	5.4	5.3	6.5	6.5	4.4
F 25 2_8.4	8.4	1.9	—	—	4.6	4.5	5.7	5.7	3.6
F 25 2_9.4	9.4	1.6	2.3	2.3	4.3	4.2	5.4	5.4	3.3
F 25 2_10.6	10.6	1.9	—	—	4.6	4.5	5.7	5.7	3.6
F 25 2_13.0	13.0	1.3	—	—	4.1	4.0	5.2	5.2	3.0
F 25 2_14.5	14.5	1.1	1.8	1.8	3.9	3.8	5.0	5.0	2.8
F 25 2_16.6	16.6	0.90	1.6	1.6	3.7	3.5	4.7	4.7	2.6
F 25 2_18.6	18.6	0.77	1.5	1.5	3.5	3.4	4.6	4.6	2.5
F 25 2_21.8	21.8	0.57	1.3	1.3	3.3	3.2	4.4	4.4	2.3
F 25 2_23.8	23.8	0.48	1.2	1.2	3.2	3.1	4.3	4.3	2.2
F 25 2_27.2	27.2	0.40	1.1	1.1	3.2	3.0	4.2	4.2	2.1
F 25 2_30.0	30.0	0.35	1.1	1.1	3.1	3.0	4.2	4.2	2.1
F 25 2_32.2	32.2	0.31	1.0	1.0	3.1	2.9	4.2	4.2	2.0
F 25 2_36.4	36.4	0.26	1.0	1.0	3.0	2.9	4.1	4.1	2.0
F 25 2_40.7	40.7	0.22	1.0	0.94	3.0	2.9	4.1	4.1	1.9
F 25 2_44.4	44.4	0.20	0.93	0.92	3.0	2.8	4.0	4.0	1.9
F 25 3_45.6	45.6	0.79	—	—	3.6	3.4	4.6	4.6	2.5
F 25 3_50.8	50.8	0.70	1.4	1.4	3.5	3.3	4.5	4.5	2.4
F 25 3_58.3	58.3	0.58	1.3	1.3	3.3	3.2	4.4	4.4	2.3
F 25 3_65.3	65.3	0.52	1.2	1.2	3.3	3.1	4.4	4.4	2.2
F 25 3_76.6	76.6	0.38	1.1	1.1	3.1	3.0	4.2	4.2	2.1
F 25 3_83.4	83.4	0.32	1.0	1.0	3.1	3.0	4.2	4.2	2.0
F 25 3_95.5	95.5	0.28	1.0	1.0	3.0	2.9	4.1	4.1	2.0
F 25 3_105.4	105.4	0.25	1.0	1.0	3.0	2.9	4.1	4.1	2.0
F 25 3_113.0	113.0	0.23	0.95	0.94	3.0	2.9	4.1	4.1	1.9
F 25 3_127.8	127.8	0.20	0.92	0.91	3.0	2.8	4.0	4.0	1.9
F 25 3_143.0	143.0	0.17	0.90	0.89	2.9	2.8	4.0	4.0	1.9
F 25 3_155.9	155.9	0.15	0.88	0.87	2.9	2.8	4.0	4.0	1.9
F 25 3_174.2	174.2	0.13	0.87	0.86	2.9	2.8	4.0	4.0	1.8
F 25 3_193.6	193.6	0.12	0.85	0.84	2.9	2.7	4.0	4.0	1.8
F 25 3_227.8	227.8	0.10	0.83	0.82	2.9	2.7	3.9	3.9	1.8
F 25 3_256.1	256.1	0.09	0.79	0.78	2.8	2.7	3.9	3.9	1.8
F 25 3_288.1	288.1	0.08	0.78	0.77	2.8	2.7	3.9	3.9	1.8
F 25 3_333.1	333.1	0.03	0.78	0.76	—	—	—	—	1.8
F 25 4_393.9	393.9	0.02	0.80	0.78	2.8	2.7	3.9	3.9	0.70
F 25 4_434.9	434.9	0.02	0.79	0.78	2.8	2.7	3.9	3.9	0.70
F 25 4_466.0	466.0	0.02	0.79	0.78	2.8	2.7	3.9	3.9	0.70
F 25 4_527.3	527.3	0.02	0.79	0.78	2.8	2.7	3.9	3.9	0.70
F 25 4_589.7	589.7	0.02	0.79	0.78	2.8	2.7	3.9	3.9	0.70
F 25 4_643.3	643.3	0.02	0.79	0.78	2.8	2.7	3.9	3.9	0.70
F 25 4_718.7	718.7	0.02	0.79	0.78	2.8	2.7	3.9	3.9	0.70
F 25 4_798.5	798.5	0.01	0.79	0.77	2.8	2.7	3.9	3.9	0.70
F 25 4_939.8	939.8	0.01	0.79	0.77	2.8	2.7	3.9	3.9	0.69
F 25 4_1057	1057	0.01	0.79	0.77	2.8	2.7	3.9	3.9	0.64
F 25 4_1189	1189	0.01	0.78	0.77	2.8	2.7	3.9	3.9	0.64
F 25 4_1374	1374	0.01	0.78	0.77	2.8	2.7	3.9	3.9	0.64

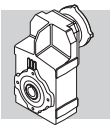

F 25

	i	J (•10-4) [kgm2]									
		SERVO									
		60A		60B 80A		95A		80C 95B 110A		95C 110B	
		SK	SC	SK	SC	SK	SC	SK	SC	SK	SC
F 25 2_6.9	6.9	—	—	—	—	—	—	5.4	5.9	5.3	6.3
F 25 2_8.4	8.4	—	—	—	—	—	—	4.6	5.1	4.5	5.5
F 25 2_9.4	9.4	1.9	2.1	1.9	2.3	4.4	4.9	4.3	4.8	4.2	5.2
F 25 2_10.6	10.6	—	—	—	—	—	—	4.6	5.1	4.5	5.5
F 25 2_13.0	13.0	—	—	—	—	—	—	4.1	4.6	4.0	5.0
F 25 2_14.5	14.5	1.4	1.6	1.4	1.8	3.9	4.4	3.9	4.4	3.8	4.8
F 25 2_16.6	16.6	1.2	1.4	1.2	1.6	3.7	4.2	3.7	4.2	3.5	4.5
F 25 2_18.6	18.6	1.0	1.3	1.1	1.5	3.6	4.0	3.5	4.0	3.4	4.4
F 25 2_21.8	21.8	0.84	1.1	0.86	1.3	3.4	3.8	3.3	3.8	3.2	4.2
F 25 2_23.8	23.8	0.75	1.0	0.77	1.2	3.3	3.7	3.2	3.7	3.1	4.1
F 25 2_27.2	27.2	0.67	0.93	0.69	1.1	3.2	3.7	3.2	3.7	3.0	4.0
F 25 2_30.0	30.0	0.62	0.88	0.64	1.1	3.2	3.6	3.1	3.6	3.0	4.0
F 25 2_32.2	32.2	0.58	0.84	1.4	1.8	3.1	3.6	3.1	3.6	2.9	3.9
F 25 2_36.4	36.4	0.53	0.79	0.55	0.99	3.1	3.5	3.0	3.5	2.9	3.9
F 25 2_40.7	40.7	0.49	0.75	0.51	0.95	3.0	3.5	3.0	3.5	2.9	3.9
F 25 2_44.4	44.4	0.47	0.73	0.49	0.93	3.0	3.5	3.0	3.5	2.8	3.8
F 25 3_45.6	45.6	1.1	1.3	1.1	1.5	3.6	4.0	3.6	4.1	3.4	4.4
F 25 3_50.8	50.8	0.97	1.2	0.99	1.4	3.5	4.0	3.5	4.0	3.3	4.3
F 25 3_58.3	58.3	0.85	1.1	0.87	1.3	3.4	3.8	3.3	3.8	3.2	4.2
F 25 3_65.3	65.3	0.79	1.1	0.84	1.2	3.3	3.8	3.3	3.8	3.1	4.1
F 25 3_76.6	76.6	0.65	0.91	0.67	1.1	3.2	3.6	3.1	3.6	3.0	4.0
F 25 3_83.4	83.4	0.59	0.85	0.61	1.0	3.1	3.6	3.1	3.6	3.0	4.0
F 25 3_95.5	95.5	0.55	0.81	0.57	1.0	3.1	3.5	3.0	3.5	2.9	3.9
F 25 3_105.4	105.4	0.52	0.78	0.54	0.98	3.1	3.5	3.0	3.5	2.9	3.9
F 25 3_113.0	113.0	0.50	0.76	0.52	0.96	3.1	3.5	3.0	3.5	2.9	3.9
F 25 3_127.8	127.8	0.47	0.73	0.49	0.93	3.0	3.5	3.0	3.5	2.8	3.8
F 25 3_143.0	143.0	0.44	0.70	0.46	0.90	3.0	3.4	2.9	3.4	2.8	3.8
F 25 3_155.9	155.9	0.42	0.68	0.44	0.88	3.0	3.4	2.9	3.4	2.8	3.8
F 25 3_174.2	174.2	0.40	0.66	0.42	0.86	3.0	3.4	2.9	3.4	2.8	3.8
F 25 3_193.6	193.6	0.39	0.65	0.41	0.85	2.9	3.4	2.9	3.4	2.7	3.7
F 25 3_227.8	227.8	0.37	0.63	0.39	0.83	2.9	3.4	2.9	3.4	2.7	3.7
F 25 3_256.1	256.1	0.36	0.62	—	—	—	—	2.8	3.3	2.7	3.7
F 25 3_288.1	288.1	0.35	0.61	—	—	—	—	2.8	3.3	2.7	3.7
F 25 3_333.1	333.1	0.30	0.56	—	—	—	—	—	—	—	—
F 25 4_393.9	393.9	0.29	0.55	0.31	0.75	2.8	3.3	2.8	3.3	2.7	3.7
F 25 4_434.9	434.9	0.29	0.55	0.31	0.75	2.8	3.3	2.8	3.3	2.7	3.7
F 25 4_466.0	466.0	0.29	0.55	0.31	0.75	2.8	3.3	2.8	3.3	2.7	3.7
F 25 4_527.3	527.3	0.29	0.55	0.31	0.75	2.8	3.3	2.8	3.3	2.7	3.7
F 25 4_589.7	589.7	0.29	0.55	0.31	0.75	2.8	3.3	2.8	3.3	2.7	3.7
F 25 4_643.3	643.3	0.29	0.55	0.31	0.75	2.8	3.3	2.8	3.3	2.7	3.7
F 25 4_718.7	718.7	0.29	0.55	0.31	0.75	2.8	3.3	2.8	3.3	2.7	3.7
F 25 4_798.5	798.5	0.28	0.54	0.30	0.74	2.8	3.3	2.8	3.3	2.7	3.7
F 25 4_939.8	939.8	0.28	0.54	0.30	0.74	2.8	3.3	2.8	3.3	2.7	3.7
F 25 4_1057	1057	0.28	0.54	0.30	0.74	2.8	3.3	2.8	3.3	2.7	3.7
F 25 4_1189	1189	0.28	0.54	0.30	0.74	2.8	3.3	2.8	3.3	2.7	3.7
F 25 4_1374	1374	0.28	0.54	0.30	0.74	2.8	3.3	2.8	3.3	2.7	3.7

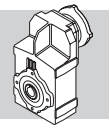

F 31

	i	J (•10-4) [kgm2]								
			IEC							
			63	71	80	90	100	112	132	
F 31 2_6.9	6.9	5.0	—	—	7.8	7.6	8.9	8.9	22	7.1
F 31 2_8.2	8.2	3.7	—	—	6.5	6.3	7.5	7.5	20	5.8
F 31 2_9.0	9.0	3.2	—	—	6.0	5.8	7.0	7.0	20	5.3
F 31 2_10.7	10.7	3.5	—	—	6.3	6.2	7.4	7.4	20	5.6
F 31 2_12.7	12.7	2.6	—	—	5.4	5.3	6.5	6.5	19	4.7
F 31 2_13.9	13.9	2.3	—	—	5.1	4.9	6.2	6.2	19	4.4
F 31 2_16.8	16.8	1.8	—	—	4.6	4.4	5.6	5.6	18	3.9
F 31 2_18.5	18.5	1.5	2.2	2.2	4.2	4.1	5.3	5.3	18	3.5
F 31 2_21.1	21.1	1.1	1.8	1.8	3.9	3.7	5.0	5.0	18	3.2
F 31 2_23.4	23.4	1.0	1.7	1.7	3.7	3.6	4.8	4.8	18	3.0
F 31 2_27.3	27.3	0.78	1.5	1.5	3.5	3.4	4.6	4.6	17	2.8
F 31 2_30.1	30.1	0.65	1.4	1.4	3.4	3.3	4.5	4.5	17	2.7
F 31 2_34.4	34.4	0.53	1.3	1.2	3.3	3.2	4.4	4.4	17	2.6
F 31 2_37.7	37.7	0.47	1.2	1.2	3.2	3.1	4.3	4.3	17	2.5
F 31 2_40.4	40.4	0.42	1.1	1.1	3.2	3.0	4.3	4.3	—	2.5
F 31 2_44.6	44.6	0.37	1.1	1.1	3.1	3.0	4.2	4.2	—	2.4
F 31 3_47.5	47.5	1.6	—	—	4.3	4.2	5.4	5.4	18	3.6
F 31 3_52.1	52.1	1.4	—	—	4.2	4.0	5.3	5.3	18	3.5
F 31 3_62.8	62.8	1.2	—	—	3.9	3.8	5.0	5.0	18	3.2
F 31 3_69.1	69.1	1.0	1.7	1.7	3.7	3.6	4.8	4.8	18	3.0
F 31 3_78.9	78.9	0.72	1.4	1.4	3.5	3.4	4.6	4.6	17	2.8
F 31 3_87.4	87.4	0.66	1.4	1.4	3.4	3.3	4.5	4.5	17	2.7
F 31 3_101.9	101.9	0.54	1.3	1.2	3.3	3.2	4.4	4.4	17	2.6
F 31 3_112.5	112.5	0.46	1.2	1.2	3.2	3.1	4.3	4.3	17	2.5
F 31 3_128.4	128.4	0.38	1.1	1.1	3.1	3.0	4.2	4.2	17	2.4
F 31 3_140.7	140.7	0.35	1.1	1.1	3.1	3.0	4.2	4.2	17	2.4
F 31 3_150.8	150.8	0.31	1.0	1.0	3.1	2.9	4.2	4.2	—	2.4
F 31 3_166.8	166.8	0.28	1.0	1.0	3.0	2.9	4.1	4.1	—	2.3
F 31 3_185.4	185.4	0.24	1.0	1.0	3.0	2.9	4.1	4.1	—	2.3
F 31 3_202.3	202.3	0.21	0.94	0.93	3.0	2.8	4.1	4.1	—	2.3
F 31 3_228.2	228.2	0.18	0.92	0.90	2.9	2.8	4.0	4.0	—	2.2
F 31 3_253.6	253.6	0.16	0.89	0.88	2.9	2.8	4.0	4.0	—	2.2
F 31 3_293.8	293.8	0.13	0.86	0.85	2.9	2.8	4.0	4.0	—	2.2
F 31 3_332.8	332.8	0.11	0.82	0.81	2.9	2.7	4.0	4.0	—	2.2
F 31 3_374.4	374.4	0.10	0.81	0.79	2.9	2.7	3.9	3.9	—	2.2
F 31 4_418.9	418.9	0.09	0.86	0.85	2.9	2.8	3.9	3.9	—	0.77
F 31 4_462.6	462.6	0.08	0.86	0.84	2.9	2.7	3.9	3.9	—	0.77
F 31 4_527.8	527.8	0.08	0.85	0.84	2.9	2.7	3.9	3.9	—	0.76
F 31 4_578.6	578.6	0.08	0.85	0.84	2.9	2.7	3.9	3.9	—	0.76
F 31 4_619.9	619.9	0.07	0.85	0.83	2.9	2.7	3.9	3.9	—	0.76
F 31 4_685.6	685.6	0.07	0.85	0.83	2.9	2.7	3.9	3.9	—	0.76
F 31 4_762.3	762.3	0.07	0.84	0.83	2.9	2.7	3.9	3.9	—	0.75
F 31 4_831.6	831.6	0.07	0.84	0.83	2.9	2.7	3.9	3.9	—	0.75
F 31 4_938.2	938.2	0.07	0.84	0.83	2.9	2.7	3.9	3.9	—	0.75
F 31 4_1042	1042	0.07	0.84	0.83	2.9	2.7	3.9	3.9	—	0.75
F 31 4_1208	1208	0.06	0.84	0.82	2.9	2.7	3.9	3.9	—	0.75
F 31 4_1368	1368	0.06	0.84	0.82	2.9	2.7	3.9	3.9	—	0.75
F 31 4_1539	1539	0.06	0.84	0.82	2.9	2.7	3.9	3.9	—	0.75

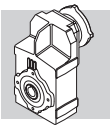

F 31

	i	J (•10-4) [kgm2]											
		SERVO											
		60A		60B 80A		95A		80C 95B 110A		95C 110B		130A	
		SK	SC	SK	SC	SK	SC	SK	SC	SK	SC	SK	SC
F 31 2_6.9	6.9	—	—	—	—	—	—	7.8	8.3	7.6	8.6	7.6	8.6
F 31 2_8.2	8.2	—	—	—	—	—	—	6.5	7.0	6.3	7.3	6.3	7.3
F 31 2_9.0	9.0	—	—	—	—	—	—	6.0	6.5	5.8	6.8	5.8	6.8
F 31 2_10.7	10.7	—	—	—	—	—	—	6.3	6.8	6.2	7.2	6.2	7.2
F 31 2_12.7	12.7	—	—	—	—	—	—	5.4	5.9	5.3	6.3	5.3	6.3
F 31 2_13.9	13.9	—	—	—	—	—	—	5.1	5.6	4.9	5.9	4.9	5.9
F 31 2_16.8	16.8	—	—	—	—	—	—	4.6	5.1	4.4	5.4	4.4	5.4
F 31 2_18.5	18.5	1.8	2.0	1.8	2.2	4.3	4.8	4.2	4.7	4.1	5.1	4.1	5.1
F 31 2_21.1	21.1	1.4	1.6	1.4	1.8	3.9	4.3	3.9	4.4	3.7	4.7	3.7	4.7
F 31 2_23.4	23.4	1.3	1.5	1.3	1.7	3.8	4.3	3.7	4.2	3.6	4.6	3.6	4.6
F 31 2_27.3	27.3	1.1	1.3	1.1	1.5	3.6	4.0	3.5	4.0	3.4	4.4	3.4	4.4
F 31 2_30.1	30.1	0.92	1.2	0.94	1.4	3.5	3.9	3.4	3.9	3.3	4.3	3.3	4.3
F 31 2_34.4	34.4	0.80	1.1	0.82	1.3	3.4	3.8	3.3	3.8	3.2	4.2	3.2	4.2
F 31 2_37.7	37.7	0.74	1.0	0.76	1.2	3.3	3.7	3.2	3.7	3.1	4.1	3.1	4.1
F 31 2_40.4	40.4	0.69	0.95	0.71	1.1	3.2	3.7	3.2	3.7	3.0	4.0	3.0	4.0
F 31 2_44.6	44.6	0.64	0.90	0.66	1.1	3.2	3.6	3.1	3.6	3.0	4.0	3.0	4.0
F 31 3_47.5	47.5	—	—	—	—	—	—	4.3	4.8	4.2	5.2	4.2	5.2
F 31 3_52.1	52.1	—	—	—	—	—	—	4.2	4.7	4.0	5.0	4.0	5.0
F 31 3_62.8	62.8	—	—	—	—	—	—	3.9	4.4	3.8	4.8	3.8	4.8
F 31 3_69.1	69.1	1.3	1.5	1.3	1.7	3.8	4.3	3.7	4.2	3.6	4.6	3.6	4.6
F 31 3_78.9	78.9	0.99	1.3	1.0	1.4	3.5	4.0	3.5	4.0	3.4	4.4	3.4	4.4
F 31 3_87.4	87.4	0.93	1.2	0.95	1.4	3.5	3.9	3.4	3.9	3.3	4.3	3.3	4.3
F 31 3_101.9	101.9	0.81	1.1	0.83	1.3	3.4	3.8	3.3	3.8	3.2	4.2	3.2	4.2
F 31 3_112.5	112.5	0.73	0.99	0.75	1.2	3.3	3.7	3.2	3.7	3.1	4.1	3.1	4.1
F 31 3_128.4	128.4	0.65	0.91	0.67	1.1	3.2	3.6	3.1	3.6	3.0	4.0	3.0	4.0
F 31 3_140.7	140.7	0.62	0.88	0.64	1.1	3.2	3.6	3.1	3.6	3.0	4.0	3.0	4.0
F 31 3_150.8	150.8	0.58	0.84	0.60	1.0	3.1	3.6	3.1	3.6	2.9	3.9	2.9	3.9
F 31 3_166.8	166.8	0.55	0.81	0.57	1.0	3.1	3.5	3.0	3.5	2.9	3.9	2.9	3.9
F 31 3_185.4	185.4	0.51	0.77	0.53	0.97	3.1	3.5	3.0	3.5	2.9	3.9	2.9	3.9
F 31 3_202.3	202.3	0.48	0.74	0.50	0.93	3.0	3.5	3.0	3.5	2.8	3.8	2.8	3.8
F 31 3_228.2	228.2	0.45	0.71	0.47	0.91	3.0	3.4	2.9	3.4	2.8	3.8	2.8	3.8
F 31 3_253.6	253.6	0.43	0.69	0.45	0.89	3.0	3.4	2.9	3.4	2.8	3.8	2.8	3.8
F 31 3_293.8	293.8	0.40	0.66	0.42	0.86	3.0	3.4	2.9	3.4	2.8	3.8	2.8	3.8
F 31 3_332.8	332.8	0.38	0.64	—	—	—	—	2.9	3.4	2.7	3.7	2.7	3.7
F 31 3_374.4	374.4	0.37	0.63	—	—	—	—	2.9	3.4	2.7	3.7	2.7	3.7
F 31 4_418.9	418.9	0.36	0.62	0.38	0.82	2.9	3.3	2.9	3.4	2.8	3.8	—	—
F 31 4_462.6	462.6	0.35	0.61	0.37	0.81	2.9	3.3	2.9	3.4	2.7	3.7	—	—
F 31 4_527.8	527.8	0.35	0.61	0.37	0.81	2.9	3.3	2.9	3.4	2.7	3.7	—	—
F 31 4_578.6	578.6	0.35	0.61	0.37	0.81	2.9	3.3	2.9	3.4	2.7	3.7	—	—
F 31 4_619.9	619.9	0.34	0.60	0.36	0.80	2.9	3.3	2.9	3.4	2.7	3.7	—	—
F 31 4_685.6	685.6	0.34	0.60	0.36	0.80	2.9	3.3	2.9	3.4	2.7	3.7	—	—
F 31 4_762.3	762.3	0.34	0.60	0.36	0.80	2.9	3.3	2.9	3.4	2.7	3.7	—	—
F 31 4_831.6	831.6	0.34	0.60	0.36	0.80	2.9	3.3	2.9	3.4	2.7	3.7	—	—
F 31 4_938.2	938.2	0.34	0.60	0.36	0.80	2.9	3.3	2.9	3.4	2.7	3.7	—	—
F 31 4_1042	1042	0.34	0.60	0.36	0.80	2.9	3.3	2.9	3.4	2.7	3.7	—	—
F 31 4_1208	1208	0.33	0.59	0.35	0.79	2.9	3.3	2.9	3.4	2.7	3.7	—	—
F 31 4_1368	1368	0.33	0.59	0.35	0.79	2.9	3.3	2.9	3.4	2.7	3.7	—	—
F 31 4_1539	1539	0.83	0.59	0.35	0.79	2.9	3.3	2.9	3.4	2.7	3.7	—	—

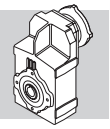

F 41

	i	J (•10-4) [kgm2]								
			IEC							
			63	71	80	90	100	112	132	
F 41 2_6.7	6.7	12	—	—	15	15	18	18	29	21
F 41 2_9.1	9.1	7.2	—	—	10	9.8	13	13	24	16
F 41 2_10.8	10.8	8.0	—	—	11	11	13	13	25	17
F 41 2_14.6	14.6	5.0	—	—	7.7	7.6	10	10	21	14
F 41 2_17.1	17.1	3.5	—	—	6.3	6.2	8.9	8.9	20	12
F 41 2_18.9	18.9	3.1	—	—	5.8	5.7	8.5	8.5	20	12
F 41 2_24.1	24.1	2.1	2.8	2.8	4.9	4.8	7.5	7.5	19	11
F 41 2_30.1	30.1	1.5	2.2	2.2	4.3	4.2	6.9	6.9	18	10
F 41 2_38.2	38.2	0.95	1.7	1.7	3.7	3.6	6.3	6.3	17	9.7
F 41 2_47.9	47.9	0.67	1.4	1.4	3.4	3.3	6.0	6.0	17	9.5
F 41 3_51.5	51.5	3.0	—	—	5.7	5.6	8.4	8.4	19	12
F 41 3_60.2	60.2	2.1	—	—	4.9	4.7	7.5	7.5	19	11
F 41 3_66.5	66.5	1.9	—	—	4.7	4.5	7.3	7.3	18	11
F 41 3_84.9	84.9	1.4	2.1	2.1	4.2	4.0	6.8	6.8	18	10
F 41 3_106.0	106.0	1.1	1.8	1.7	3.8	3.7	6.4	6.4	18	9.8
F 41 3_134.4	134.4	0.66	1.4	1.4	3.4	3.3	6.0	6.0	17	9.4
F 41 3_168.7	168.7	0.49	1.2	1.2	3.2	3.1	5.9	5.9	17	9.3
F 41 3_180.7	180.7	0.43	1.1	1.1	3.2	3.1	5.8	5.8	—	9.2
F 41 3_198.9	198.9	0.39	1.1	1.1	3.1	3.0	5.8	5.8	—	9.2
F 41 3_220.1	220.1	0.36	1.1	1.1	3.1	3.0	5.7	5.7	—	9.1
F 41 3_240.1	240.1	0.31	1.0	1.0	3.1	2.9	5.7	5.7	—	9.1
F 41 3_266.9	266.9	0.28	1.0	1.0	3.0	2.9	5.7	5.7	—	9.1
F 41 3_296.6	296.6	0.23	1.0	1.0	3.0	2.9	5.6	5.6	—	9.0
F 41 3_344.8	344.8	0.19	0.92	0.91	2.9	2.8	5.6	5.6	—	9.0
F 41 4_433.7	433.7	0.21	0.94	0.93	3.0	2.8	4.1	4.1	—	1.9
F 41 4_549.8	549.8	0.19	0.92	0.90	2.9	2.8	4.0	4.0	—	1.9
F 41 4_690.1	690.1	0.18	0.91	0.89	2.9	2.8	4.0	4.0	—	1.9
F 41 4_739.4	739.4	0.17	0.90	0.89	2.9	2.8	4.0	4.0	—	1.9
F 41 4_813.8	813.8	0.17	0.90	0.89	2.9	2.8	4.0	4.0	—	1.9
F 41 4_900.5	900.5	0.17	0.90	0.89	2.9	2.8	4.0	4.0	—	1.9
F 41 4_982.4	982.4	0.17	0.90	0.88	2.9	2.8	4.0	4.0	—	1.9
F 41 4_1092	1092	0.16	0.89	0.88	2.9	2.8	4.0	4.0	—	1.9
F 41 4_1213	1213	0.16	0.89	0.88	2.9	2.8	4.0	4.0	—	1.9
F 41 4_1411	1411	0.16	0.89	0.88	2.9	2.8	4.0	4.0	—	1.9

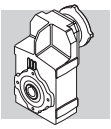

F 41

	i	J (•10-4) [kgm2]																	
		 SERVO																	
		60A		60B 80A		80B		95A		80C 95B 110A		95C 110B		130A		130B 180A		180B	
		SK	SC	SK	SC	SK	SC	SK	SC	SK	SC	SK	SC	SK	SC	SK	SC	SK	SC
F 41 2_6.7	6.7	—	—	—	—	—	—	—	—	15	16	15	16	15	16	29	31	29	34
F 41 2_9.1	9.1	—	—	—	—	—	—	—	—	10	11	9.8	11	9.8	11	24	27	24	29
F 41 2_10.8	10.8	—	—	—	—	—	—	—	—	11	12	11	12	11	12	25	27	25	30
F 41 2_14.6	14.6	—	—	—	—	—	—	—	—	7.7	8.2	7.6	8.6	7.6	8.6	22	24	21	26
F 41 2_17.1	17.1	—	—	—	—	—	—	—	—	6.3	6.8	6.2	7.2	6.2	7.2	20	23	20	25
F 41 2_18.9	18.9	—	—	—	—	—	—	—	—	5.8	6.3	5.7	6.7	5.7	6.7	20	23	20	25
F 41 2_24.1	24.1	—	—	—	—	4.9	5.4	4.9	5.4	4.9	5.4	4.8	5.8	4.8	5.8	19	22	19	24
F 41 2_30.1	30.1	—	—	—	—	4.3	4.8	4.3	4.8	4.3	4.8	4.2	5.2	4.2	5.2	18	21	18	23
F 41 2_38.2	38.2	—	—	—	—	3.8	4.2	3.8	4.2	3.7	4.2	3.6	4.6	3.6	4.6	18	20	17	22
F 41 2_47.9	47.9	—	—	—	—	3.5	3.9	3.5	3.9	3.4	3.9	3.3	4.3	3.3	4.3	18	20	17	22
F 41 3_51.5	51.5	—	—	—	—	—	—	—	—	5.7	6.2	5.6	6.6	5.6	6.6	20	22	19	24
F 41 3_60.2	60.2	—	—	—	—	—	—	—	—	4.9	5.4	4.7	5.7	4.7	5.7	19	22	19	24
F 41 3_66.5	66.5	—	—	—	—	—	—	—	—	4.7	5.2	4.5	5.5	4.5	5.5	19	21	18	23
F 41 3_84.9	84.9	—	—	—	—	4.2	4.7	4.2	4.7	4.2	4.7	4.0	5.0	4.0	5.0	18	21	18	23
F 41 3_106.0	106.0	—	—	—	—	3.9	4.4	3.9	4.4	3.8	4.3	3.7	4.7	3.7	4.7	18	21	18	23
F 41 3_134.4	134.4	—	—	—	—	3.5	3.9	3.5	3.9	3.4	3.9	3.3	4.3	3.3	4.3	18	20	17	22
F 41 3_168.7	168.7	—	—	—	—	3.3	3.7	3.3	3.7	3.2	3.7	3.1	4.1	3.1	4.1	17	20	17	22
F 41 3_180.7	180.7	—	—	—	—	3.3	3.7	3.3	3.7	3.2	3.7	3.1	4.1	3.1	4.1	—	—	—	—
F 41 3_198.9	198.9	—	—	—	—	3.2	3.6	3.2	3.6	3.1	3.6	3.0	4.0	3.0	4.0	—	—	—	—
F 41 3_220.1	220.1	—	—	—	—	3.2	3.6	3.2	3.6	3.1	3.6	3.0	4.0	3.0	4.0	—	—	—	—
F 41 3_240.1	240.1	—	—	—	—	3.1	3.6	3.1	3.6	3.1	3.6	2.9	3.9	2.9	3.9	—	—	—	—
F 41 3_266.9	266.9	—	—	—	—	3.1	3.5	3.1	3.5	3.0	3.5	2.9	3.9	2.9	3.9	—	—	—	—
F 41 3_296.6	296.6	—	—	—	—	3.1	3.5	3.1	3.5	3.0	3.5	2.9	3.9	2.9	3.9	—	—	—	—
F 41 3_344.8	344.8	—	—	—	—	3.0	3.4	3.0	3.4	2.9	3.4	2.8	3.8	2.8	3.8	—	—	—	—
F 41 4_433.7	433.7	0.48	0.74	0.50	0.94	—	—	3.0	3.5	3.0	3.5	2.8	3.8	—	—	—	—	—	—
F 41 4_549.8	549.8	0.46	0.72	0.48	0.92	—	—	3.0	3.4	2.9	3.4	2.8	3.8	—	—	—	—	—	—
F 41 4_690.1	690.1	0.45	0.71	0.47	0.91	—	—	3.0	3.4	2.9	3.4	2.8	3.8	—	—	—	—	—	—
F 41 4_739.4	739.4	0.44	0.70	0.46	0.90	—	—	3.0	3.4	2.9	3.4	2.8	3.8	—	—	—	—	—	—
F 41 4_813.8	813.8	0.44	0.70	0.46	0.90	—	—	3.0	3.4	2.9	3.4	2.8	3.8	—	—	—	—	—	—
F 41 4_900.5	900.5	0.44	0.70	0.46	0.90	—	—	3.0	3.4	2.9	3.4	2.8	3.8	—	—	—	—	—	—
F 41 4_982.4	982.4	0.44	0.70	0.46	0.90	—	—	3.0	3.4	2.9	3.4	2.8	3.8	—	—	—	—	—	—
F 41 4_1092	1092	0.43	0.69	0.45	0.89	—	—	3.0	3.4	2.9	3.4	2.8	3.8	—	—	—	—	—	—
F 41 4_1213	1213	0.43	0.69	0.45	0.89	—	—	3.0	3.4	2.9	3.4	2.8	3.8	—	—	—	—	—	—
F 41 4_1411	1411	0.43	0.69	0.45	0.89	—	—	3.0	3.4	2.9	3.4	2.8	3.8	—	—	—	—	—	—

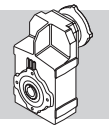

F 51

	i	J (•10-4) [kgm2]										
			IEC									
			63	71	80	90	100	112	132	160	180	
F 51 2_7.2	7.2	25	—	—	28	28	30	30	42	101	103	34
F 51 2_9.1	9.1	17	—	—	20	19	22	22	33	92	94	26
F 51 2_11.1	11.1	16	—	—	19	19	22	22	33	92	94	25
F 51 2_14.0	14.0	11	—	—	14	14	17	17	28	87	89	20
F 51 2_18.8	18.8	7.0	—	—	9.8	9.6	12	12	24	83	85	16
F 51 2_23.8	23.8	4.5	—	—	7.3	7.2	9.9	9.9	21	80	82	13
F 51 2_30.0	30.0	3.1	3.8	3.8	5.9	5.8	8.5	8.5	20	79	81	12
F 51 2_37.1	37.1	2.2	3.0	3.0	5.0	4.9	7.6	7.6	19	78	80	11
F 51 3_48.9	48.9	6.2	—	—	8.9	8.8	12	12	23	82	84	15
F 51 3_65.8	65.8	4.2	—	—	6.9	6.8	9.6	9.6	21	80	82	13
F 51 3_83.2	83.2	2.7	—	—	5.5	5.4	8.1	8.1	19	78	80	12
F 51 3_105.1	105.1	2.0	2.7	2.7	4.8	4.6	7.4	7.4	19	78	80	11
F 51 3_129.9	129.9	1.5	2.2	2.2	4.3	4.1	6.9	6.9	18	77	79	10
F 51 3_165.6	165.6	0.95	1.7	1.7	3.7	3.6	6.3	6.3	17	76	78	9.7
F 51 3_202.4	202.4	0.72	1.4	1.4	3.5	3.3	6.1	6.1	17	76	78	9.5
F 51 3_216.9	216.9	0.64	1.4	1.3	3.4	3.3	6.0	6.0	—	—	—	9.4
F 51 3_239.8	239.8	0.60	1.3	1.3	3.4	3.2	6.0	6.0	—	—	—	9.4
F 51 3_262.1	262.1	0.53	1.3	1.3	3.3	3.2	5.9	5.9	—	—	—	9.3
F 51 3_285.9	285.9	0.46	1.2	1.2	3.2	3.1	5.8	5.8	—	—	—	9.2
F 51 3_317.3	317.3	0.39	1.1	1.1	3.2	3.0	5.8	5.8	—	—	—	9.2
F 51 3_352.5	352.5	0.28	1.1	1.1	3.1	3.0	5.7	5.7	—	—	—	9.1
F 51 4_429.1	429.1	0.36	1.1	1.1	3.1	3.0	5.7	5.7	18	—	—	2.4
F 51 4_530.5	530.5	0.33	1.1	1.0	3.1	3.0	5.7	5.7	18	—	—	2.4
F 51 4_676.3	676.3	0.30	1.0	1.0	3.1	2.9	5.7	5.7	18	—	—	2.4
F 51 4_826.4	826.4	0.28	1.0	1.0	3.0	2.9	5.7	5.7	18	—	—	2.3
F 51 4_885.5	885.5	0.28	1.0	1.0	3.0	2.9	5.7	5.7	—	—	—	2.3
F 51 4_979.4	979.4	0.28	1.0	1.0	3.0	2.9	5.7	5.7	—	—	—	2.3
F 51 4_1070	1070	0.27	1.0	1.0	3.0	2.9	5.6	5.6	—	—	—	2.3
F 51 4_1168	1168	0.27	1.0	1.0	3.0	2.9	5.6	5.6	—	—	—	2.3
F 51 4_1296	1296	0.26	1.0	1.0	3.0	2.9	5.6	5.6	—	—	—	2.3
F 51 4_1439	1439	0.26	1.0	1.0	3.0	2.9	5.6	5.6	—	—	—	2.3

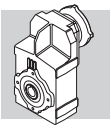

F 51

	i	J (•10-4) [kgm2]											
		SERVO											
		80B		95A		80C 95B 110A		95C 110B 130A		130B 180A		180B	
		SK	SC	SK	SC	SK	SC	SK	SC	SK	SC	SK	SC
F 51 2_7.2	7.2	—	—	—	—	28	29	28	23	42	44	42	47
F 51 2_9.1	9.1	—	—	—	—	20	21	19	20	34	36	33	38
F 51 2_11.1	11.1	—	—	—	—	19	20	19	20	33	35	33	38
F 51 2_14.0	14.0	—	—	—	—	14	15	14	15	28	30	28	33
F 51 2_18.8	18.8	—	—	—	—	9.8	10	9.6	11	24	26	24	29
F 51 2_23.8	23.8	—	—	—	—	7.3	7.8	7.2	8.2	21	24	21	26
F 51 2_30.0	30.0	5.9	6.4	5.9	6.4	5.9	6.4	5.8	6.8	20	23	20	25
F 51 2_37.1	37.1	5.0	5.5	5.0	5.5	5.0	5.5	4.9	5.9	19	22	19	24
F 51 3_48.9	48.9	—	—	—	—	8.9	9.4	8.8	9.8	23	26	23	28
F 51 3_65.8	65.8	—	—	—	—	6.9	7.4	6.8	7.8	21	24	21	26
F 51 3_83.2	83.2	—	—	—	—	5.5	6.0	5.4	6.4	20	22	19	24
F 51 3_105.1	105.1	4.8	5.3	4.8	5.3	4.8	5.3	4.6	5.6	19	21	19	24
F 51 3_129.9	129.9	4.3	4.8	4.3	4.8	4.3	4.8	4.1	5.1	18	21	18	23
F 51 3_165.6	165.6	3.8	4.2	3.8	4.2	3.7	4.2	3.6	4.6	18	20	17	22
F 51 3_202.4	202.4	3.5	4.0	3.5	4.0	3.5	4.0	3.3	4.3	18	20	17	22
F 51 3_216.9	216.9	3.5	3.9	3.5	3.9	3.4	3.9	3.3	4.3	—	—	—	—
F 51 3_239.8	239.8	3.4	3.9	3.4	3.9	3.4	3.9	3.2	4.2	—	—	—	—
F 51 3_262.1	262.1	3.4	3.8	3.4	3.8	3.3	3.8	3.2	4.2	—	—	—	—
F 51 3_285.9	285.9	3.3	3.7	3.3	3.7	3.2	3.7	3.1	4.1	—	—	—	—
F 51 3_317.3	317.3	3.2	3.6	3.2	3.6	3.2	3.7	3.0	4.0	—	—	—	—
F 51 3_352.5	352.5	3.1	3.5	3.1	3.5	3.1	3.6	3.0	4.0	—	—	—	—
F 51 4_429.1	429.1	—	—	3.2	3.6	3.1	3.6	3.0	4.0	—	—	—	—
F 51 4_530.5	530.5	—	—	3.2	3.6	3.1	3.6	3.0	4.0	—	—	—	—
F 51 4_676.3	676.3	—	—	3.1	3.6	3.1	3.6	2.9	3.9	—	—	—	—
F 51 4_826.4	826.4	—	—	3.1	3.5	3.0	3.5	2.9	3.9	—	—	—	—
F 51 4_885.5	885.5	—	—	3.1	3.5	3.0	3.5	2.9	3.9	—	—	—	—
F 51 4_979.4	979.4	—	—	3.1	3.5	3.0	3.5	2.9	3.9	—	—	—	—
F 51 4_1070	1070	—	—	3.1	3.5	3.0	3.5	2.9	3.9	—	—	—	—
F 51 4_1168	1168	—	—	3.1	3.5	3.0	3.5	2.9	3.9	—	—	—	—
F 51 4_1296	1296	—	—	3.1	3.5	3.0	3.5	2.9	3.9	—	—	—	—
F 51 4_1439	1439	—	—	3.1	3.5	3.0	3.5	2.9	3.9	—	—	—	—

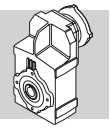

F 60

	i	J (•10-4) [kgm2]										
			IEC									
			63	71	80	90	100	112	132	160	180	
F 60 3_9.0	9.0	40	—	—	—	—	—	—	59	118	116	61
F 60 3_9.7	9.7	38	—	—	—	—	—	—	57	116	114	59
F 60 3_11.8	11.8	25	—	—	28	28	29	29	44	103	101	46
F 60 3_12.7	12.7	24	—	—	27	27	28	28	43	102	100	45
F 60 3_14.5	14.5	18	—	—	21	20	22	22	37	96	94	39
F 60 3_15.7	15.7	17	—	—	20	20	21	21	36	95	93	38
F 60 3_19.1	19.1	10	—	—	13	13	14	14	29	89	86	31
F 60 3_20.7	20.7	9.9	—	—	13	13	14	14	29	88	86	31
F 60 3_23.5	23.5	7.3	—	—	10	10	11	11	26	86	83	28
F 60 3_25.4	25.4	7.1	—	—	9.9	9.9	11	11	26	85	83	28
F 60 3_29.6	29.6	15	—	—	—	—	—	—	34	93	91	36
F 60 3_32.1	32.1	15	—	—	—	—	—	—	34	93	91	36
F 60 3_38.8	38.8	11	—	—	14	13	15	15	30	89	87	32
F 60 3_42.1	42.1	11	—	—	13	13	15	15	29	89	87	31
F 60 3_47.8	47.8	8.2	—	—	11	11	12	12	27	86	84	29
F 60 3_51.8	51.8	8.1	—	—	11	11	12	12	27	86	84	29
F 60 3_63.0	63.0	4.9	—	—	7.7	7.6	8.9	8.9	24	83	81	26
F 60 3_68.3	68.3	4.8	—	—	7.7	7.6	8.9	8.9	24	83	81	26
F 60 3_77.6	77.6	3.7	—	—	6.6	6.5	7.8	7.8	23	82	80	25
F 60 3_84.0	84.0	3.7	—	—	6.5	6.5	7.8	7.8	23	82	80	25
F 60 3_98.2	98.2	2.7	4.2	4.2	5.6	5.5	6.8	6.8	22	81	79	24
F 60 3_106.4	106.4	2.7	4.2	4.2	5.5	5.4	6.8	6.8	22	81	79	24
F 60 3_120.5	120.5	1.8	3.2	3.2	4.6	4.6	5.9	5.9	21	80	78	23
F 60 3_130.5	130.5	1.8	3.2	3.2	4.6	4.6	5.8	5.8	21	80	78	23
F 60 3_150.4	150.4	1.3	2.7	2.7	4.1	4.1	5.4	5.4	20	80	77	22
F 60 3_162.9	162.9	1.3	2.7	2.7	4.1	4.1	5.4	5.4	20	80	77	22
F 60 3_185.9	185.9	0.90	2.4	2.4	3.8	3.7	5.0	5.0	20	79	77	22
F 60 3_201.4	201.4	0.90	2.4	2.4	3.8	3.7	5.0	5.0	20	79	77	22
F 60 3_217.6	217.6	0.70	2.2	2.2	3.6	3.5	4.8	4.8	—	—	—	22
F 60 3_235.8	235.8	0.70	2.2	2.2	3.6	3.5	4.8	4.8	—	—	—	22
F 60 3_259.1	259.1	0.50	2.0	2.0	3.4	3.3	4.6	4.6	—	—	—	22
F 60 3_280.7	280.7	0.50	2.0	2.0	3.4	3.3	4.6	4.6	—	—	—	22

Im Hinblick auf die Trägheitsmomente der 4-stufigen Getriebe verweisen wir auf unseren Technischen Dienst.

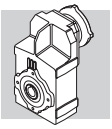

F 60

	i	J (•10-4) [kgm2]									
		SERVO									
		95A		80C 95B 110A		95C 110B 130A		130B 180A		180B	
		SK	SC	SK	SC	SK	SC	SK	SC	SK	SC
F 60 3_9.0	9.0	—	—	—	—	—	—	57	59	59	64
F 60 3_9.7	9.7	—	—	—	—	—	—	55	57	57	62
F 60 3_11.8	11.8	—	—	28	29	28	29	42	44	44	49
F 60 3_12.7	12.7	—	—	27	28	27	28	41	43	43	48
F 60 3_14.5	14.5	—	—	21	22	20	21	35	37	37	42
F 60 3_15.7	15.7	—	—	20	21	20	21	34	36	36	41
F 60 3_19.1	19.1	—	—	13	14	13	14	27	29	29	34
F 60 3_20.7	20.7	—	—	13	14	13	14	27	29	29	34
F 60 3_23.5	23.5	—	—	10	11	10	11	24	27	26	31
F 60 3_25.4	25.4	—	—	9.9	10	9.9	11	24	27	26	31
F 60 3_29.6	29.6	—	—	—	—	—	—	32	34	34	39
F 60 3_32.1	32.1	—	—	—	—	—	—	32	34	34	39
F 60 3_38.8	38.8	—	—	14	15	13	14	28	30	30	35
F 60 3_42.1	42.1	—	—	13	14	13	14	28	30	29	34
F 60 3_47.8	47.8	—	—	11	12	11	12	25	28	27	32
F 60 3_51.8	51.8	—	—	11	12	11	12	25	28	27	32
F 60 3_63.0	63.0	—	—	7.7	8.2	7.6	8.6	22	24	24	29
F 60 3_68.3	68.3	—	—	7.7	8.2	7.6	8.6	22	24	24	29
F 60 3_77.6	77.6	—	—	6.6	7.1	6.5	7.5	21	23	23	28
F 60 3_84.0	84.0	—	—	6.5	7.0	6.5	7.5	21	23	23	28
F 60 3_98.2	98.2	—	—	5.6	6.1	5.5	6.5	20	22	22	27
F 60 3_106.4	106.4	5.5	6.0	5.5	6.0	5.4	6.4	20	22	22	27
F 60 3_120.5	120.5	2.2	2.7	4.6	5.1	4.6	5.6	19	21	21	26
F 60 3_130.5	130.5	2.2	2.7	4.6	5.1	4.6	5.6	19	21	21	26
F 60 3_150.4	150.4	4.1	4.6	4.1	4.6	4.1	5.1	18	21	20	25
F 60 3_162.9	162.9	4.1	4.6	4.1	4.6	4.1	5.1	18	21	20	25
F 60 3_185.9	185.9	3.7	4.2	3.8	4.3	3.7	4.7	18	20	20	25
F 60 3_201.4	201.4	3.7	4.2	3.8	4.3	3.7	4.7	18	20	20	25
F 60 3_217.6	217.6	3.5	4.0	3.6	4.1	3.5	4.5	—	—	—	—
F 60 3_235.8	235.8	3.5	4.0	3.6	4.1	3.5	4.5	—	—	—	—
F 60 3_259.1	259.1	3.3	3.8	3.4	3.9	3.3	4.3	—	—	—	—
F 60 3_280.7	280.7	3.3	3.8	3.4	3.9	3.3	4.3	—	—	—	—

Im Hinblick auf die Trägheitsmomente der 4-stufigen Getriebe verweisen wir auf unseren Technischen Dienst.

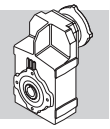

F 70

	i	J (•10-4) [kgm2]									
			IEC								
			80	90	100	112	132	160	180	200	
F 70 3_10.0	10.0	—	—	—	—	—	—	169	167	176	133
F 70 3_10.9	10.9	—	—	—	—	—	—	166	163	173	129
F 70 3_12.8	12.8	—	—	—	—	—	—	139	137	146	102
F 70 3_13.9	13.9	—	—	—	—	—	—	137	135	144	100
F 70 3_16.3	16.3	39	—	—	—	—	58	117	115	124	80
F 70 3_17.7	17.7	37	—	—	—	—	56	116	113	123	79
F 70 3_20.9	20.9	26	—	—	—	—	45	105	102	—	68
F 70 3_22.6	22.6	26	—	—	—	—	44	104	102	—	67
F 70 3_24.6	24.6	21	—	—	—	—	40	99	97	—	62
F 70 3_27.7	27.7	—	—	—	—	—	—	128	126	135	73
F 70 3_30.0	30.0	—	—	—	—	—	—	127	125	134	73
F 70 3_35.4	35.4	—	—	—	—	—	—	114	112	121	77
F 70 3_38.4	38.4	—	—	—	—	—	—	114	111	121	77
F 70 3_45.2	45.2	23	—	—	—	—	42	101	99	108	65
F 70 3_49.0	49.0	23	—	—	—	—	42	101	99	108	65
F 70 3_57.7	57.7	17	—	—	—	—	36	95	93	—	58
F 70 3_62.5	62.5	17	—	—	—	—	36	95	93	—	58
F 70 3_67.9	67.9	14	—	—	—	—	33	92	90	—	55
F 70 3_73.6	73.6	14	—	—	—	—	33	92	90	—	55
F 70 3_85.4	85.4	9.0	11	11	13	13	28	87	85	—	50
F 70 3_92.5	92.5	9.0	11	11	13	13	28	87	85	—	50
F 70 3_101.2	101.2	6.3	8.9	8.8	10	10	25	85	82	—	47
F 70 3_109.6	109.6	6.3	8.9	8.8	10	10	25	85	82	—	47
F 70 3_122.7	122.7	5.1	7.9	7.8	9.1	9.1	24	83	81	—	46
F 70 3_133.0	133.0	5.1	7.9	7.8	9.1	9.1	24	83	81	—	46
F 70 3_153.8	153.8	3.2	6.0	6.0	7.3	7.3	22	81	79	—	44
F 70 3_166.7	166.7	3.2	6.0	6.0	7.3	7.3	22	81	79	—	44
F 70 3_180.9	180.9	2.3	5.1	5.1	6.3	6.3	21	81	78	—	43
F 70 3_196.0	196.0	2.3	5.1	5.0	6.3	6.3	21	81	78	—	43

Im Hinblick auf die Trägheitsmomente der 4-stufigen Getriebe verweisen wir auf unseren Technischen Dienst.

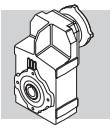

F 80

	i	J (•10-4) [kgm2]										
			IEC									
			80	90	100	112	132	160	180	200	225	
F 80 3_10.3	10.3	—	—	—	—	—	—	—	286	300	578	252
F 80 3_11.2	11.2	—	—	—	—	—	—	—	277	291	569	244
F 80 3_12.9	12.9	—	—	—	—	—	—	217	218	231	509	184
F 80 3_14.0	14.0	—	—	—	—	—	—	212	212	226	504	178
F 80 3_16.2	16.2	—	—	—	—	—	—	173	171	180	464	136
F 80 3_17.6	17.6	—	—	—	—	—	—	170	167	177	461	133
F 80 3_20.3	20.3	60	—	—	—	—	79	139	136	146	431	102
F 80 3_22.0	22.0	58	—	—	—	—	77	136	134	143	429	100
F 80 3_25.2	25.2	43	—	—	—	—	62	121	119	150	413	84
F 80 3_28.8	28.8	—	—	—	—	—	—	—	189	203	480	155
F 80 3_31.3	31.3	—	—	—	—	—	—	—	188	201	479	154
F 80 3_36.0	36.0	—	—	—	—	—	—	155	155	169	447	121
F 80 3_39.0	39.0	—	—	—	—	—	—	154	154	168	446	121
F 80 3_45.3	45.3	—	—	—	—	—	—	133	132	141	425	97
F 80 3_49.1	49.1	—	—	—	—	—	—	133	131	140	425	97
F 80 3_56.7	56.7	35	—	—	—	—	54	113	111	120	406	77
F 80 3_61.5	61.5	35	—	—	—	—	54	113	111	120	406	76
F 80 3_70.4	70.4	27	—	—	—	—	46	105	103	133	397	68
F 80 3_76.3	76.3	27	—	—	—	—	45	105	103	133	396	68
F 80 3_85.2	85.2	20	—	—	—	—	39	99	96	126	389	62
F 80 3_92.3	92.3	20	—	—	—	—	39	99	96	126	389	61
F 80 3_105.0	105.0	14	16	16	17	17	32	92	90	119	383	55
F 80 3_113.8	113.8	14	16	16	17	17	32	92	90	119	382	55
F 80 3_122.5	122.5	13	15	15	17	17	32	91	89	118	381	54
F 80 3_132.7	132.7	13	15	15	16	16	31	91	89	118	381	54
F 80 3_147.9	147.9	8.5	11	11	13	13	27	87	85	114	377	50
F 80 3_160.2	160.2	8.5	11	11	13	13	27	87	84	—	—	50
F 80 3_184.6	184.6	5.1	7.9	7.8	9.1	9.1	24	83	81	—	—	46
F 80 3_200.0	200.0	5.0	7.9	7.8	9.1	9.1	24	83	81	—	—	46

Im Hinblick auf die Trägheitsmomente der 4-stufigen Getriebe verweisen wir auf unseren Technischen Dienst.

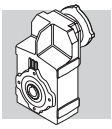

F 90

	i	J (•10-4) [kgm2]											
			IEC										
			80	90	100	112	132	160	180	200	225	250	
F 90 3_10.3	10.3	—	—	—	—	—	—	—	549	559	843	870	850
F 90 3_11.1	11.1	—	—	—	—	—	—	—	529	539	823	850	830
F 90 3_13.4	13.4	—	—	—	—	—	—	—	373	383	667	694	674
F 90 3_14.5	14.5	—	—	—	—	—	—	—	361	371	655	682	662
F 90 3_16.5	16.5	—	—	—	—	—	—	—	286	296	580	607	587
F 90 3_17.9	17.9	—	—	—	—	—	—	—	278	288	572	599	579
F 90 3_20.6	20.6	—	—	—	—	—	—	224	222	232	516	542	513
F 90 3_22.3	22.3	—	—	—	—	—	—	220	217	227	511	537	508
F 90 3_25.4	25.4	103	—	—	—	—	122	181	179	188	474	500	471
F 90 3_28.6	28.6	—	—	—	—	—	—	—	291	301	585	613	593
F 90 3_31.0	31.0	—	—	—	—	—	—	—	289	299	583	610	590
F 90 3_37.4	37.4	—	—	—	—	—	—	—	222	232	516	543	523
F 90 3_40.5	40.5	—	—	—	—	—	—	—	220	230	514	541	521
F 90 3_46.1	46.1	—	—	—	—	—	—	—	186	196	480	507	487
F 90 3_49.9	49.9	—	—	—	—	—	—	—	185	195	479	506	486
F 90 3_57.3	57.3	—	—	—	—	—	—	161	158	168	452	479	450
F 90 3_62.1	62.1	—	—	—	—	—	—	160	158	167	451	478	449
F 90 3_70.8	70.8	61	—	—	—	—	80	139	137	146	432	458	429
F 90 3_76.7	76.7	60	—	—	—	—	79	139	136	146	431	458	429
F 90 3_88.4	88.4	44	—	—	—	—	63	123	120	151	414	441	412
F 90 3_95.8	95.8	44	—	—	—	—	63	122	120	151	414	441	412
F 90 3_103.3	103.3	41	—	—	—	—	59	119	117	146	410	436	408
F 90 3_111.9	111.9	40	—	—	—	—	59	119	116	146	409	436	407
F 90 3_126.8	126.8	26	29	29	30	30	45	105	102	132	395	422	393
F 90 3_137.3	137.3	26	29	29	30	30	45	104	102	132	395	422	393
F 90 3_150.3	150.3	21	24	24	25	25	40	100	97	127	390	417	388
F 90 3_162.8	162.8	21	24	24	25	25	40	100	97	127	390	417	388
F 90 3_179.2	179.2	14	16	16	18	18	33	92	90	—	—	—	381
F 90 3_194.2	194.2	14	16	16	17	17	33	92	90	—	—	—	381

Im Hinblick auf die Trägheitsmomente der 4-stufigen Getriebe verweisen wir auf unseren Technischen Dienst.

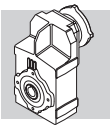

66 EXAKTE ÜBERSETZUNG

i_N	F 10	F 20	F 25	F 31	F 41	F 51	F 60	F 70	F 80	F 90
6.3		6.41210								
7.1	7.40443		6.86957	6.94907	6.72727	7.19408				
8.0		7.83478	8.39375	8.22917						
9.0	8.58204	8.73227	9.35526	9.01630	9.13580	9.05114	8.96000			
10.0	9.76974	10.03069	10.62451	10.74747			9.70667	10.01538	10.33846	10.26577
11.2	11.53759	11.23370			10.77273	11.11005	11.75320	10.85000	11.20000	11.12125
12.5	13.02632		12.98182	12.72727		13.97796	12.73263	12.81731	12.90240	13.41346
14.0	14.64777	14.79842	14.46890	13.94466	14.62963		14.47385	13.88542	13.97760	14.53125
16.0	16.97738		16.62032	16.80000	17.11667		15.68000	16.34455	16.24615	16.52538
18.0		18.08182	18.61364	18.48804	18.89130	18.82155	19.06872	17.70660	17.60000	17.90250
20.0	19.32692	20.15311	21.81818	21.11230			20.65778	20.86538	20.33231	20.56731
22.4	22.82418	23.14973	23.75758	23.38636		23.79447	23.46381	22.60417	22.02667	22.28125
25.0	25.76923	25.92614	27.20455	27.27273	24.11579		25.41913	24.55695	25.22585	25.38622
28.0	29.63462	30.38961	30.03636	30.12121	30.11875	30.03828	29.61538	27.69231	28.84615	28.61169
31.5	32.98462	33.09091	32.18182	34.36364			32.08333	30.00000	31.25000	30.99600
35.5	35.34066	37.89205	36.41958	37.67273	38.18333	37.13636	38.84771	35.43956	36.00000	37.38462
40.0	39.64497	41.83636	40.72727	40.36364			42.08502	38.39286	39.00000	40.50000
45.0	44.66667	44.82468	45.56607	44.64336	47.92667		47.84024	45.19231	45.32967	46.05785
50.0	48.72727	50.72727	50.78571	47.54630	51.49270	48.89965	51.82692	48.95833	49.10714	49.89600
56.0	56.69231	56.72727	58.33718	52.09420	60.24646		63.02761	57.69231	56.73077	57.32308
63.0	62.99145	61.88430	65.33371	62.76111	66.49275	65.84416	68.27991	62.50000	61.45833	62.10000
71.0	71.12308	69.13636	76.58163	69.06725			77.55467	73.55769	70.38462	70.75385
80.0	81.31624	76.81818	83.38889	78.87092	84.88166	83.24111	84.01756	85.38462	76.25000	76.65000
90.0	91.48077	90.40909	95.48772	87.36632			98.19838	92.50000	92.30769	88.39385
100.0	106.02198	101.63636	105.42738	101.88492	106.01061	105.08407	106.38158	101.18343	105.00000	103.33491
112.2		114.34091	112.95791	112.52623			120.45488	109.61538	113.75000	111.94615
125.5	127.12821	132.19481	127.83242	128.37500	134.39596	129.91558	130.49279	122.72727	122.48521	126.77538
140.0		156.30469	142.95238	140.73704			150.35503	132.95455	132.69231	150.30533
160.0		172.57500	155.94805	166.77778	168.69010	165.62338	162.88462	166.66667	160.22727	162.83077
180.0		184.90179	174.22321	185.43056	180.73939	202.39481	185.89349	180.94406	184.61538	179.21958
200.0		209.25000	193.58135	202.28788	198.92028	216.85158	201.38462	196.02273	200.00000	194.15455
225.0		234.00000	227.83036	228.22222	220.13131	239.84416	217.64679	216.52422	218.49174	213.59178
250.0		255.27273	256.12302	253.58025	240.14325	262.11039	259.08284	234.56790	273.89277	231.39109
280.0		285.18750	288.13839	293.83611	266.93818	285.93861	280.67308	280.93645	296.71717	268.72770
315.0		316.87500	333.13010	332.82407	296.59798	317.26753	315.38899	304.34783	353.67893	291.12168
355.0		372.93750		374.42708	344.79515	352.51948	341.67140	372.46964	383.15217	361.84615
400.0		419.25000	393.88686	418.86023		429.09330	399.34008	403.50877	451.49061	392.00000
450.0		471.65625	434.88795	462.60785	433.67975		432.61842	471.15385	489.11483	457.45099
500.0			465.95137	527.76389			489.84985	510.41667	563.87675	495.57191
560.0		545.30357	527.30872	578.58560	549.80165	530.48864	530.67067	606.83761	610.86648	577.48888
630.0			589.67857	619.91314	690.09587	676.29545	611.44379	657.40741	714.86014	625.61296
710.0			643.28571	685.64198	739.38843	826.44545	755.96686	758.97436	774.43182	713.95030
800.0			718.67076	762.32562	813.76478	885.47727	818.96410	822.22222	897.27273	773.44615
900.0			798.52307	831.62795	900.53719	979.36364	885.09695	899.40828	972.04545	910.18225
1000.0			939.80022	938.24691	982.40421	1070.28409	958.85503	974.35897	1058.06885	986.03077
1125.0			1056.50744	1042.49657	1092.01983	1167.58264	1053.60355	1090.90909	1146.24126	1112.25941
1250.0			1188.57087	1207.99290	1213.35537	1295.50909	1141.40385	1181.81818	1277.33630	1204.94769
1400.0			1374.16167	1368.27675	1410.52562	1439.45455		1367.52137	1383.78099	1427.90059
1600.0				1539.31134				1584.61538	1577.62238	1571.37386
1800.0								1716.66667	1709.09091	1702.32168
2000.0								2019.23077	1833.98601	1937.26864
2250.0								2187.50000	1986.81818	2098.70769

2x 3x 4x

F 10...M/ME

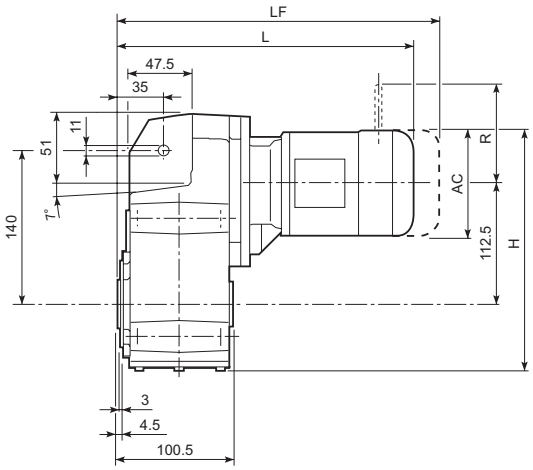

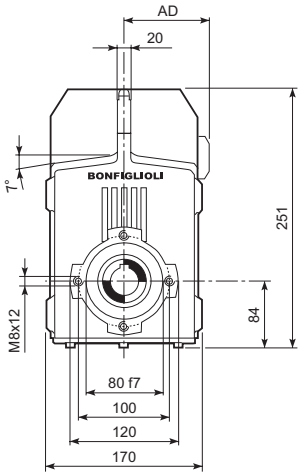

								M...FD M...FA		M...FD		M...FA	
			AC	H	L	AD	Kg	LF	Kg	R	AD	R	AD
F 10 2	**S05**	**M05**	121	220.5	311.5	95	12	377.5	13	96	122	116	95
F 10 2	**S1**	**M1**	138	265.5	340.5	108	14	401.5	17	103	135	124	108
F 10 2	**S2**	**ME2S**	156	274.5	369.5	119	18	—	—	—	—	—	—
F 10 2	**S3**	**ME3S**	195	294	412.5	142	22	—	—	—	—	—	—
F 10 2	**S3**	**ME3L**	195	294	444.5	142	24	—	—	—	—	—	—

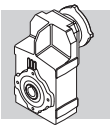

F 10...P(IEC)

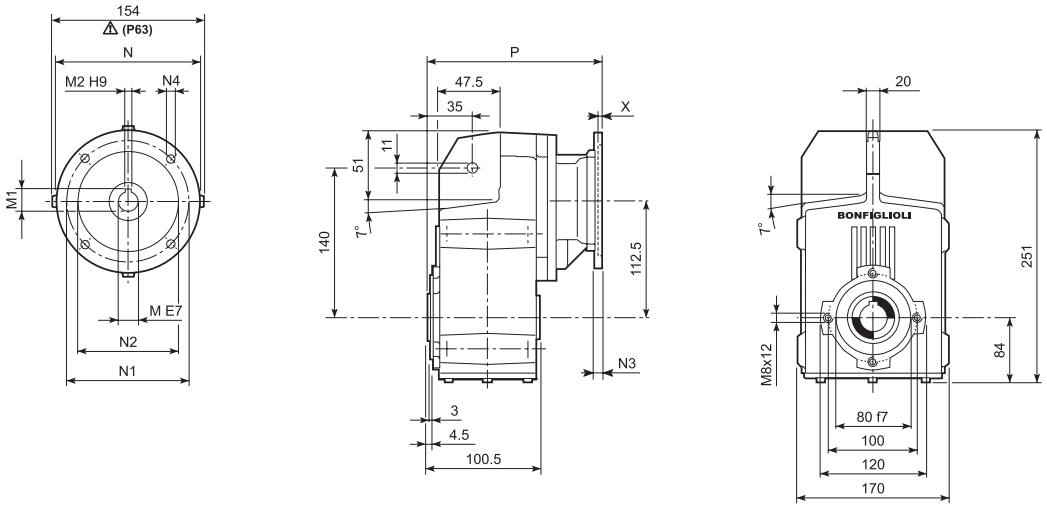

		M	M1	M2	N	N1	N2	N3	N4	X	P	Kg
F 10 2	**P63**	11	12.8	4	140	115	95	—	M8x19	4	185.5	8
F 10 2	**P71**	14	16.3	5	160	130	110	—	M8x16	4.5	185.5	8
F 10 2	**P80**	19	21.8	6	200	165	130	—	M10x12	4	205	9
F 10 2	**P90**	24	27.3	8	200	165	130	—	M10x12	4	205	9
F 10 2	**P100**	28	31.3	8	250	215	180	—	M12x16	4.5	215	13
F 10 2	**P112**	28	31.3	8	250	215	180	—	M12x16	4.5	215	13

F 10...HS

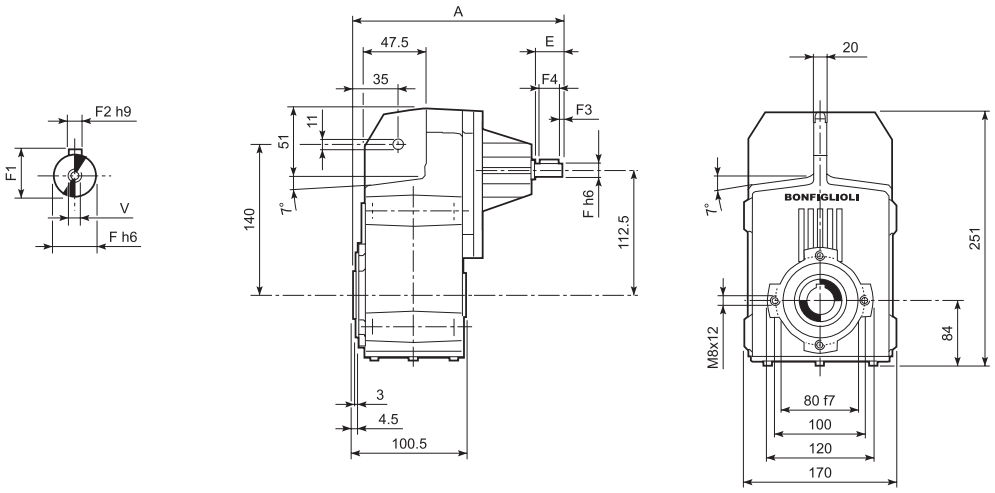

		A	E	F	F1	F2	F3	F4	V	Kg
F 10 2	**HS**	192	40	16	18	5	2.5	35	M6x16	7.5

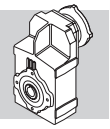

F 10...SK / SC

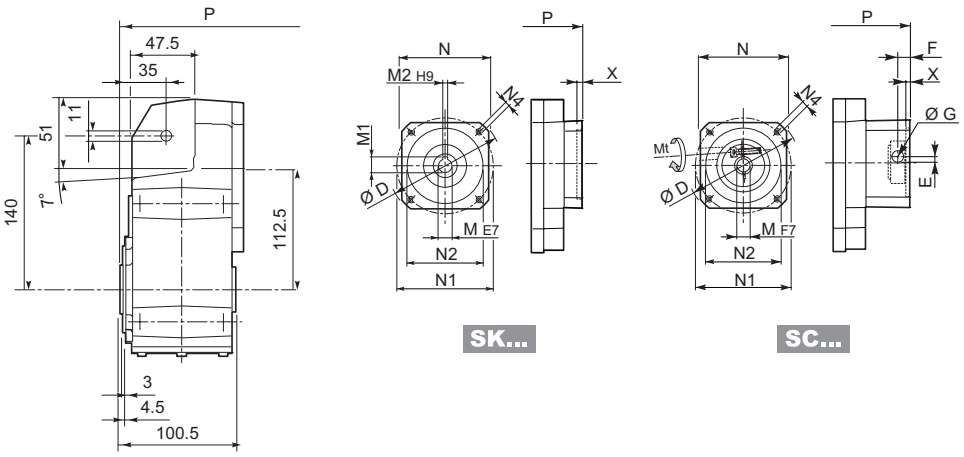

		D	M	M1	M2	N	N1	N2	N4	X	P	Kg
F 10 2	**SK 60A**	102	11	12.8	4	82	75	60	M5x10	3.5	157	8
F 10 2	**SK 60B**	102	14	16.3	5	82	75	60	M5x10	4	164	8
F 10 2	**SK 80A**	115	14	16.3	5	90	100	80	M6x12	4	164	8
F 10 2	**SK 80C**	120	19	21.8	6	96	100	80	M6x12	4	205	9
F 10 2	**SK 95A**	130	14	16.3	5	102	115	95	M8x12	4	205	9
F 10 2	**SK 95B**	130	19	21.8	6	102	115	95	M8x12	4	205	9
F 10 2	**SK 95C**	130	24	27.3	8	102	115	95	M8x12	4	205	9
F 10 2	**SK 110A**	150	19	21.8	6	120	130	110	M8x12	5	205	9
F 10 2	**SK 110B**	150	24	27.3	8	120	130	110	M8x12	5	205	9

			Mt [Nm]	D	E	F	G	M	N	N1	N2	N4	X	P	Kg
F 10 2	**SC 60A**	M6	15	102	7	12.5	12.5	11	82	75	60	M5x10	4	184	8
F 10 2	**SC 60B**	M6	15	102	7	12.5	12.5	14	82	75	60	M5x10	4	184	9
F 10 2	**SC 80A**	M6	15	115	6	12.5	12.5	14	90	100	80	M6x12	4	184	9
F 10 2	**SC 80C**	M6	15	120	15.5	14.5	17.75	19	96	100	80	M6x12	4	228.5	10
F 10 2	**SC 95A**	M6	15	130	16.5	15	17.75	14	102	115	95	M8x16	4	228.5	10
F 10 2	**SC 95B**	M6	15	130	16.5	15	17.75	19	102	115	95	M8x16	4	228.5	10
F 10 2	**SC 95C**	M6	15	130	16.5	15	17.75	24	102	115	95	M8x16	4	228.5	10
F 10 2	**SC 110A**	M6	15	150	16.5	16	17.75	19	120	130	110	M8x16	5	228.5	11
F 10 2	**SC 110B**	M6	15	150	16.5	16	17.75	24	120	130	110	M8x16	5	228.5	11

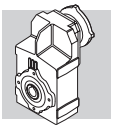

F 10

F 10...H

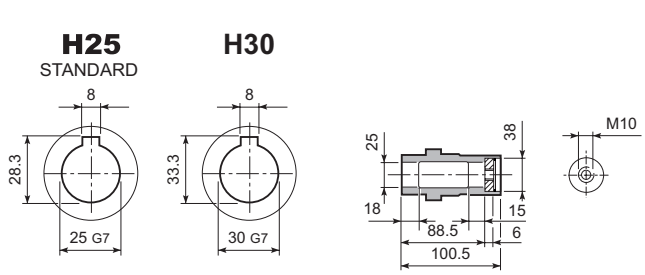

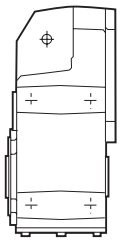

F 10...S

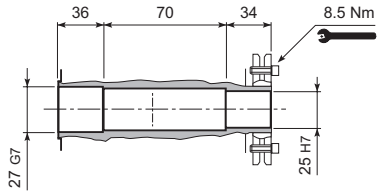

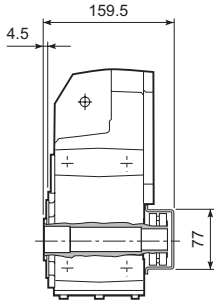

F 10...R

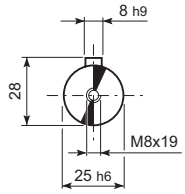

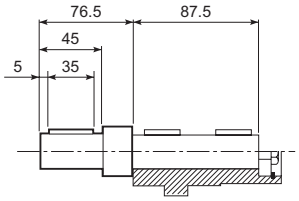

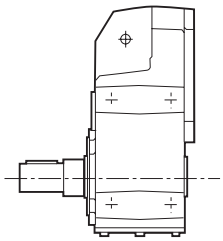

F 10...QF

	Ø
QF25	25
QF30	30

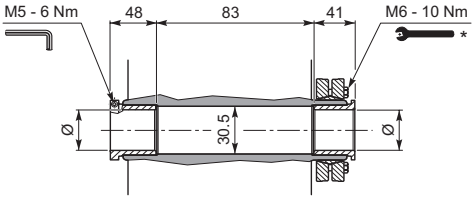

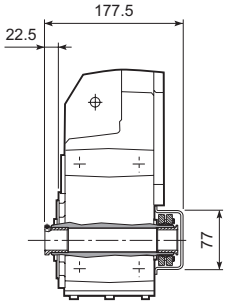

F 10...F...

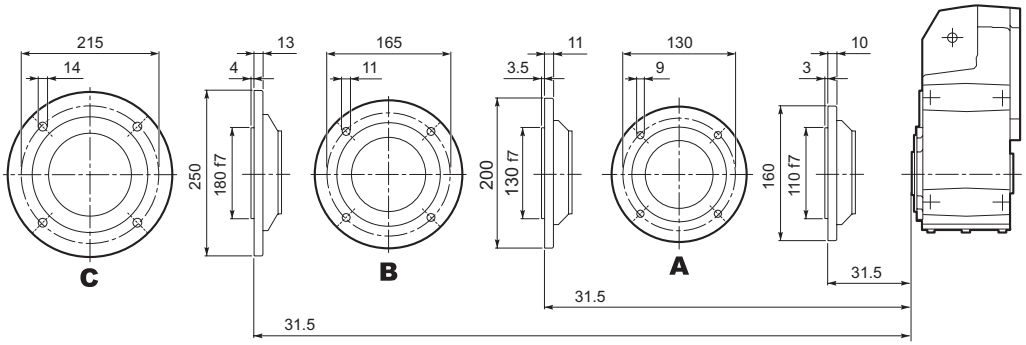

* Befolgen Sie die MONTAGEANLEITUNG die dem Getriebe beiliegt.

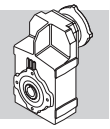

F 20...M/ME

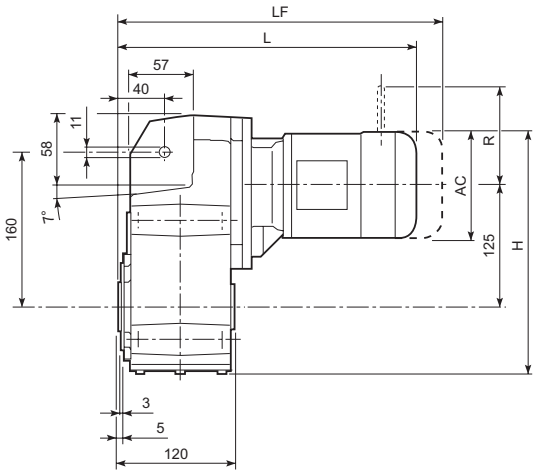

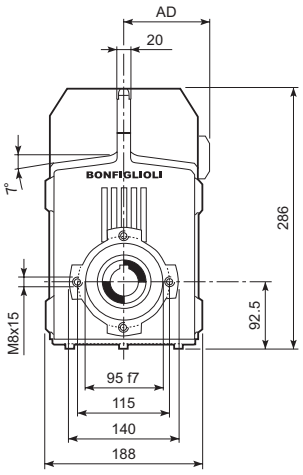

								M...FD M...FA		M...FD		M...FA	
			AC	H	L	AD	Kg	LF	Kg	R	AD	R	AD
F 20 2	**S05**	**M05**	121	278.2	323.5	95	15	389.5	17	96	122	116	95
F 20 2	**S1**	**M1**	138	286.7	352.5	108	17	413.5	20	103	135	124	108
F 20 2	**S2**	**ME2S**	156	295.7	381.5	119	21	—	—	—	—	—	—
F 20 2	**S3**	**ME3S**	195	315.2	424.5	142	26	—	—	—	—	—	—
F 20 2	**S3**	**ME3L**	195	315.2	456.5	142	33	—	—	—	—	—	—
F 20 3	**S05**	**M05**	121	278.2	379	95	17	445	18	96	122	116	95
F 20 3	**S1**	**M1**	138	286.7	408	108	19	469	21	103	135	124	108
F 20 3	**S2**	**ME2S**	156	295.7	437	119	22	—	—	—	—	—	—
F 20 3	**S3**	**ME3S**	195	315.2	480	142	27	—	—	—	—	—	—
F 20 3	**S3**	**ME3L**	195	315.2	512	142	34	—	—	—	—	—	—

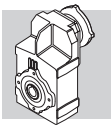

F 20...P(IEC)

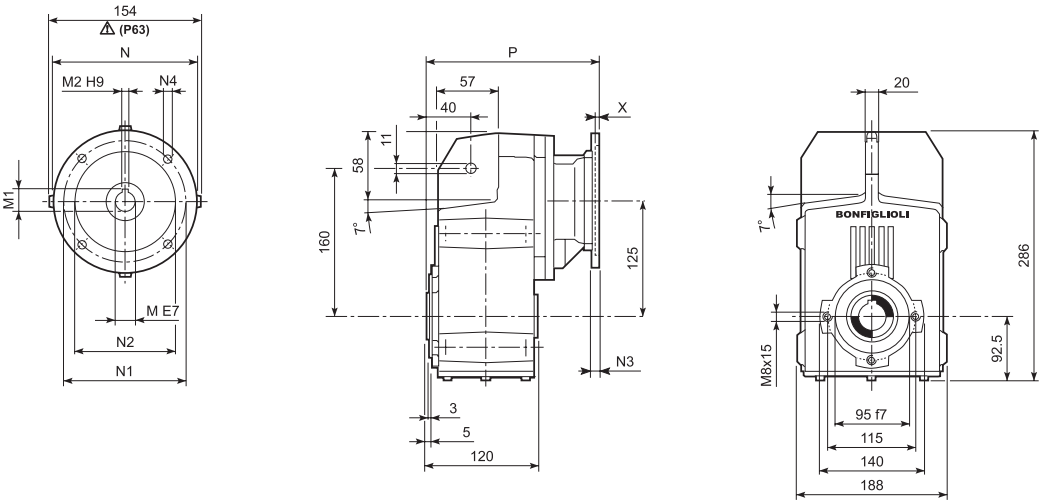

		M	M1	M2	N	N1	N2	N3	N4	X	P	Kg
F 20 2	**P63**	11	12.8	4	140	115	95	—	M8x19	4	197.5	12
F 20 2	**P71**	14	16.3	5	160	130	110	—	M8x16	4.5	197.5	12
F 20 2	**P80**	19	21.8	6	200	165	130	—	M10x12	4	217	13
F 20 2	**P90**	24	27.3	8	200	165	130	—	M10x12	4	217	12
F 20 2	**P100**	28	31.3	8	250	215	180	—	M12x16	4.5	227	16
F 20 2	**P112**	28	31.3	8	250	215	180	—	M12x16	4.5	227	16
F 20 3	**P63**	11	12.8	4	140	115	95	—	M8x19	4	253	13
F 20 3	**P71**	14	16.3	5	160	130	110	—	M8x16	4.5	253	13
F 20 3	**P80**	19	21.8	6	200	165	130	—	M10x12	4	272.5	14
F 20 3	**P90**	24	27.3	8	200	165	130	—	M10x12	4	272.5	14
F 20 3	**P100**	28	31.3	8	250	215	180	—	M12x16	4.5	282.5	18
F 20 3	**P112**	28	31.3	8	250	215	180	—	M12x16	4.5	282.5	18

F 20...HS

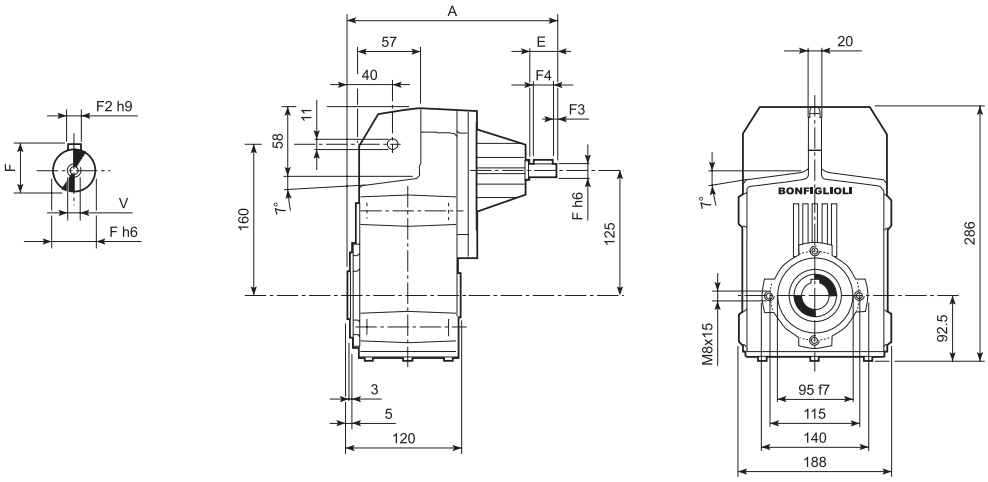

		A	E	F	F1	F2	F3	F4	V	Kg
F 20 2	**HS**	247.5	40	19	21.5	6	2.5	35	M6x16	11.5
F 20 3		260	40	16	18	5	2.5	35	M6x16	12.4

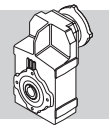

F 20...SK / SC

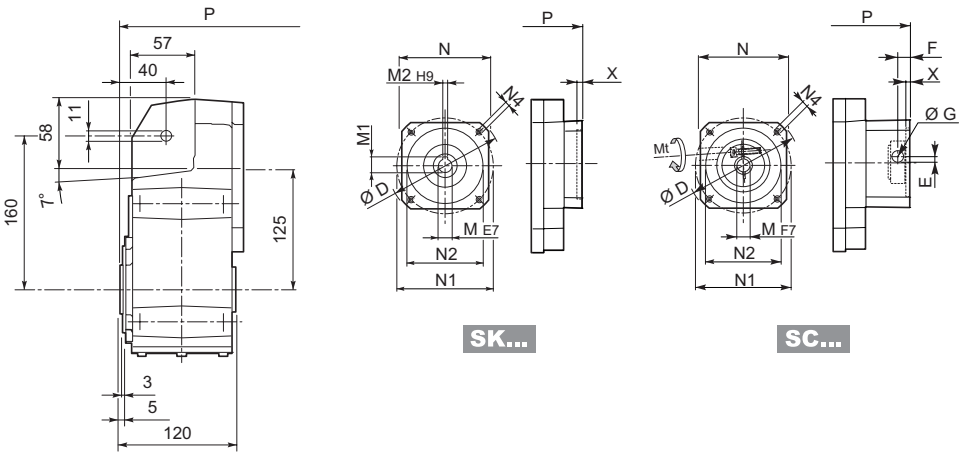

											2x		3x	
		D	M	M1	M2	N	N1	N2	N4	X	P	Kg	P	Kg
F 20 2/3	**SK 60A**	102	11	12.8	4	82	75	60	M5x10	3.5	169	11	224.5	12
F 20 2/3	**SK 60B**	102	14	16.3	5	82	75	60	M5x10	4	176	12	231.5	13
F 20 2/3	**SK 80A**	115	14	16.3	5	90	100	80	M6x12	4	217	12	231.5	13
F 20 2/3	**SK 80C**	120	19	21.8	6	96	100	80	M6x12	4	217	13	272.5	14
F 20 2/3	**SK 95A**	130	14	16.3	5	102	115	95	M8x12	4	217	13	272.5	14
F 20 2/3	**SK 95B**	130	19	21.8	6	102	115	95	M8x12	4	217	13	272.5	14
F 20 2/3	**SK 95C**	130	24	27.3	8	102	115	95	M8x12	4	217	13	272.5	14
F 20 2/3	**SK 110A**	150	19	21.8	6	120	130	110	M8x12	5	217	13	272.5	14
F 20 2/3	**SK 110B**	150	24	27.3	8	120	130	110	M8x12	5	217	13	272.5	14

														2x		3x	
			Mt [Nm]	D	E	F	G	M	N	N1	N2	N4	X	P	Kg	P	Kg
F 20 2/3	**SC 60A**	M6	15	102	7	12.5	12.5	11	82	75	60	M5x10	4	196	12	251.5	13
F 20 2/3	**SC 60B**	M6	15	102	7	12.5	12.5	14	82	75	60	M5x10	4	196	13	251.5	14
F 20 2/3	**SC 80A**	M6	15	115	6	12.5	12.5	14	90	100	80	M6x12	4	196	13	251.5	14
F 20 2/3	**SC 80C**	M6	15	120	15.5	14.5	17.75	19	96	100	80	M6x12	4	240.5	14	296	15
F 20 2/3	**SC 95A**	M6	15	130	16.5	15	17.75	14	102	115	95	M8x16	4	240.5	14	296	15
F 20 2/3	**SC 95B**	M6	15	130	16.5	15	17.75	19	102	115	95	M8x16	4	240.5	14	296	15
F 20 2/3	**SC 95C**	M6	15	130	16.5	15	17.75	24	102	115	95	M8x16	4	240.5	14	296	15
F 20 2/3	**SC 110A**	M6	15	150	16.5	16	17.75	19	120	130	110	M8x16	5	240.5	15	296	16
F 20 2/3	**SC 110B**	M6	15	150	16.5	16	17.75	24	120	130	110	M8x16	5	240.5	15	296	16

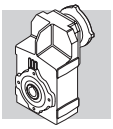

F 20

F 20...H

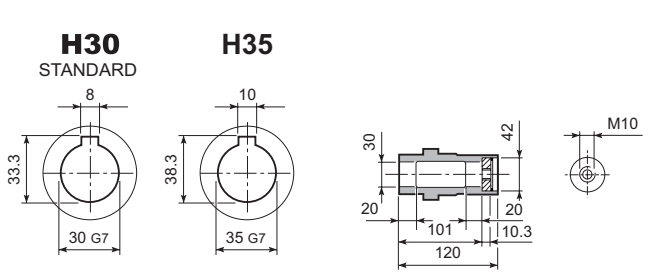

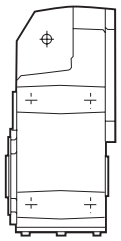

F 20...S

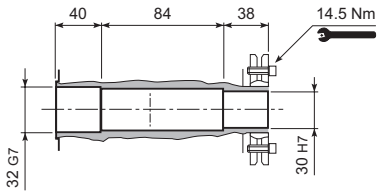

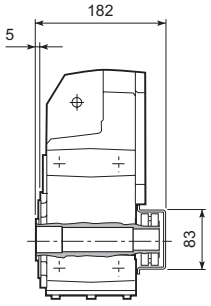

F 20...R

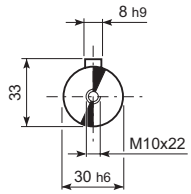

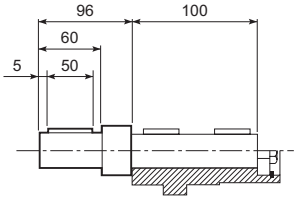

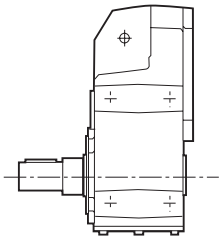

F 20...QF

	Ø
QF25	25
QF30	30

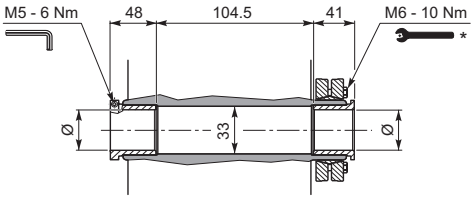

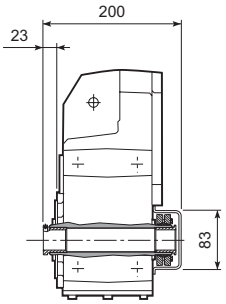

F 20...F...

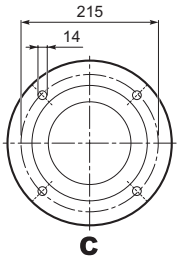

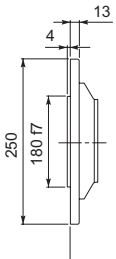

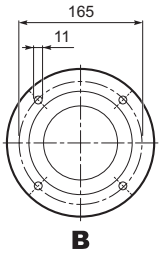

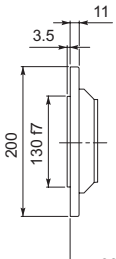

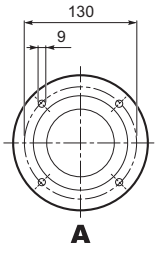

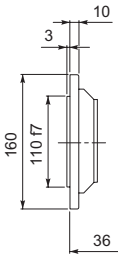

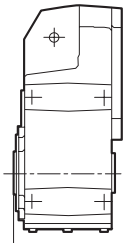

* Befolgen Sie die MONTAGEANLEITUNG die dem Getriebe beiliegt.

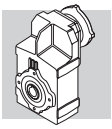

F 25...M/ME

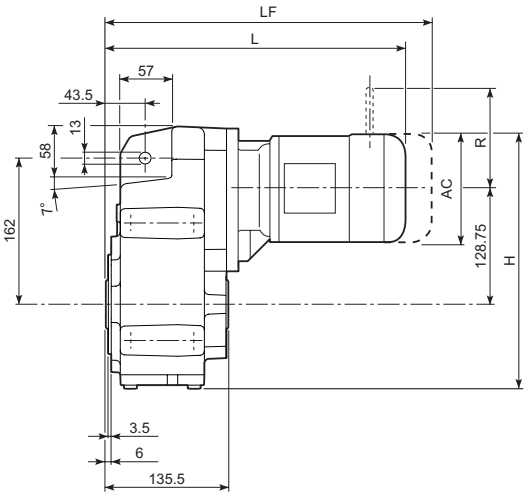

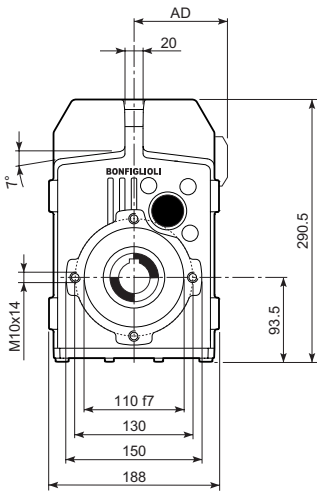

								M...FD M...FA		M...FD		M...FA	
			AC	H	L	AD	Kg	LF	Kg	R	AD	R	AD
F 25 2/3	**S05**	**M05**	121	283	339	95	15	405	17	96	122	116	95
F 25 2/3	**S1**	**M1**	138	291.5	368	108	17	429	20	103	135	124	108
F 25 2/3	**S2**	**ME2S**	156	300.5	397	119	21	—	—	—	—	—	—
F 25 2/3	**S3**	**ME3S**	195	320	440	142	26	—	—	—	—	—	—
F 25 2/3	**S3**	**ME3L**	195	320	472	142	33	—	—	—	—	—	—
F 25 4	**S05**	**M05**	121	283	394.5	95	17	460.5	18	96	122	116	95
F 25 4	**S1**	**M1**	138	291.5	423.5	108	19	484.5	21	103	135	124	108
F 25 4	**S2**	**ME2S**	156	300.5	452.5	119	22	—	—	—	—	—	—
F 25 4	**S3**	**ME3S**	195	320	495.5	142	27	—	—	—	—	—	—
F 25 4	**S3**	**ME3L**	195	320	527.5	142	34	—	—	—	—	—	—

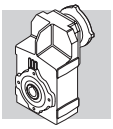

F 25...P(IEC)

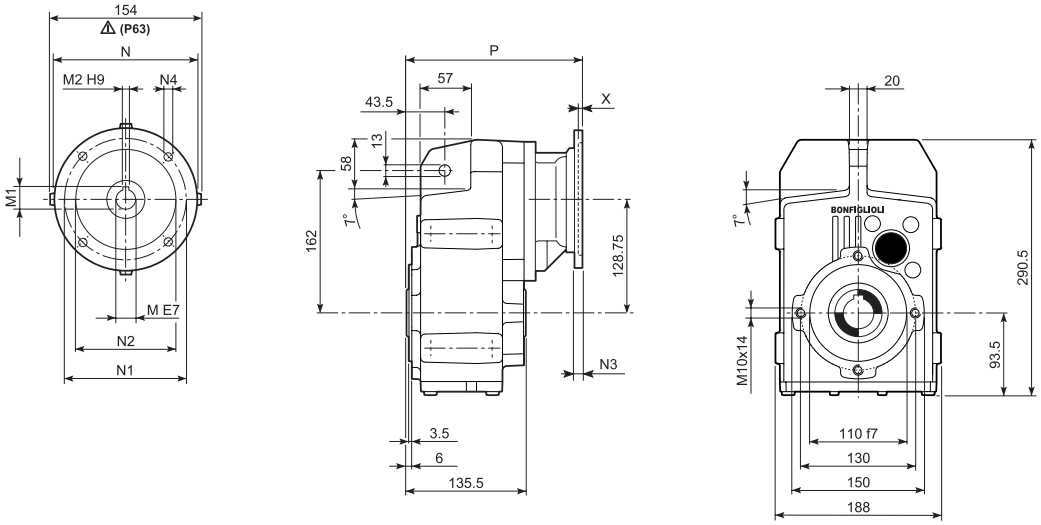

		M	M1	M2	N	N1	N2	N3	N4	X	P	Kg
F 25 2/3	**P63**	11	12.8	4	140	115	95	—	M8x19	4	213	12
F 25 2/3	**P71**	14	16.3	5	160	130	110	—	M8x16	4.5	213	12
F 25 2/3	**P80**	19	21.8	6	200	165	130	—	M10x12	4	232.5	13
F 25 2/3	**P90**	24	27.3	8	200	165	130	—	M10x12	4	232.5	13
F 25 2/3	**P100**	28	31.3	8	250	215	180	—	M12x16	4.5	242.5	16
F 25 2/3	**P112**	28	31.3	8	250	215	180	—	M12x16	4.5	242.5	16
F 25 4	**P63**	11	12.8	4	140	115	95	—	M8x19	4	268.5	13
F 25 4	**P71**	14	16.3	5	160	130	110	—	M8x16	4.5	268.5	13
F 25 4	**P80**	19	21.8	6	200	165	130	—	M10x12	4	288	14
F 25 4	**P90**	24	27.3	8	200	165	130	—	M10x12	4	288	14
F 25 4	**P100**	28	31.3	8	250	215	180	—	M12x16	4.5	298	18
F 25 4	**P112**	28	31.3	8	250	215	180	—	M12x16	4.5	298	18

F 25...HS

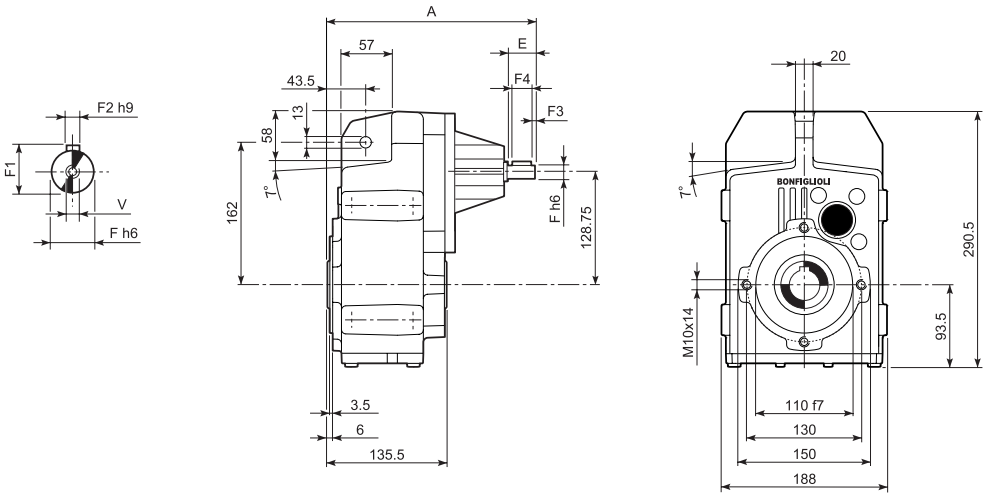

		A	E	F	F1	F2	F3	F4	V	Kg
F 25 2	**HS**	263	40	19	21.5	6	2.5	35	M6x16	11.5
F 25 3		263	40	19	21.5	6	2.5	35	M6x16	11.5
F 25 4		275.5	40	16	18	5	2.5	35	M6x16	12.5

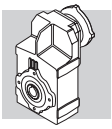

F 25...SK / SC

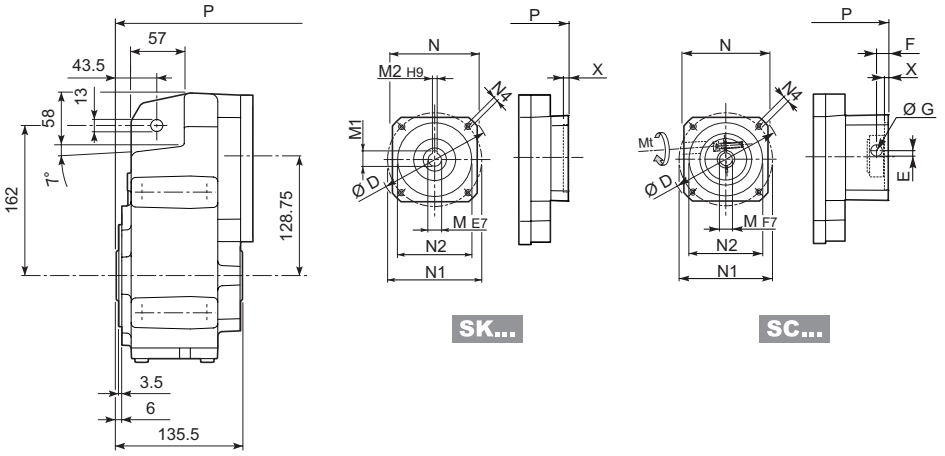

											2/3x		4x	
		D	M	M1	M2	N	N1	N2	N4	X	P	Kg	P	Kg
F 25 2/3/4	**SK 60A**	102	11	12.8	4	82	75	60	M5x10	3.5	184.5	11	240	12
F 25 2/3/4	**SK 60B**	102	14	16.3	5	82	75	60	M5x10	4	191.5	12	247	13
F 25 2/3/4	**SK 80A**	115	14	16.3	5	90	100	80	M6x12	4	191.5	12	247	13
F 25 2/3/4	**SK 80C**	120	19	21.8	6	96	100	80	M6x12	4	232.5	13	288	14
F 25 2/3/4	**SK 95A**	130	14	16.3	5	102	115	95	M8x12	4	232.5	13	288	14
F 25 2/3/4	**SK 95B**	130	19	21.8	6	102	115	95	M8x12	4	232.5	13	288	14
F 25 2/3/4	**SK 95C**	130	24	27.3	8	102	115	95	M8x12	4	232.5	13	288	14
F 25 2/3/4	**SK 110A**	150	19	21.8	6	120	130	110	M8x12	5	232.5	13	288	14
F 25 2/3/4	**SK 110B**	150	24	27.3	8	120	130	110	M8x12	5	232.5	13	288	14

														2/3x		4x	
			Mt [Nm]	D	E	F	G	M	N	N1	N2	N4	X	P	Kg	P	Kg
F 25 2/3/4	**SC 60A**	M6	15	102	7	12.5	12.5	11	82	75	60	M5x10	4	211.5	12	267	13
F 25 2/3/4	**SC 60B**	M6	15	102	7	12.5	12.5	14	82	75	60	M5x10	4	211.5	13	267	14
F 25 2/3/4	**SC 80A**	M6	15	115	6	12.5	12.5	14	90	100	80	M6x12	4	211.5	13	267	14
F 25 2/3/4	**SC 80C**	M6	15	120	15.5	14.5	17.75	19	96	100	80	M6x12	4	256	14	311.5	15
F 25 2/3/4	**SC 95A**	M6	15	130	16.5	15	17.75	14	102	115	95	M8x16	4	256	14	311.5	15
F 25 2/3/4	**SC 95B**	M6	15	130	16.5	15	17.75	19	102	115	95	M8x16	4	256	14	311.5	15
F 25 2/3/4	**SC 95C**	M6	15	130	16.5	15	17.75	24	102	115	95	M8x16	4	256	14	311.5	15
F 25 2/3/4	**SC 110A**	M6	15	150	16.5	16	17.75	19	120	130	110	M8x16	5	256	15	311.5	16
F 25 2/3/4	**SC 110B**	M6	15	150	16.5	16	17.75	24	120	130	110	M8x16	5	256	15	311.5	16

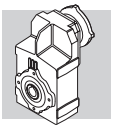

F 25

F 25...H

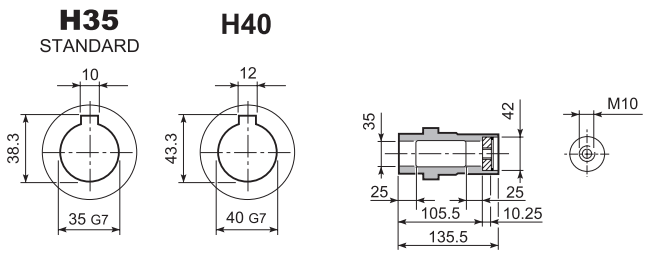

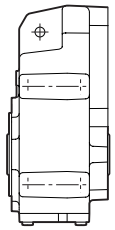

F 25...S

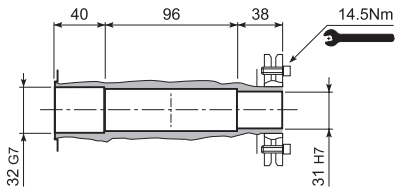

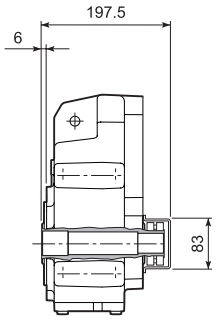

F 25...R

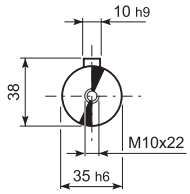

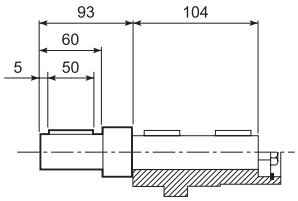

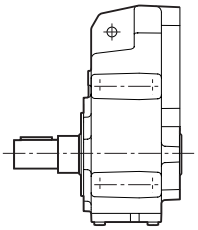

F 25...QF

	Ø
QF30	30
QF32	32

$M_{n2\ max}$ [Nm]	
F 25 QF30	350

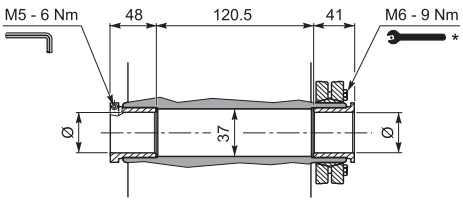

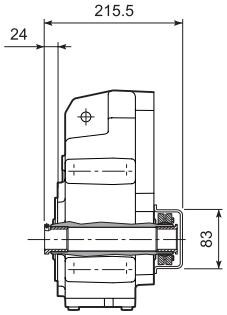

F 25...F...

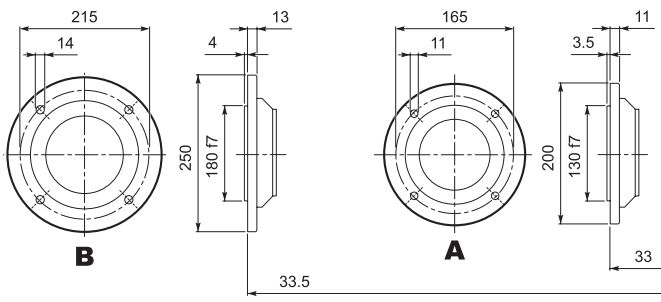

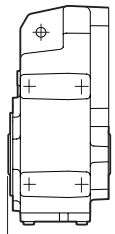

* Befolgen Sie die MONTAGEANLEITUNG die dem Getriebe beiliegt.

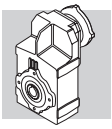

F 31...M/ME/MX

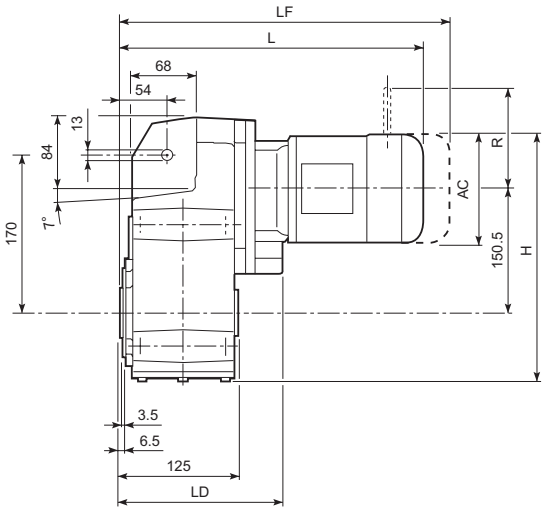

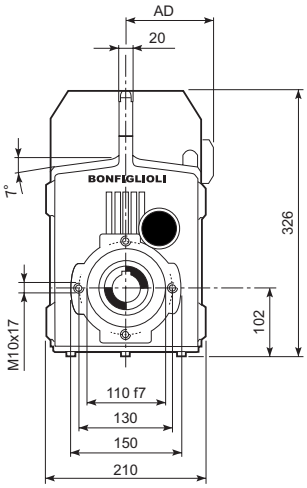

										M...FD M...FA		M...FD		M...FA	
				AC	H	L	LD	AD	Kg	LF	Kg	R	AD	R	AD
F 31 2/3	**S1**	**M1**		138	321.3	380.5	183.5	108	22	441.5	25	103	135	124	108
F 31 2/3	**S2**	**ME2S**		156	330.3	409.5	195.5	119	26	—	—	—	—	—	—
F 31 2/3	**S3**	**ME3S**		195	349.8	452.5	205.5	142	31	—	—	—	—	—	—
F 31 2/3	**S3**	**ME3L**		195	349.8	484.5	205.5	142	40	—	—	—	—	—	—
F 31 2/3	**S4**	**ME4**	**MX4**	258	381.3	592.5	—	193	72	—	—	—	—	—	—
F 31 2/3	**S4**	**ME4LA**	**MX4LA**	258	381.3	592.5	—	193	78	—	—	—	—	—	—
F 31 4	**S05**	**M05**		121	312.8	409	—	95	20	475	22	96	122	116	95
F 31 4	**S1**	**M1**		138	321.3	438	—	108	22	499	25	103	135	124	108
F 31 4	**S2**	**ME2S**		156	330.3	467	—	119	26	—	—	—	—	—	—
F 31 4	**S3**	**ME3S**		195	349.8	510	—	142	31	—	—	—	—	—	—
F 31 4	**S3**	**ME3L**		195	349.8	542	—	142	41	—	—	—	—	—	—

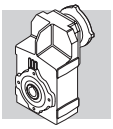

F 31...P(IEC)

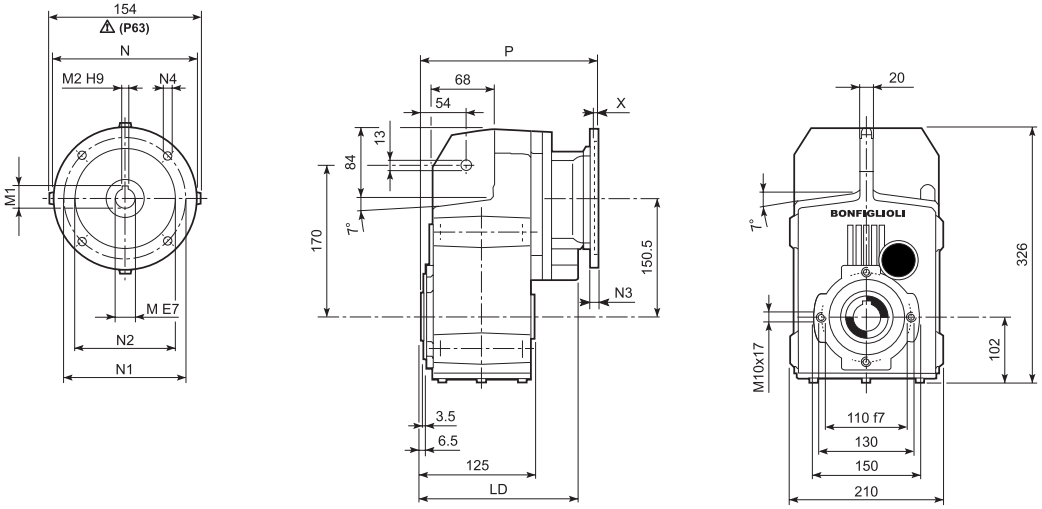

		LD	M	M1	M2	N	N1	N2	N3	N4	X	P	Kg
F 31 2/3	**P63**	195.5	11	12.8	4	140	115	95	—	M8x19	4	225.5	17
F 31 2/3	**P71**	195.5	14	16.3	5	160	130	110	—	M8x16	4.5	225.5	17
F 31 2/3	**P80**	205.5	19	21.8	6	200	165	130	—	M10x12	4	245	18
F 31 2/3	**P90**	205.5	24	27.3	8	200	165	130	—	M10x12	4	245	17
F 31 2/3	**P100**	205.5	28	31.3	8	250	215	180	—	M12x16	4.5	255	21
F 31 2/3	**P112**	205.5	28	31.3	8	250	215	180	—	M12x16	4.5	255	21
F 31 2/3	**P132**	—	38	41.3	10	300	265	230	—	14	5	291.5	24
F 31 4	**P63**	—	11	12.8	4	140	115	95	—	M8x19	4	283	17
F 31 4	**P71**	—	14	16.3	5	160	130	110	—	M8x16	4.5	283	17
F 31 4	**P80**	—	19	21.8	6	200	165	130	—	M10x12	4	302.5	18
F 31 4	**P90**	—	24	27.3	8	200	165	130	—	M10x12	4	302.5	18
F 31 4	**P100**	—	28	31.3	8	250	215	180	—	M12x16	4.5	312.5	22
F 31 4	**P112**	—	28	31.3	8	250	215	180	—	M12x16	4.5	312.5	22

F 31...HS

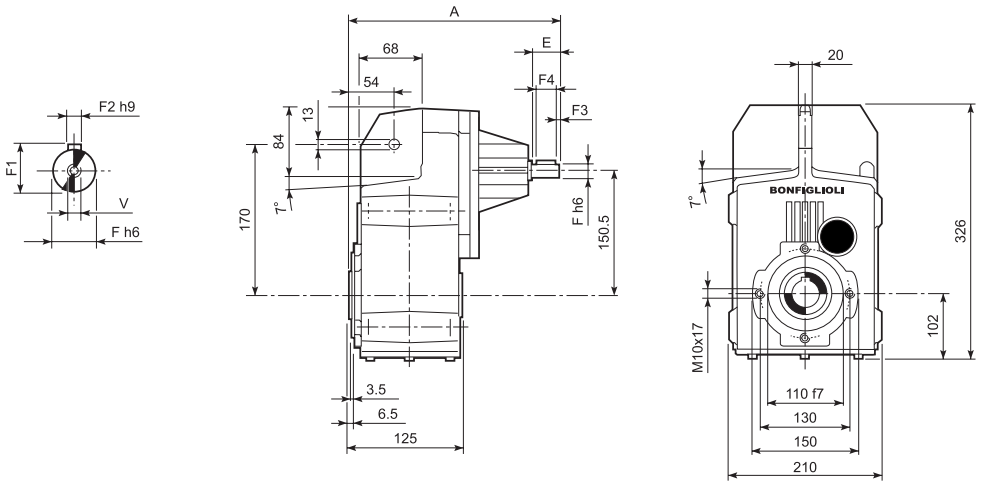

		A	E	F	F1	F2	F3	F4	V	Kg
F 31 2	**HS**	275.5	40	19	21.5	6	2.5	35	M6x16	16.7
F 31 3		275.5	40	19	21.5	6	2.5	35	M6x16	16.7
F 31 4		290	40	16	18	5	2.5	35	M6x16	16.5

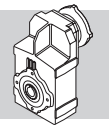

F 31...SK / SC

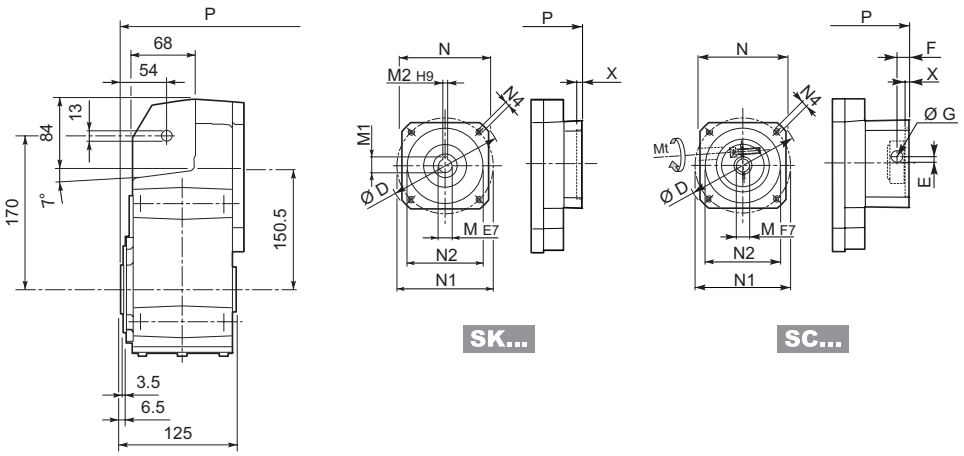

											2/3x		4x	
		D	M	M1	M2	N	N1	N2	N4	X	P	Kg	P	Kg
F 31 2/3/4	**SK 60A**	102	11	12.8	4	82	75	60	M5x10	3.5	197	16	254.5	16
F 31 2/3/4	**SK 60B**	102	14	16.3	5	82	75	60	M5x10	4	204	17	261.5	17
F 31 2/3/4	**SK 80A**	115	14	16.3	5	90	100	80	M6x12	4	204	17	261.5	17
F 31 2/3/4	**SK 80C**	120	19	21.8	6	96	100	80	M6x12	4	245	18	302.5	18
F 31 2/3/4	**SK 95A**	130	14	16.3	5	102	115	95	M8x12	4	245	18	302.5	18
F 31 2/3/4	**SK 95B**	130	19	21.8	6	102	115	95	M8x12	4	245	18	302.5	18
F 31 2/3/4	**SK 95C**	130	24	27.3	8	102	115	95	M8x12	4	245	18	302.5	18
F 31 2/3/4	**SK 110A**	150	19	21.8	6	120	130	110	M8x12	5	245	18	302.5	18
F 31 2/3/4	**SK 110B**	150	24	27.3	8	120	130	110	M8x12	5	245	18	302.5	18
F 31 2/3	**SK 130A**	188	24	27.3	8	142	165	130	M10x20	5	245	18	—	—

													2/3x		4x	
			Mt [Nm]	D	E	F	G	M	N	N1	N2	N4	X	P	Kg	P	Kg
F 31 2/3/4	**SC 60A**	M6	15	102	7	12.5	12.5	11	82	75	60	M5x10	4	224	17	281.5	17
F 31 2/3/4	**SC 60B**	M6	15	102	7	12.5	12.5	14	82	75	60	M5x10	4	224	18	281.5	18
F 31 2/3/4	**SC 80A**	M6	15	115	6	12.5	12.5	14	90	100	80	M6x12	4	224	18	281.5	18
F 31 2/3/4	**SC 80C**	M6	15	120	15.5	14.5	17.75	19	96	100	80	M6x12	4	268.5	19	326	19
F 31 2/3/4	**SC 95A**	M6	15	130	16.5	15	17.75	14	102	115	95	M8x16	4	268.5	19	326	19
F 31 2/3/4	**SC 95B**	M6	15	130	16.5	15	17.75	19	102	115	95	M8x16	4	268.5	19	326	19
F 31 2/3/4	**SC 95C**	M6	15	130	16.5	15	17.75	24	102	115	95	M8x16	4	268.5	19	326	19
F 31 2/3/4	**SC 110A**	M6	15	150	16.5	16	17.75	19	120	130	110	M8x16	5	268.5	20	326	20
F 31 2/3/4	**SC 110B**	M6	15	150	16.5	16	17.75	24	120	130	110	M8x16	5	268.5	20	326	20
F 31 2/3	**SC 130A**	M6	15	188	19	16	17.75	24	142	165	130	M10x20	5	268.5	21	—	—

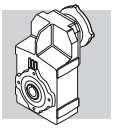

F 31

F 31...H

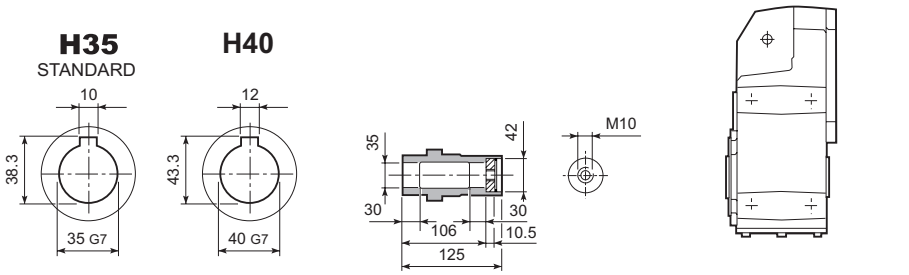

F 31...S

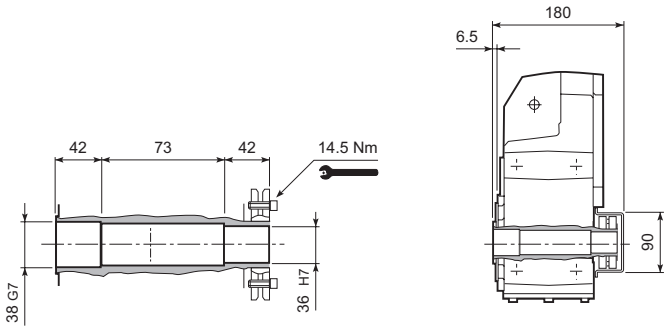

F 31...R

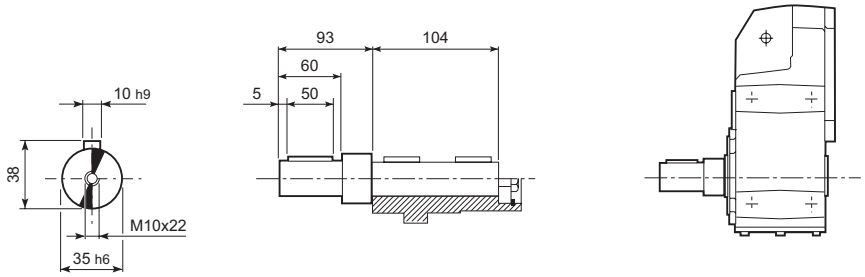

F 31...QF

	Ø
QF35	35
QF40	40

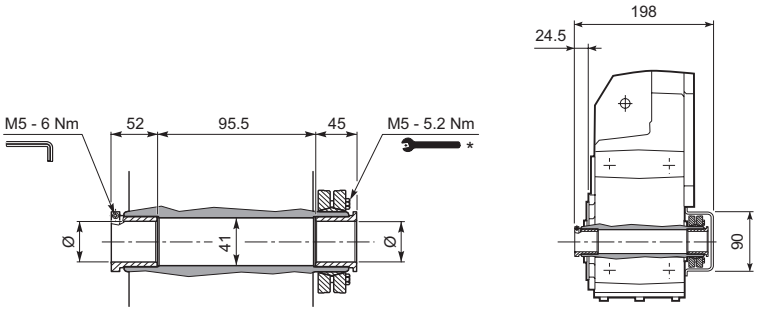

F 31...F...

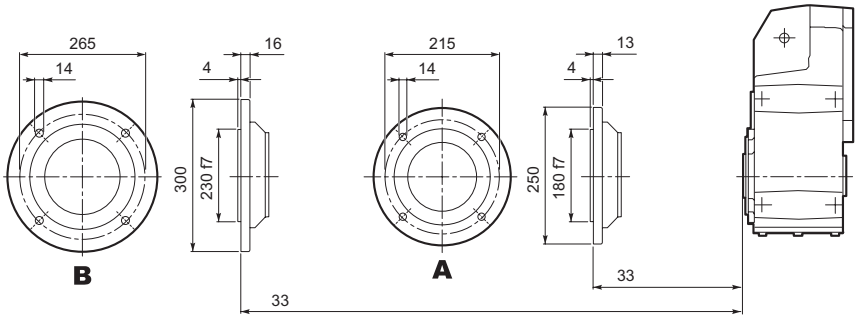

* Befolgen Sie die MONTAGEANLEITUNG die dem Getriebe beiliegt.

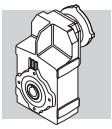

F 41...M/ME/MX

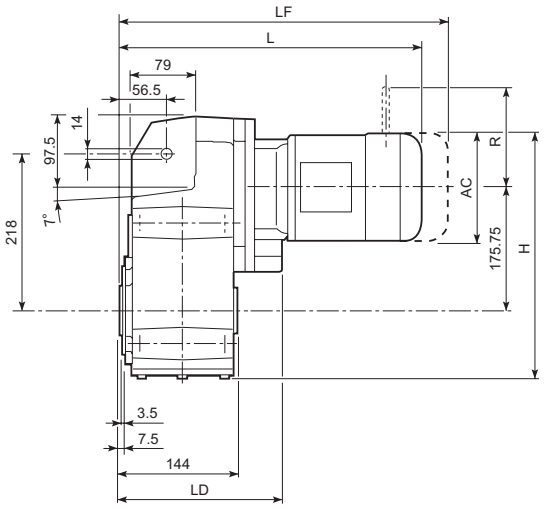

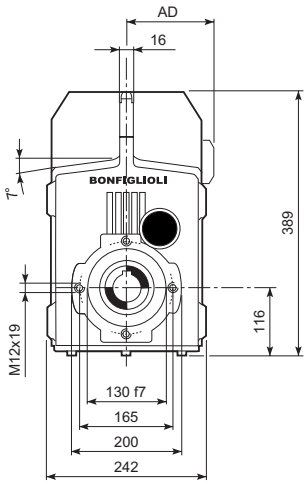

										M...FD M...FA		M...FD		M...FA	
				AC	H	L	LD	AD	Kg	LF	Kg	R	AD	R	AD
F 41 2/3	**S1**	**M1**		138	360.8	401	199.5	108	46	462	48	103	135	124	108
F 41 2/3	**S2**	**ME2S**		156	369.8	430	215	119	49	—	—	—	—	—	—
F 41 2/3	**S3**	**ME3S**		195	389.3	473	231	142	54	—	—	—	—	—	—
F 41 2/3	**S3**	**ME3L**		195	389.3	505	231	142	64	—	—	—	—	—	—
F 41 2/3	**S4**	**ME4**	**MX4**	258	420.8	613	—	193	96	—	—	—	—	—	—
F 41 2/3	**S4**	**ME4LB**	**MX4LA**	258	420.8	648	—	193	104	—	—	—	—	—	—
F 41 4	**S05**	**M05**		231	352.3	433.5	—	95	45	499.5	46	96	122	116	95
F 41 4	**S1**	**M1**		138	360.8	462.5	—	108	47	523.5	49	103	135	124	108
F 41 4	**S2**	**ME2S**		156	369.8	491.5	—	119	50	—	—	—	—	—	—
F 41 4	**S3**	**ME3S**		195	389.3	534.5	—	142	55	—	—	—	—	—	—
F 41 4	**S3**	**ME3L**		195	389.3	566.5	—	142	65	—	—	—	—	—	—

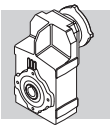

F 41...P(IEC)

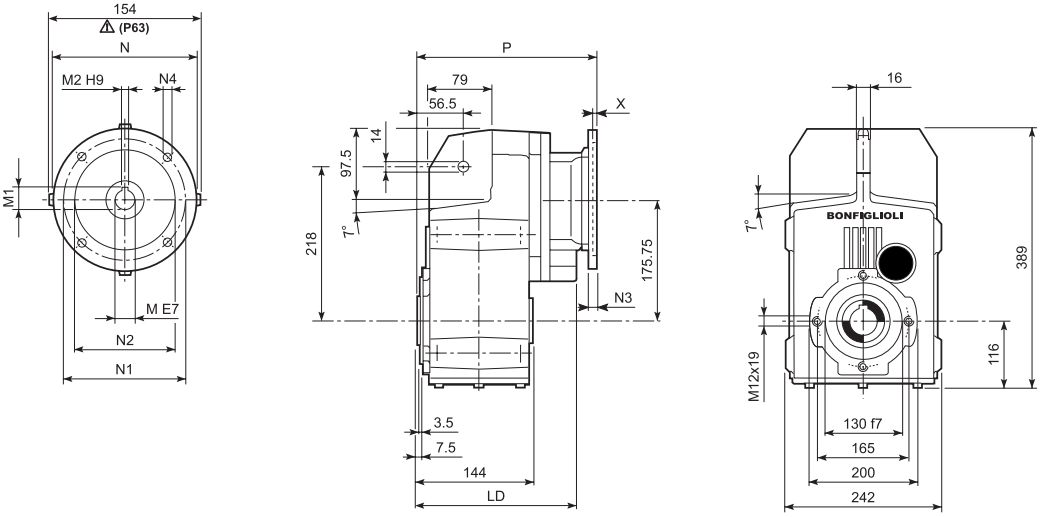

		LD	M	M1	M2	N	N1	N2	N3	N4	X	P	Kg
F 41 2/3	**P63**	215	11	12.8	4	140	115	95	—	M8x19	4	246	42
F 41 2/3	**P71**	215	14	16.3	5	160	130	110	—	M8x16	4.5	246	42
F 41 2/3	**P80**	231	19	21.8	6	200	165	130	—	M10x12	4	265.5	43
F 41 2/3	**P90**	231	24	27.3	8	200	165	130	—	M10x12	4	265.5	43
F 41 2/3	**P100**	231	28	31.3	8	250	215	180	—	M12x16	4.5	275.5	47
F 41 2/3	**P112**	231	28	31.3	8	250	215	180	—	M12x16	4.5	275.5	47
F 41 2/3	**P132**	—	38	41.3	10	300	265	230	16	14	5	312	50
F 41 4	**P63**	—	11	12.8	4	140	115	95	—	M8x19	4	307.5	44
F 41 4	**P71**	—	14	16.3	5	160	130	110	—	M8x16	4.5	307.5	44
F 41 4	**P80**	—	19	21.8	6	200	165	130	—	M10x12	4	327	45
F 41 4	**P90**	—	24	27.3	8	200	165	130	—	M10x12	4	327	45
F 41 4	**P100**	—	28	31.3	8	250	215	180	—	M12x16	4.5	337	49
F 41 4	**P112**	—	28	31.3	8	250	215	180	—	M12x16	4.5	337	49

F 41...HS

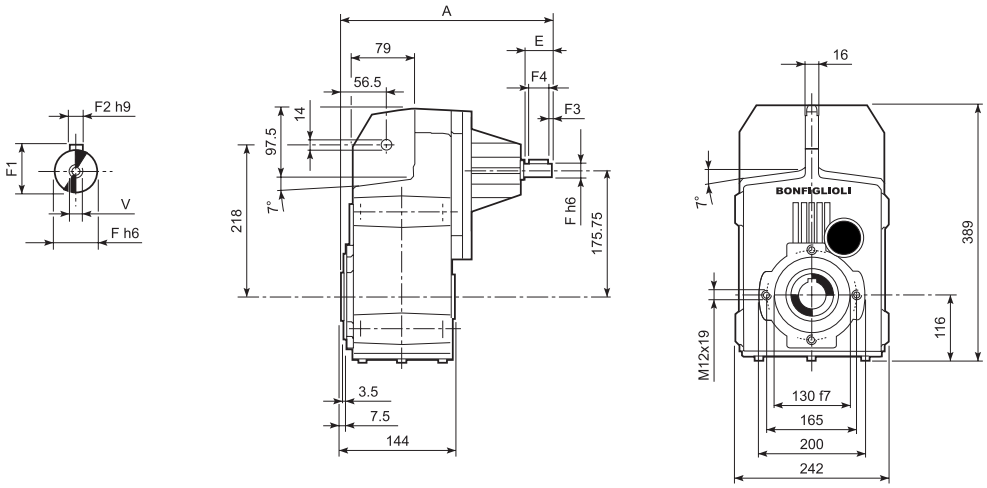

		A	E	F	F1	F2	F3	F4	V	Kg
F 41 2	**HS**	335.5	50	24	27	8	2.5	45	M8x19	44.9
F 41 3		335.5	50	24	27	8	2.5	45	M8x19	46.4
F 41 4		357.5	40	19	21.5	6	2.5	35	M6x16	43.5

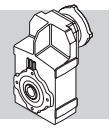

F 41...SK / SC

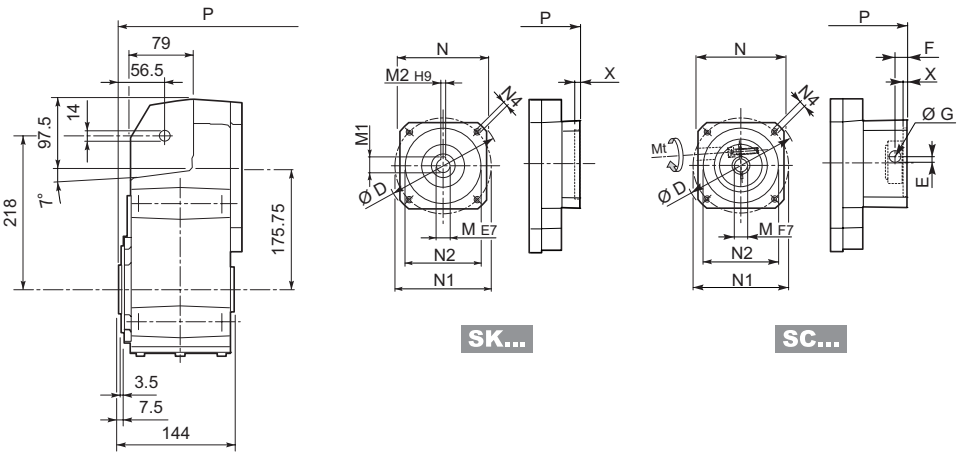

											2/3x		4x	
		D	M	M1	M2	N	N1	N2	N4	X	P	Kg	P	Kg
F 41 4	**SK 60A**	102	11	12.8	4	82	75	60	M5x10	3.5	—	—	279	43
F 41 4	**SK 60B**	102	14	16.3	5	82	75	60	M5x10	4	—	—	286	44
F 41 4	**SK 80A**	115	14	16.3	5	90	100	80	M6x12	4	—	—	286	44
F 41 2/3	**SK 80B**	120	14	16.3	5	96	100	80	M6x12	4	265.5	43	—	—
F 41 2/3/4	**SK 80C**	120	19	21.8	6	96	100	80	M6x12	4	265.5	43	327	45
F 41 2/3/4	**SK 95A**	130	14	16.3	5	102	115	95	M8x12	4	265.5	43	327	45
F 41 2/3/4	**SK 95B**	130	19	21.8	6	102	115	95	M8x12	4	265.5	43	327	45
F 41 2/3/4	**SK 95C**	130	24	27.3	8	102	115	95	M8x12	4	265.5	43	327	45
F 41 2/3/4	**SK 110A**	150	19	21.8	6	120	130	110	M8x12	5	265.5	43	327	45
F 41 2/3/4	**SK 110B**	150	24	27.3	8	120	130	110	M8x12	5	265.5	43	327	45
F 41 2/3	**SK 130A**	188	24	27.3	8	142	165	130	M10x20	5	265.5	45	—	—
F 41 2/3	**SK 130B**	189	32	35.3	10	160	165	130	M10x20	5	312	47	—	—
F 41 2/3	**SK 180A**	240	32	35.3	10	192	215	180	M12x19	5	312	47	—	—
F 41 2/3	**SK 180B**	240	38	41.3	10	192	215	180	M12x19	5	312	47	—	—

														2/3x		4x	
			Mt [Nm]	D	E	F	G	M	N	N1	N2	N4	X	P	Kg	P	Kg
F 41 4	**SC 60A**	M6	15	102	7	12.5	12.5	11	82	75	60	M5x10	4	—	—	306	44
F 41 4	**SC 60B**	M6	15	102	7	12.5	12.5	14	82	75	60	M5x10	4	—	—	306	45
F 41 4	**SC 80A**	M6	15	115	6	12.5	12.5	14	90	100	80	M6x12	4	—	—	306	45
F 41 2/3	**SC 80B**	M6	15	120	15.5	14.5	17.75	14	96	100	80	M6x12	4	289	44	—	—
F 41 2/3/4	**SC 80C**	M6	15	120	15.5	14.5	17.75	19	96	100	80	M6x12	4	289	44	350.5	46
F 41 2/3/4	**SC 95A**	M6	15	130	16.5	15	17.75	14	102	115	95	M8x16	4	289	44	350.5	46
F 41 2/3/4	**SC 95B**	M6	15	130	16.5	15	17.75	19	102	115	95	M8x16	4	289	44	350.5	46
F 41 2/3/4	**SC 95C**	M6	15	130	16.5	15	17.75	24	102	115	95	M8x16	4	289	44	350.5	46
F 41 2/3/4	**SC 110A**	M6	15	150	16.5	16	17.75	19	120	130	110	M8x16	5	289	45	350.5	47
F 41 2/3/4	**SC 110B**	M6	15	150	16.5	16	17.75	24	120	130	110	M8x16	5	289	45	350.5	47
F 41 2/3	**SC 130A**	M6	15	188	19	16	17.75	24	142	165	130	M10x20	5	289	46	—	—
F 41 2/3	**SC 130B**	M8	36	189	20	17	17.75	32	160	165	130	M10x20	5	335	50	—	—
F 41 2/3	**SC 180A**	M8	36	240	20	17.5	17.75	32	192	215	180	M12x24	5	339	50	—	—
F 41 2/3	**SC 180B**	M8	36	240	20	17.5	17.75	38	192	215	180	M12x24	5	339	50	—	—

F 41

F 41...H

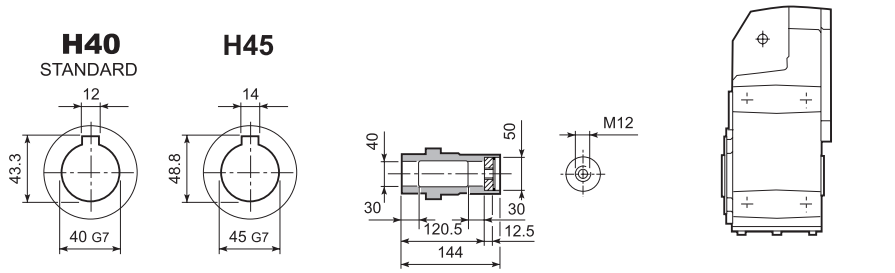

F 41...S

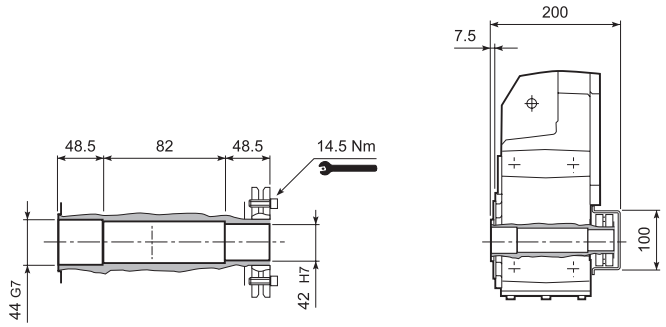

F 41...R

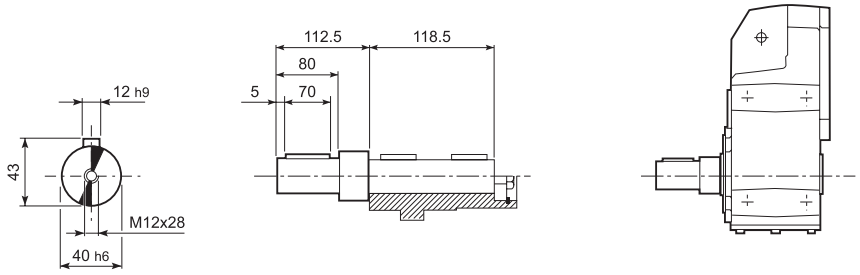

F 41...QF

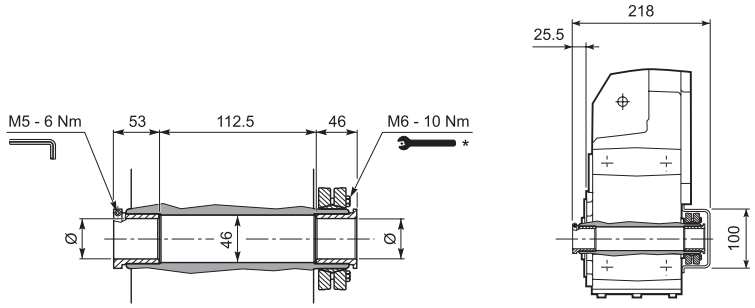

	Ø
QF42	42
QF45	45

	$M_{n2\ max}$ [Nm]
F 41 QF42	850
F 41 QF45	1000

F 41...F...

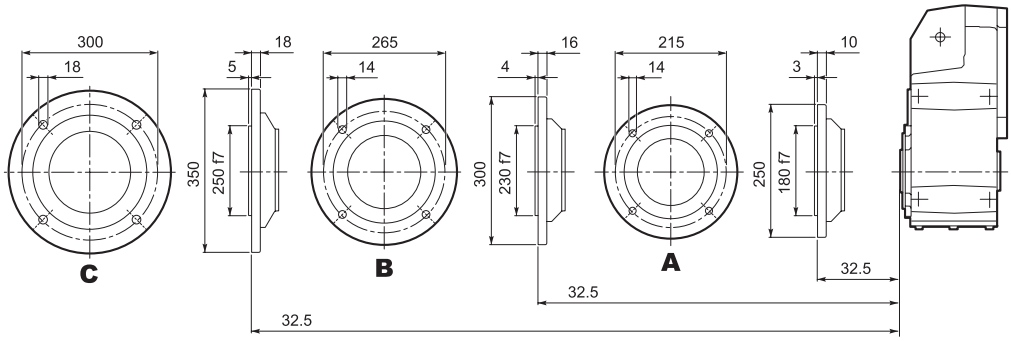

* Befolgen Sie die MONTAGEANLEITUNG die dem Getriebe beiliegt.

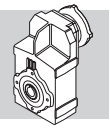

F 51...M/ME/MX

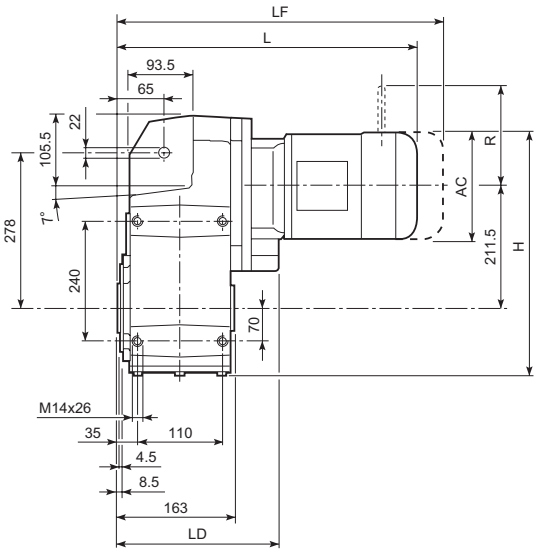

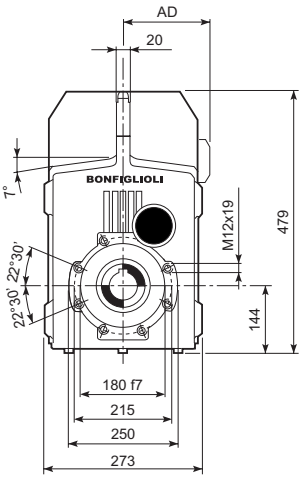

										M...FD M...FA		M...FD		M...FA	
				AC	H	L	LD	AD	Kg	LF	Kg	R	AD	R	AD
F 51 2/3	**S1**	**M1**		138	424	423	—	108	73	484	76	103	135	124	108
F 51 2/3	**S2**	**ME2S**		156	433	452	238	119	73	—	—	—	—	—	—
F 51 2/3	**S3**	**ME3S**		195	452.5	495	253	142	77	—	—	—	—	—	—
F 51 2/3	**S3**	**ME3L**		195	452.5	527	253	142	87	—	—	—	—	—	—
F 51 2/3	**S4**	**ME4**	**MX4**	258	484	635	238	193	119	—	—	—	—	—	—
F 51 2/3	**S4**	**ME4LB**	**MX4LA**	258	484	670	238	193	127	—	—	—	—	—	—
F 51 2/3	**S5**	**ME5S**	**ME5S**	310	510	721.5	—	245	153	—	—	—	—	—	—
F 51 2/3	**S5**	**ME5L**	**ME5L**	310	510	765.5	—	245	169	—	—	—	—	—	—
F 51 4	**S1**	**M1**		138	424	494.5	—	108	75	555.5	78	103	135	124	108
F 51 4	**S2**	**ME2S**		156	433	523.5	—	119	79	—	—	—	—	—	—
F 51 4	**S3**	**ME3S**		195	452.5	566.5	—	142	84	—	—	—	—	—	—
F 51 4	**S3**	**ME3L**		195	452.5	598.5	—	142	93	—	—	—	—	—	—

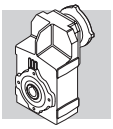

F 51...P(IEC)

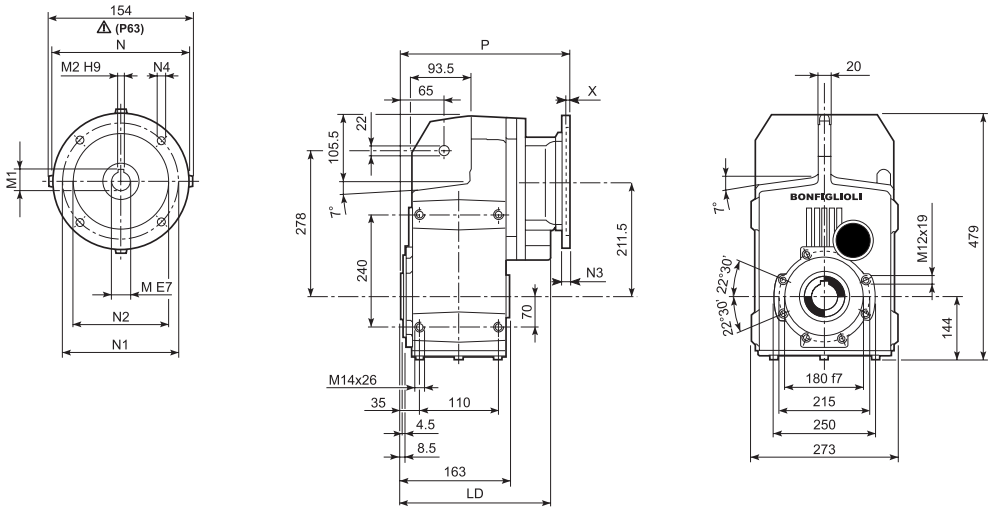

		LD	M	M1	M2	N	N1	N2	N3	N4	X	P	Kg
F 51 2/3	**P63**	238	11	12.8	4	140	115	95	—	M8x19	4	268	65
F 51 2/3	**P71**	238	14	16.3	5	160	130	110	—	M8x16	4.5	268	65
F 51 2/3	**P80**	253	19	21.8	6	200	165	130	—	M10x12	4	287.5	67
F 51 2/3	**P90**	253	24	27.3	8	200	165	130	—	M10x12	4	287.5	67
F 51 2/3	**P100**	238	28	31.3	8	250	215	180	—	M12x16	4.5	297.5	71
F 51 2/3	**P112**	238	28	31.3	8	250	215	180	—	M12x16	4.5	297.5	71
F 51 2/3	**P132**	238	38	41.3	10	300	265	230	16	14	5	334	74
F 51 2/3	**P160**	—	42	45.3	12	350	300	250	23	18	5.5	384.5	78
F 51 2/3	**P180**	—	48	51.8	14	350	300	250	23	18	5.5	384.5	78
F 51 4	**P63**	—	11	12.8	4	140	115	95	—	M8x19	4	339.5	70
F 51 4	**P71**	—	14	16.3	5	160	130	110	—	M8x16	4.5	339.5	70
F 51 4	**P80**	—	19	21.8	6	200	165	130	—	M10x12	4	359	71
F 51 4	**P90**	—	24	27.3	8	200	165	130	—	M10x12	4	359	71
F 51 4	**P100**	—	28	31.3	8	250	215	180	—	M12x16	4.5	369	75
F 51 4	**P112**	—	28	31.3	8	250	215	180	—	M12x16	4.5	369	75
F 51 4	**P132**	—	38	41.3	10	300	265	230	16	14	5	405.5	78

F 51...HS

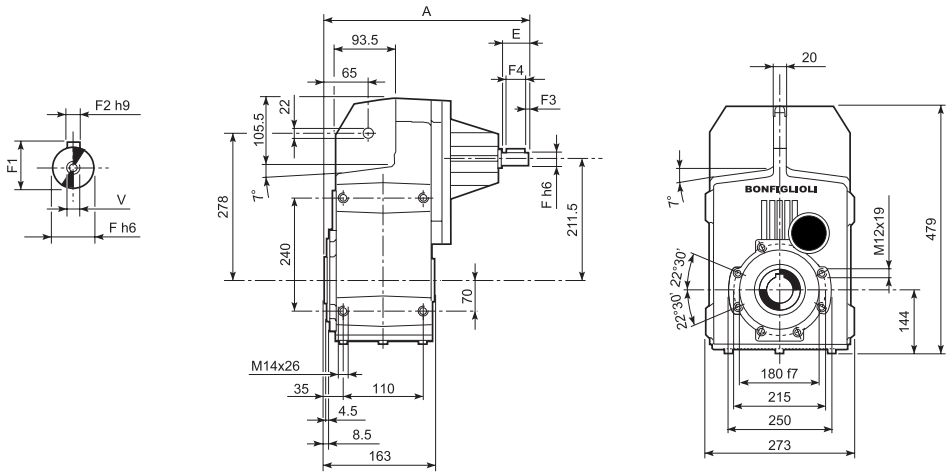

		A	E	F	F1	F2	F3	F4	V	Kg
F 51 2	**HS**	357.5	50	24	27	8	2.5	45	M8x19	65
F 51 3		357.5	50	24	27	8	2.5	45	M8x19	68
F 51 4		389.5	40	19	21.5	6	2.5	35	M6x16	70

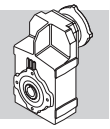

F 51...SK / SC

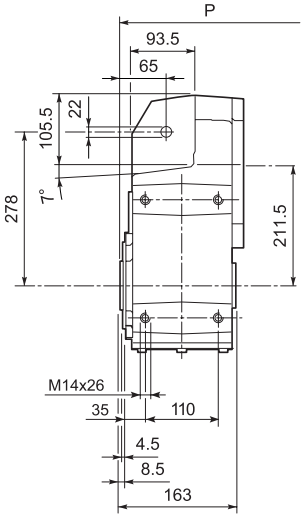

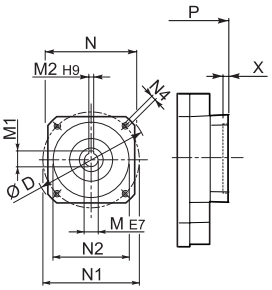

SK...

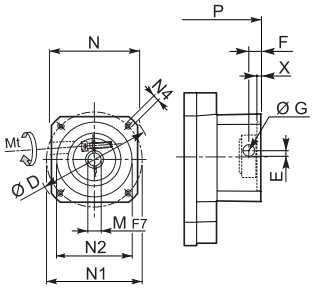

SC...

											2/3x		4x	
		D	M	M1	M2	N	N1	N2	N4	X	P	Kg	P	Kg
F 51 2/3	**SK 80B**	120	14	16.3	5	96	100	80	M6x12	4	287.5	67	—	—
F 51 2/3/4	**SK 80C**	120	19	21.8	6	96	100	80	M6x12	4	287.5	67	359	71
F 51 2/3/4	**SK 95A**	130	14	16.3	5	102	115	95	M8x12	4	287.5	67	359	71
F 51 2/3/4	**SK 95B**	130	19	21.8	6	102	115	95	M8x12	4	287.5	67	359	71
F 51 2/3/4	**SK 95C**	130	24	27.3	8	102	115	95	M8x12	4	287.5	67	359	71
F 51 2/3/4	**SK 110A**	150	19	21.8	6	120	130	110	M8x12	5	287.5	67	359	71
F 51 2/3/4	**SK 110B**	150	24	27.3	8	120	130	110	M8x12	5	287.5	67	359	71
F 51 2/3/4	**SK 130A**	188	24	27.3	8	142	165	130	M10x20	5	287.5	69	359	73
F 51 2/3	**SK 130B**	189	32	35.3	10	160	165	130	M10x20	5	334	75	—	—
F 51 2/3	**SK 180A**	240	32	35.3	10	192	215	180	M12x19	5	334	75	—	—
F 51 2/3	**SK 180B**	240	38	41.3	10	192	215	180	M12x19	5	334	75	—	—

													2/3x		4x	
			Mt [Nm]	D	E	F	G	M	N	N1	N2	N4	X	P	Kg	P	Kg
F 51 2/3	**SC 80B**	M6	15	120	15.5	14.5	17.75	14	96	100	80	M6x12	4	311	70	—	—
F 51 2/3/4	**SC 80C**	M6	15	120	15.5	14.5	17.75	19	96	100	80	M6x12	4	311	70	382.5	74
F 51 2/3/4	**SC 95A**	M6	15	130	16.5	15	17.75	14	102	115	95	M8x16	4	311	70	382.5	74
F 51 2/3/4	**SC 95B**	M6	15	130	16.5	15	17.75	19	102	115	95	M8x16	4	311	70	382.5	74
F 51 2/3/4	**SC 95C**	M6	15	130	16.5	15	17.75	24	102	115	95	M8x16	4	311	70	382.5	74
F 51 2/3/4	**SC 110A**	M6	15	150	16.5	16	17.75	19	120	130	110	M8x16	5	311	71	382.5	75
F 51 2/3/4	**SC 110B**	M6	15	150	16.5	16	17.75	24	120	130	110	M8x16	5	311	71	382.5	75
F 51 2/3/4	**SC 130A**	M6	15	188	19	16	17.75	24	142	165	130	M10x20	5	311	72	382.5	76
F 51 2/3	**SC 130B**	M8	36	189	20	17	17.75	32	160	165	130	M10x20	5	357	75	—	—
F 51 2/3	**SC 180A**	M8	36	240	20	17.5	17.75	32	192	215	180	M12x24	5	361	75	—	—
F 51 2/3	**SC 180B**	M8	36	240	20	17.5	17.75	38	192	215	180	M12x24	5	361	75	—	—

F 51

F 51...H

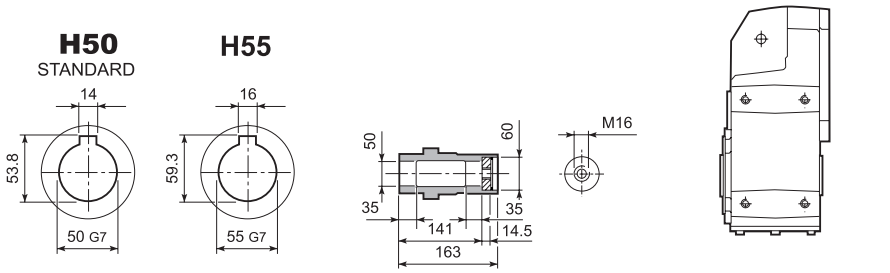

F 51...S

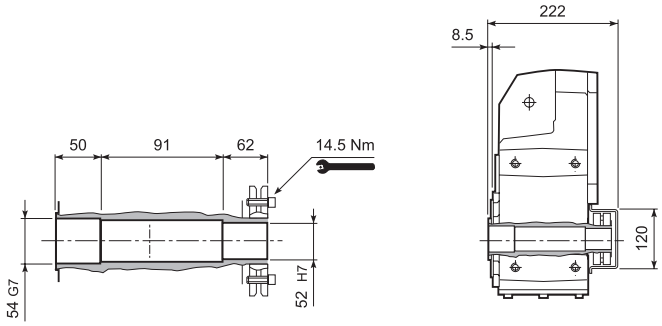

F 51...R

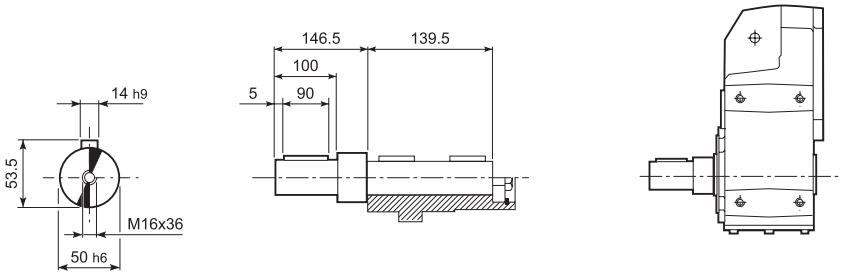

F 51...QF

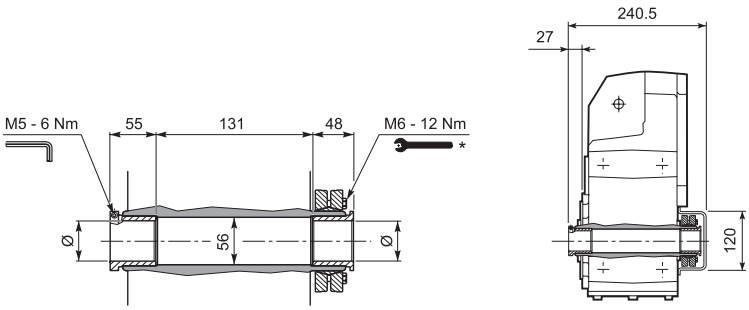

	Ø
QF50	50
QF55	55

	$M_{n2\ max}$ [Nm]
F 51 QF50	1750

F 51...F...

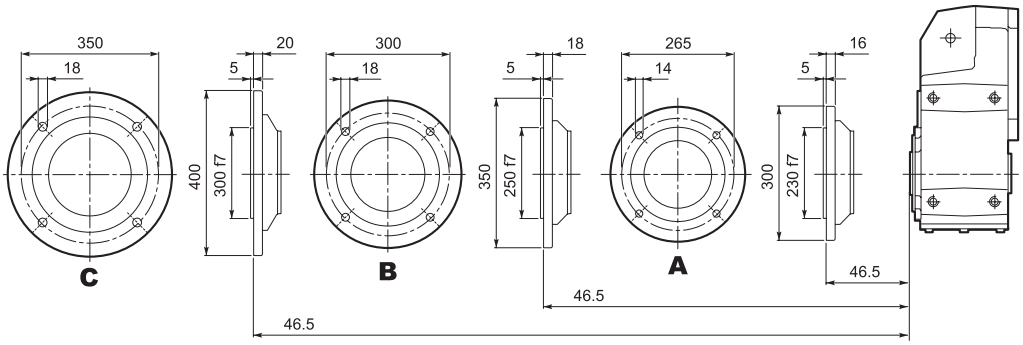

* Befolgen Sie die MONTAGEANLEITUNG die dem Getriebe beiliegt.

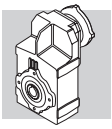

F 60...M/ME/MX

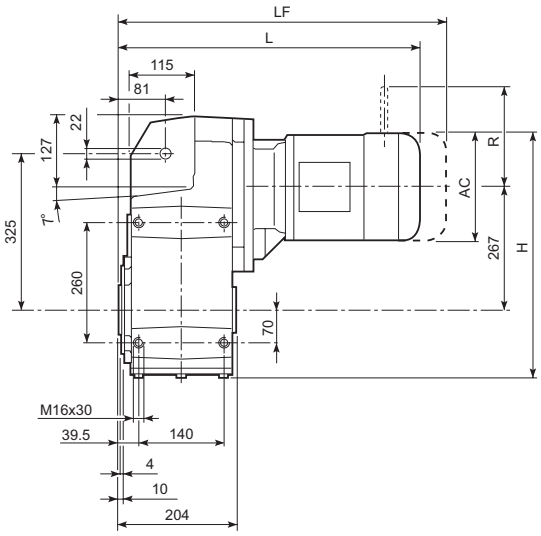

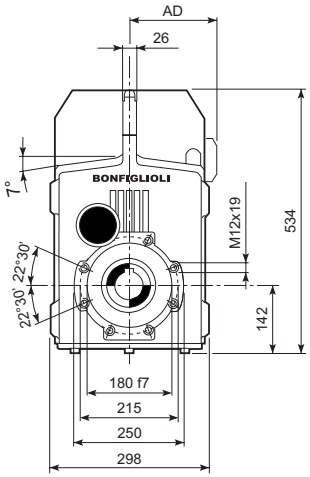

									M...FD M...FA		M...FD		M...FA	
				AC	H	L	AD	Kg	LF	Kg	R	AD	R	AD
F 60 3	**S2**	**ME2S**		156	487	486.5	119	114	—	—	—	—	—	—
F 60 3	**S3**	**ME3S**		195	506.5	529.5	142	114	—	—	—	—	—	—
F 60 3	**S3**	**ME3L**		195	506.5	561.5	142	124	—	—	—	—	—	—
F 60 3	**S4**	**ME4**	**MX4**	258	538	669.5	193	156	—	—	—	—	—	—
F 60 3	**S4**	**ME4LB**	**MX4LA**	258	538	704.5	193	164	—	—	—	—	—	—
F 60 3	**S5**	**ME5S**	**MX5S**	310	564	756	245	184	—	—	—	—	—	—
F 60 3	**S5**	**ME5L**	**MX5L**	310	564	800	245	200	—	—	—	—	—	—
F 60 4	**S1**	**M1**		138	478	528	108	113	589	116	103	135	124	108
F 60 4	**S2**	**ME2S**		156	487	557	119	117	—	—	—	—	—	—
F 60 4	**S3**	**ME3S**		195	506.5	600	142	122	—	—	—	—	—	—
F 60 4	**S3**	**ME3L**		195	506.5	632	142	131	—	—	—	—	—	—
F 60 4	**S4**	**ME4**	**MX4**	258	538	740	193	156	—	—	—	—	—	—
F 60 4	**S4**	**ME4LB**	**MX4LA**	258	538	775	193	164	—	—	—	—	—	—

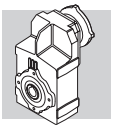

F 60...P(IEC)

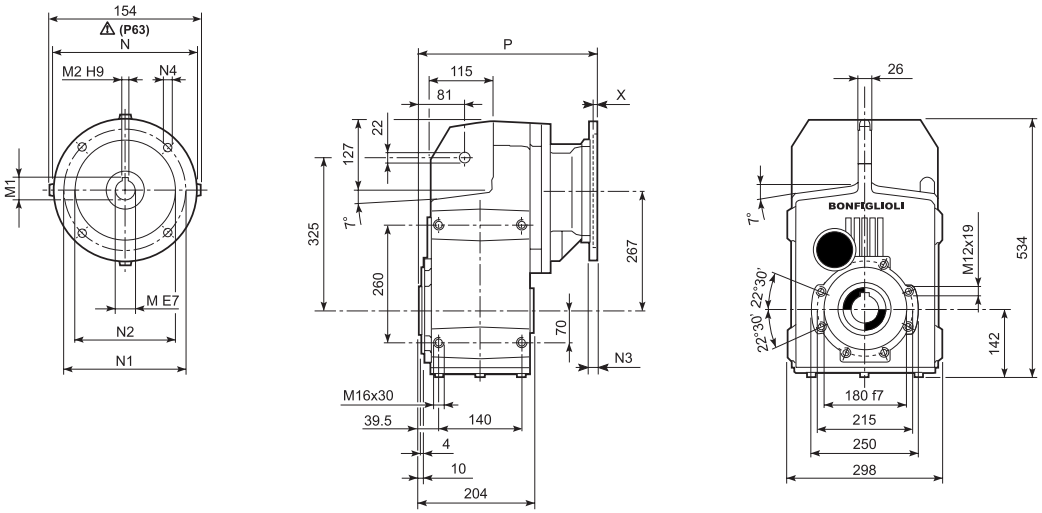

		M	M1	M2	N	N1	N2	N3	N4	X	P	Kg
F 60 3	**P63**	11	12.8	4	140	115	95	—	M8x19	4	302.5	103
F 60 3	**P71**	14	16.3	5	160	130	110	—	M8x16	4.5	302.5	103
F 60 3	**P80**	19	21.8	6	200	165	130	—	M10x12	4	322	104
F 60 3	**P90**	24	27.3	8	200	165	130	—	M10x12	4	322	104
F 60 3	**P100**	28	31.3	8	250	215	180	—	M12x16	4.5	331	108
F 60 3	**P112**	28	31.3	8	250	215	180	—	M12x16	4.5	331	108
F 60 3	**P132**	38	41.3	10	300	265	230	16	14	5	367.5	111
F 60 3	**P160**	42	45.3	12	350	300	250	23	18	5.5	419	116
F 60 3	**P180**	48	51.8	14	350	300	250	23	18	5.5	419	116
F 60 4	**P63**	11	12.8	4	140	115	95	—	M8x19	4	373	108
F 60 4	**P71**	14	16.3	5	160	130	110	—	M8x16	4.5	373	108
F 60 4	**P80**	19	21.8	6	200	165	130	—	M10x12	4	392.5	110
F 60 4	**P90**	24	27.3	8	200	165	130	—	M10x12	4	392.5	110
F 60 4	**P100**	28	31.3	8	250	215	180	—	M12x16	4.5	402.5	114
F 60 4	**P112**	28	31.3	8	250	215	180	—	M12x16	4.5	402.5	114

F 60...HS

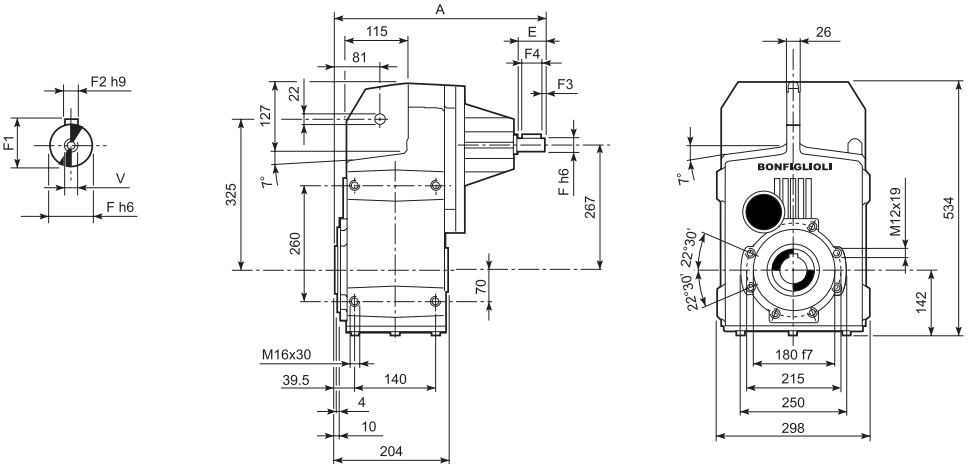

		A	E	F	F1	F2	F3	F4	V	Kg
F 60 3	**HS**	419	60	28	31	8	5.0	50	M10x22	108
F 60 4		462.5	50	24	27	8	2.5	45	M8x19	105

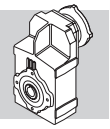

F 60...SK / SC

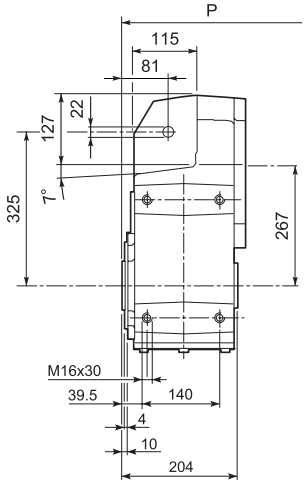

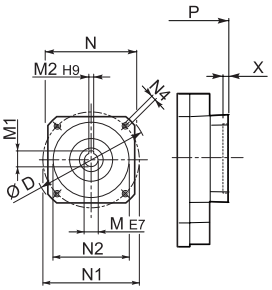

SK...

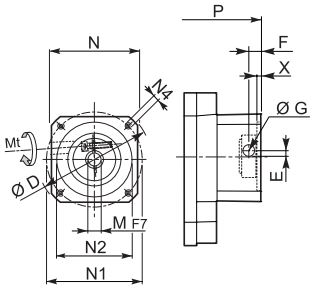

SC...

											2/3x		4x	
		D	M	M1	M2	N	N1	N2	N4	X	P	Kg	P	Kg
F 60 4	**SK 80B**	120	14	16.3	5	96	100	80	M6x12	4	—	—	392.5	109
F 60 3/4	**SK 80C**	120	19	21.8	6	96	100	80	M6x12	4	322	106	392.5	112
F 60 3/4	**SK 95A**	130	14	16.3	5	102	115	95	M8x12	4	322	106	392.5	112
F 60 3/4	**SK 95B**	130	19	21.8	6	102	115	95	M8x12	4	322	106	392.5	112
F 60 3/4	**SK 95C**	130	24	27.3	8	102	115	95	M8x12	4	322	106	392.5	112
F 60 3/4	**SK 110A**	140	19	21.8	6	120	130	110	M8x12	5	322	106	392.5	112
F 60 3/4	**SK 110B**	140	24	27.3	8	120	130	110	M8x12	5	322	106	392.5	112
F 60 3/4	**SK 130A**	188	24	27.3	8	142	165	130	M10x20	5	322	108	392.5	112
F 60 3	**SK 130B**	189	32	35.3	10	160	165	130	M10x20	5	368.5	109	—	—
F 60 3	**SK 180A**	240	32	35.3	10	192	215	180	M12x19	5	368.5	109	—	—
F 60 3	**SK 180B**	240	38	41.3	10	192	215	180	M12x19	5	368.5	109	—	—

													2/3x		4x	
			Mt [Nm]	D	E	F	G	M	N	N1	N2	N4	X	P	Kg	P	Kg
F 60 4	**SC 80B**	M6	15	120	15.5	14.5	17.75	14	96	100	80	M6x12	4	—	—	416	113
F 60 3/4	**SC 80C**	M6	15	120	15.5	14.5	17.75	19	96	100	80	M6x12	4	345.5	107	416	113
F 60 3/4	**SC 95A**	M6	15	130	16.5	15	17.75	14	102	115	95	M8x16	4	345.5	107	416	113
F 60 3/4	**SC 95B**	M6	15	130	16.5	15	17.75	19	102	115	95	M8x16	4	345.5	107	416	113
F 60 3/4	**SC 95C**	M6	15	130	16.5	15	17.75	24	102	115	95	M8x16	4	345.5	107	416	113
F 60 3/4	**SC 110A**	M6	15	140	16.5	16	17.75	19	120	130	110	M8x16	5	345.5	108	416	113
F 60 3/4	**SC 110B**	M6	15	140	16.5	16	17.75	24	120	130	110	M8x16	5	345.5	108	416	113
F 60 3/4	**SC 130A**	M6	15	188	19	16	17.75	24	142	165	130	M10x20	5	345.5	109	416	115
F 60 3	**SC 130B**	M8	36	189	20	17	17.75	32	160	165	130	M10x20	5	390.5	112	—	—
F 60 3	**SC 180A**	M8	36	240	20	17.5	17.75	32	192	215	180	M12x24	5	394.5	112	—	—
F 60 3	**SC 180B**	M8	36	240	20	17.5	17.75	38	192	215	180	M12x24	5	394.5	112	—	—

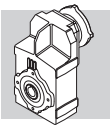

F 60

F 60...H

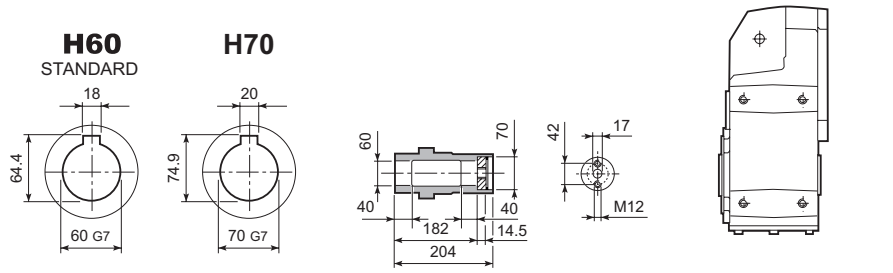

F 60...S

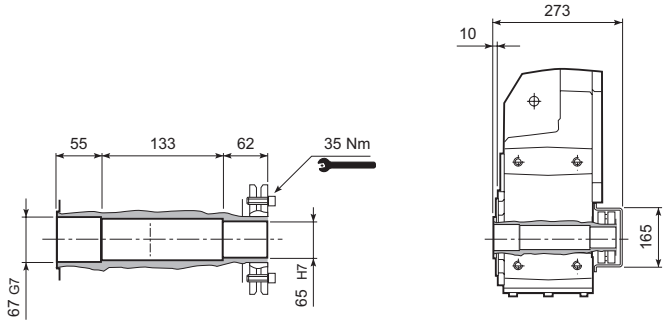

F 60...R

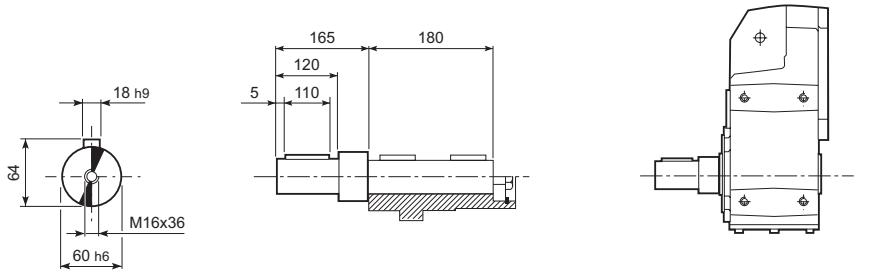

F 60...QF

	Ø
QF60	60
QF65	65
QF70	70

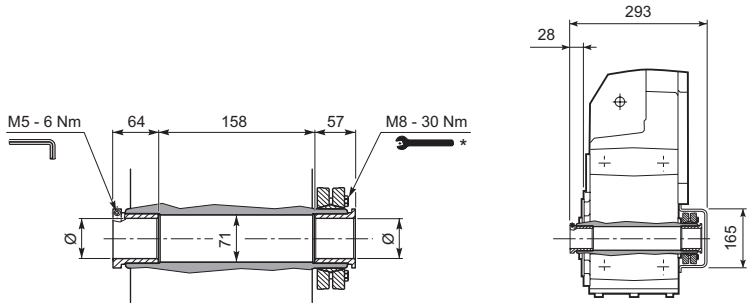

F 60...F...

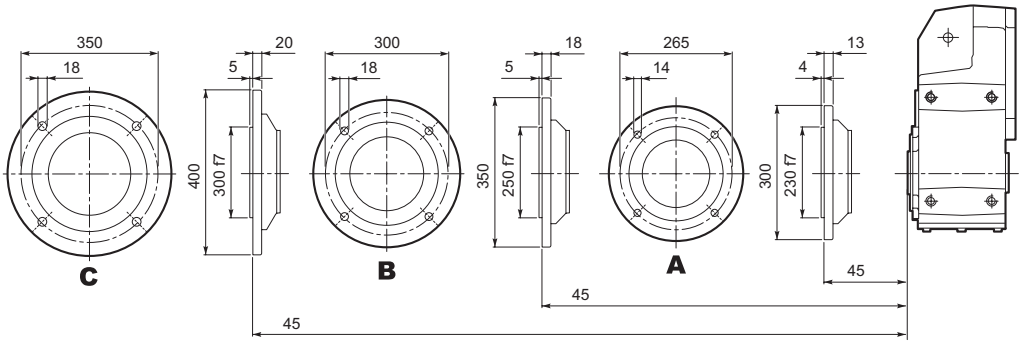

* Befolgen Sie die MONTAGEANLEITUNG die dem Getriebe beiliegt.

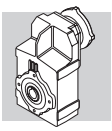

F 70...M/ME/MX

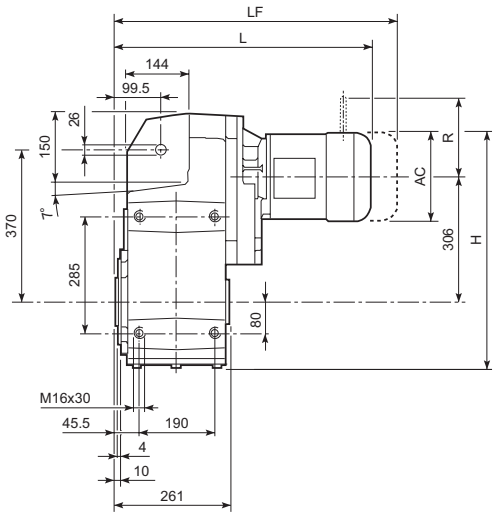

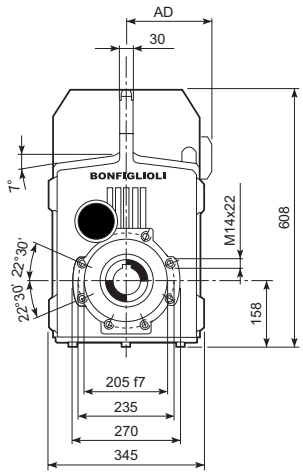

									M...FD M...FA		M...FD		M...FA	
				AC	H	L	AD	Kg	LF	Kg	R	AD	R	AD
F 70 3	**S2**	**ME2S**		156	542	552	119	173	—	—	—	—	—	—
F 70 3	**S3**	**ME3S**		195	561.5	595	142	178	—	—	—	—	—	—
F 70 3	**S3**	**ME3L**		195	561.5	627	142	188	—	—	—	—	—	—
F 70 3	**S4**	**ME4**	**MX4**	258	593	735	193	220	—	—	—	—	—	—
F 70 3	**S4**	**ME4LB**	**MX4LA**	258	593	770	193	228	—	—	—	—	—	—
F 70 3	**S5**	**ME5S**	**MX5S**	310	619	821.5	245	248	—	—	—	—	—	—
F 70 3	**S5**	**ME5L**	**MX5L**	310	619	865.5	245	264	—	—	—	—	—	—
F 70 4	**S1**	**M1**		138	533	574	108	173	635	176	103	135	124	108
F 70 4	**S2**	**ME2S**		156	542	603	119	177	—	—	—	—	—	—
F 70 4	**S3**	**ME3S**		195	561.5	646	142	181	—	—	—	—	—	—
F 70 4	**S3**	**ME3L**		195	561.5	678	142	191	—	—	—	—	—	—
F 70 4	**S4**	**ME4**	**MX4**	258	593	786	193	223	—	—	—	—	—	—
F 70 4	**S4**	**ME4LB**	**MX4LA**	258	593	821	193	231	—	—	—	—	—	—

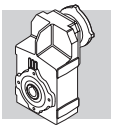

F 70...P(IEC)

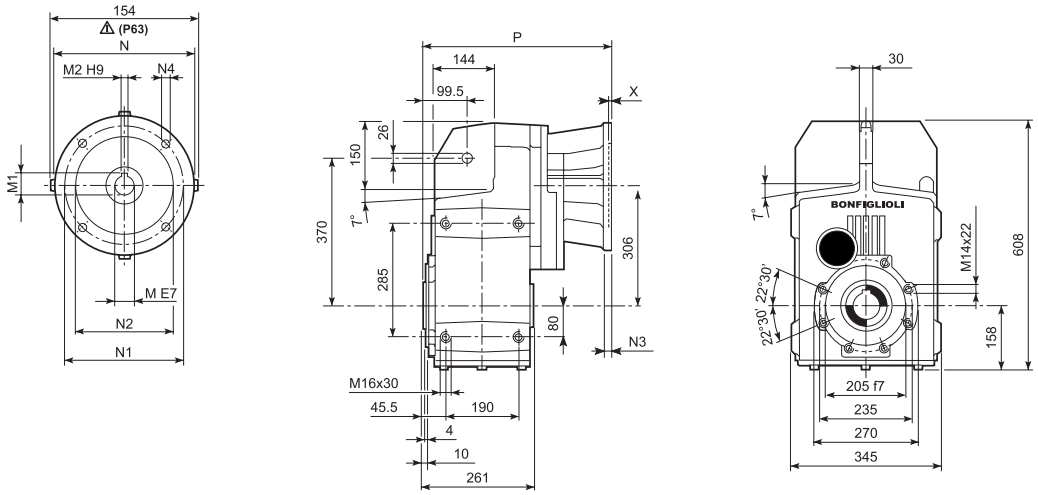

		M	M1	M2	N	N1	N2	N3	N4	X	P	Kg
F 70 3	**P80**	19	21.8	6	200	165	130	—	M10x12	4	387.5	167
F 70 3	**P90**	24	27.3	8	200	165	130	—	M10x12	4	387.5	167
F 70 3	**P100**	28	31.3	8	250	215	180	—	M12x16	4.5	397.5	171
F 70 3	**P112**	28	31.3	8	250	215	180	—	M12x16	4.5	397.5	171
F 70 3	**P132**	38	41.3	10	300	265	230	16	14	5	434	173
F 70 3	**P160**	42	45.3	12	350	300	250	23	18	6	489.5	185
F 70 3	**P180**	48	51.8	14	350	300	250	23	18	6	489.5	185
F 70 3	**P200**	55	59.3	16	400	350	300	—	M16x25	7	514.5	206
F 70 4	**P63**	11	12.8	4	140	115	95	—	M8x19	4	419	168
F 70 4	**P71**	14	16.3	5	160	130	110	—	M8x16	4.5	419	168
F 70 4	**P80**	19	21.8	6	200	165	130	—	M10x12	4	438.5	170
F 70 4	**P90**	24	27.3	8	200	165	130	—	M10x12	4	438.5	170
F 70 4	**P100**	28	31.3	8	250	215	180	—	M12x16	4.5	446.5	174
F 70 4	**P112**	28	31.3	8	250	215	180	—	M12x16	4.5	446.5	174
F 70 4	**P132**	38	41.3	10	300	265	230	16	14	5	482	176

F 70...HS

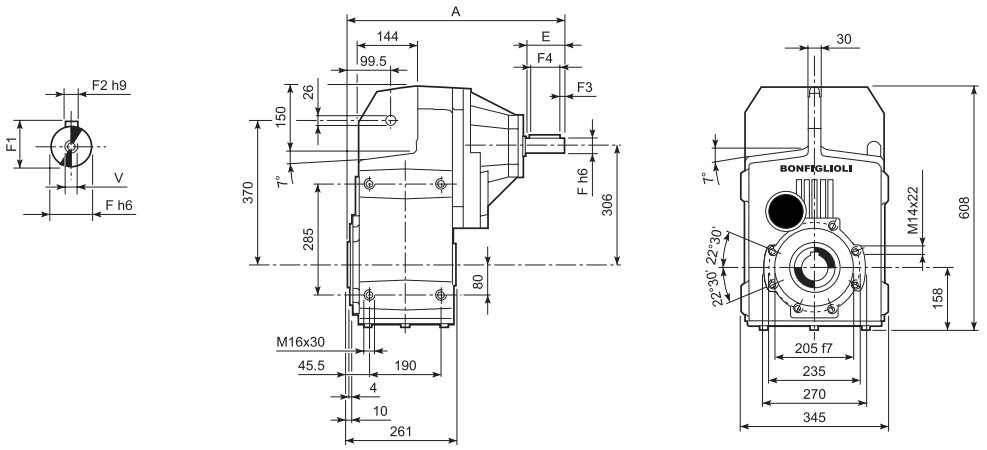

		A	E	F	F1	F2	F3	F4	V	Kg
F 70 3	**HS**	572	110	42	45	12	10	90	M12x28	186
F 70 4		508.5	50	24	27	8	2.5	45	M8x19	174

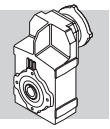

F 70

F 70...H

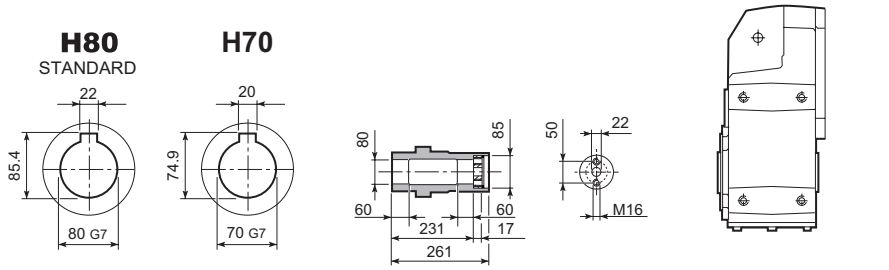

F 70...S

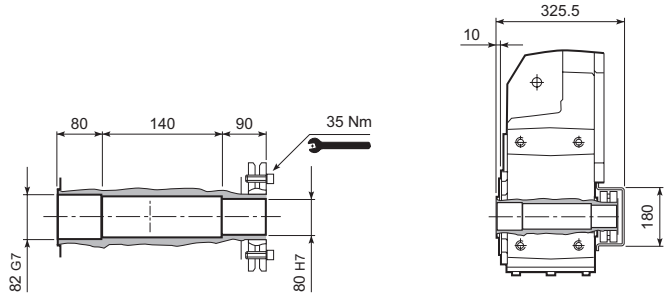

F 70...R

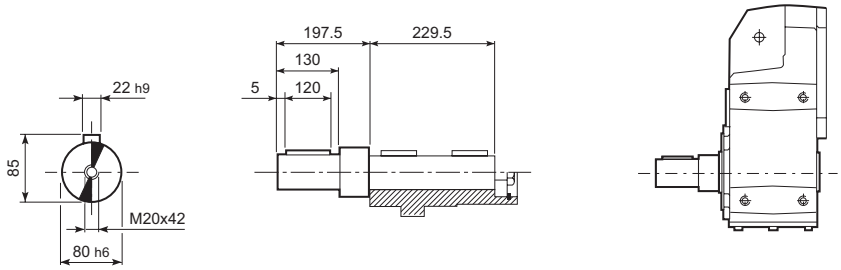

F 70...F...

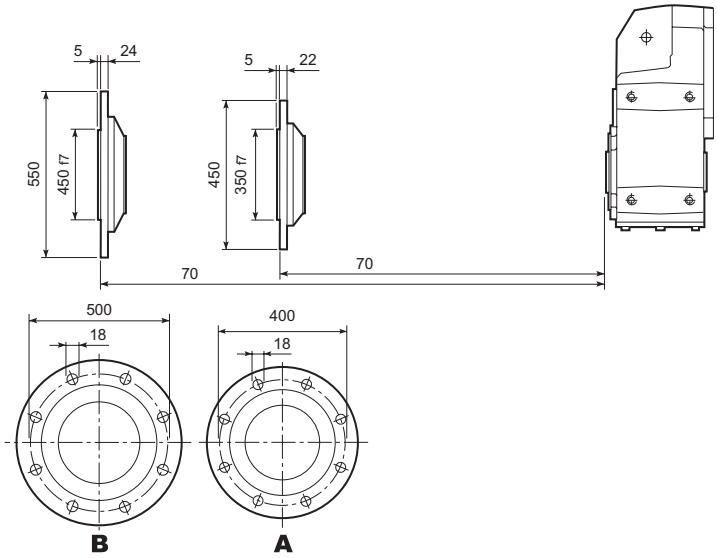

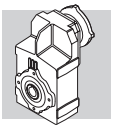

F 80...M/ME/MX

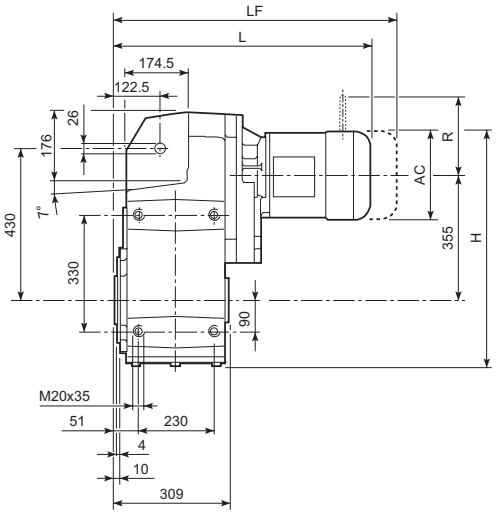

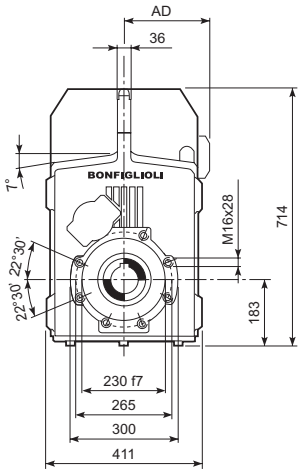

									M...FD M...FA		M...FD		M...FA	
				AC	H	L	AD	Kg	LF	Kg	R	AD	R	AD
F 80 3	**S3**	**ME3S**		195	635.5	653	142	266	—	—	—	—	—	—
F 80 3	**S3**	**ME3L**		195	635.5	685	142	275	—	—	—	—	—	—
F 80 3	**S4**	**ME4**	**MX4**	258	667	793	193	307	—	—	—	—	—	—
F 80 3	**S4**	**ME4LB**	**MX4LA**	258	667	828	193	315	—	—	—	—	—	—
F 80 3	**S5**	**ME5S**	**MX5S**	310	693	879.5	245	335	—	—	—	—	—	—
F 80 3	**S5**	**ME5L**	**MX5L**	310	693	923.5	245	351	—	—	—	—	—	—
F 80 4	**S1**	**M1**		138	607	644	108	262	705	265	103	135	124	108
F 80 4	**S2**	**M2S**		156	616	673	119	266	743	269	129	146	134	119
F 80 4	**S2**	**ME2S**		156	616	673	119	266	—	—	—	—	—	—
F 80 4	**S3**	**ME3S**		195	635.5	716	142	271	—	—	—	—	—	—
F 80 4	**S3**	**ME3L**		195	635.5	748	142	280	—	—	—	—	—	—
F 80 4	**S4**	**ME4**	**MX4**	258	667	856	193	312	—	—	—	—	—	—
F 80 4	**S4**	**ME4LB**	**MX4LA**	258	667	891	193	320	—	—	—	—	—	—

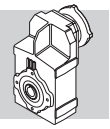

F 80...P(IEC)

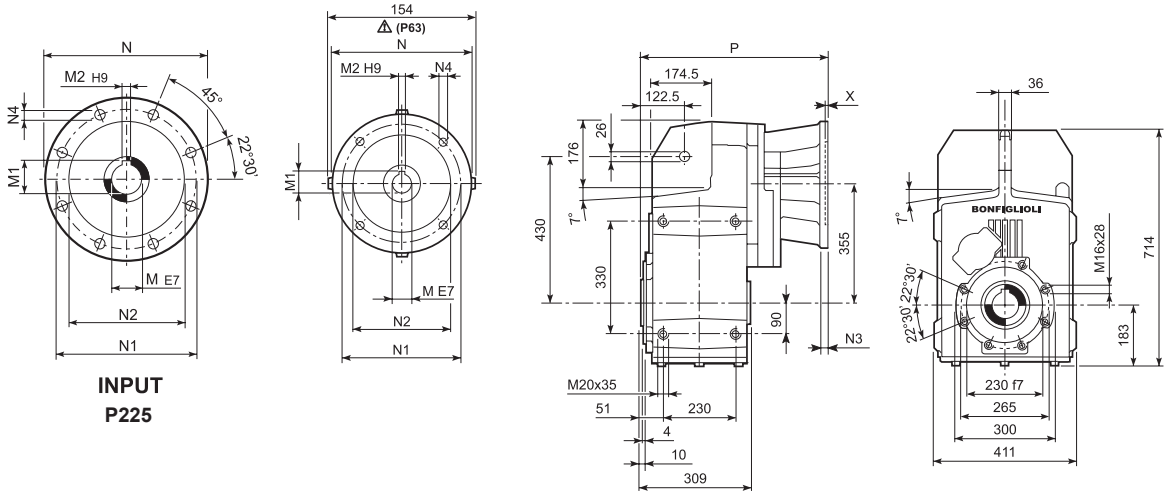

INPUT
P225

		M	M1	M2	N	N1	N2	N3	N4	X	P	Kg
F 80 3	**P80**	19	21.8	6	200	165	130	—	M10x12	4	445.5	255
F 80 3	**P90**	24	27.3	8	200	165	130	—	M10x12	4	445.5	255
F 80 3	**P100**	28	31.3	8	250	215	180	—	M12x16	4.5	455.5	259
F 80 3	**P112**	28	31.3	8	250	215	180	—	M12x16	4.5	455.5	259
F 80 3	**P132**	38	41.3	10	300	265	230	16	14	5	492	261
F 80 3	**P160**	42	45.3	12	350	300	250	23	18	6	547.5	276
F 80 3	**P180**	48	51.8	14	350	300	250	23	18	6	547.5	276
F 80 3	**P200**	55	59.3	16	400	350	300	—	M16x25	7	572.5	298
F 80 3	**P225**	60	64.4	18	450	400	350	25	18	6	618	298
F 80 4	**P63**	11	12.8	4	140	115	95	—	M8x19	4	489	258
F 80 4	**P71**	14	16.3	5	160	130	110	—	M8x16	4.5	489	258
F 80 4	**P80**	19	21.8	6	200	165	130	—	M10x12	4	508.5	260
F 80 4	**P90**	24	27.3	8	200	165	130	—	M10x12	4	508.5	260
F 80 4	**P100**	28	31.3	8	250	215	180	—	M12x16	4.5	518.5	264
F 80 4	**P112**	28	31.3	8	250	215	180	—	M12x16	4.5	518.5	264
F 80 4	**P132**	38	41.3	10	300	265	230	16	14	5	552	266

F 80...HS

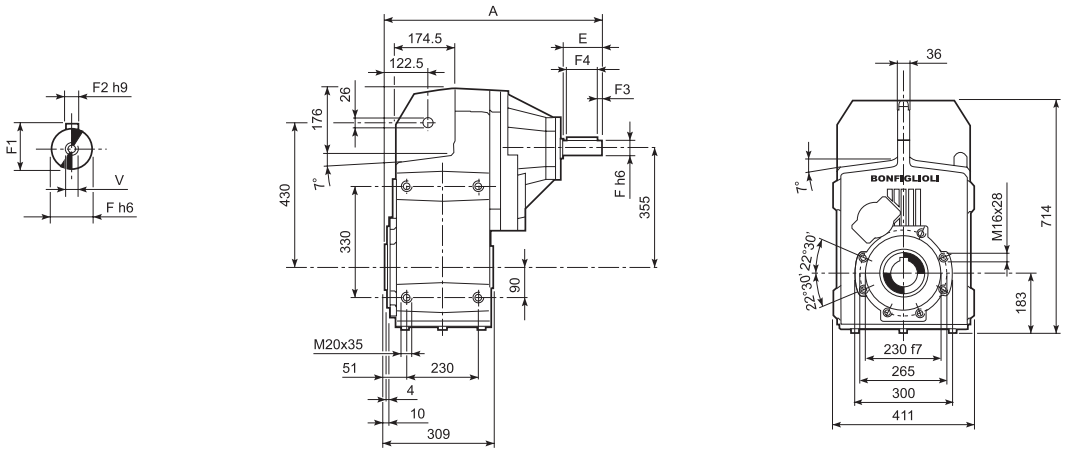

		A	E	F	F1	F2	F3	F4	V	Kg
F 80 3	**HS**	630	110	42	45	12	10	90	M12x28	273
F 80 4		575.5	50	24	27	8	2.5	45	M8x19	263

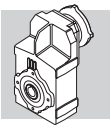

F 80

F 80...H

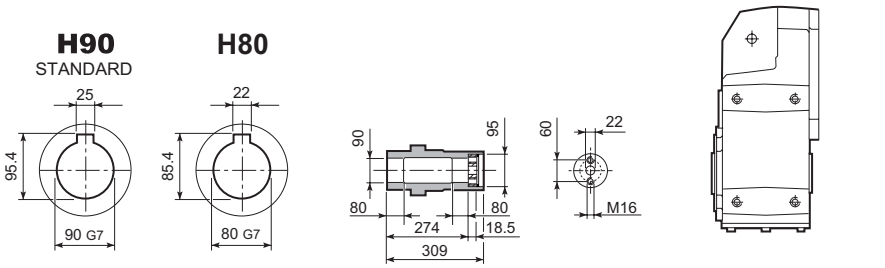

F 80...S

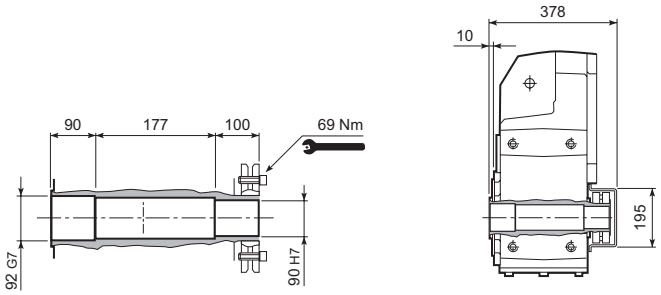

F 80...R

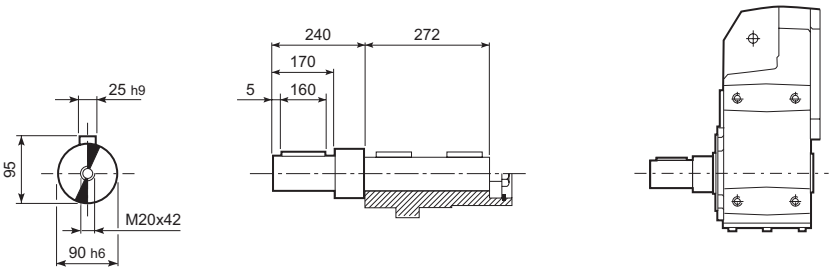

F 80...F...

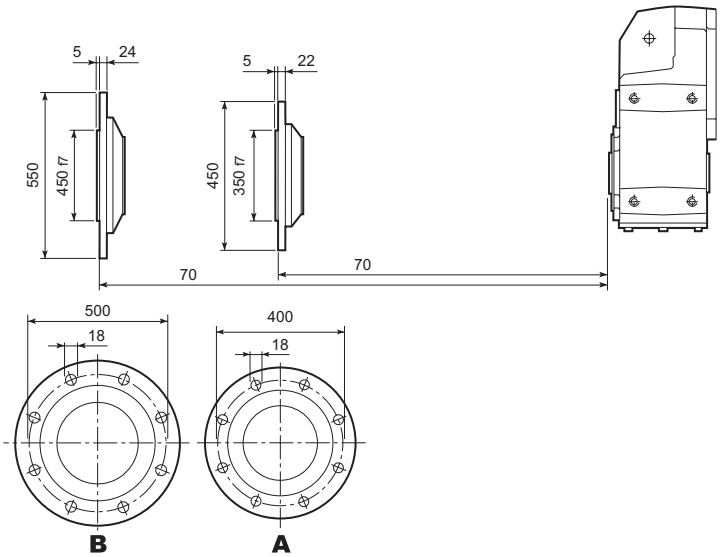

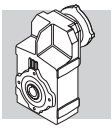

F 90...M/ME/MX

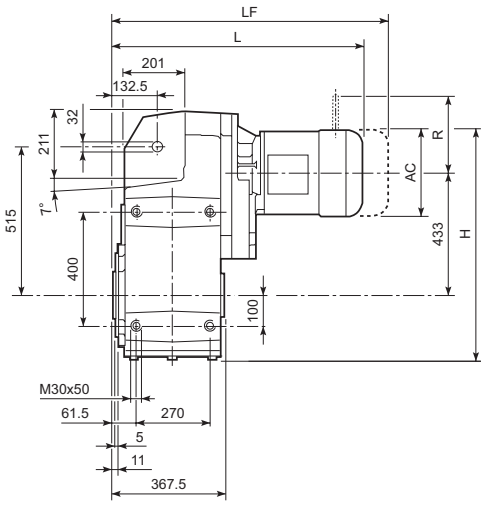

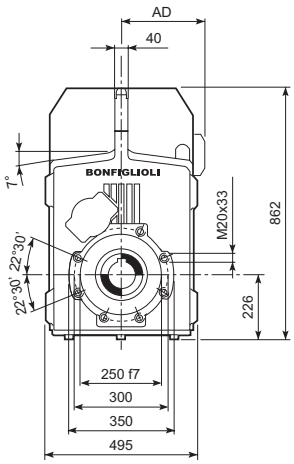

									M...FD M...FA		M...FD		M...FA	
				AC	H	L	AD	Kg	LF	Kg	R	AD	R	AD
F 90 3	**S3**	**ME3S**		195	756	728	142	453	—	—	—	—	—	—
F 90 3	**S3**	**ME3L**		195	756	760	142	462	—	—	—	—	—	—
F 90 3	**S4**	**ME4**	**MX4**	258	787.5	868	193	494	—	—	—	—	—	—
F 90 3	**S5**	**ME5L**	**MX5L**	310	813.5	998.5	245	538	—	—	—	—	—	—
F 90 4	**S2**	**M2S**		156	736.5	768	119	456	838	460	129	146	134	119
F 90 4	**S2**	**ME2S**		156	736.5	768	119	456	—	—	—	—	—	—
F 90 4	**S3**	**ME3S**		195	756	811	142	460	—	—	—	—	—	—
F 90 4	**S3**	**ME3L**		195	756	843	142	470	—	—	—	—	—	—
F 90 4	**S4**	**ME4**	**MX4**	258	787.5	951	193	502	—	—	—	—	—	—
F 90 4	**S4**	**ME4LB**	**MX4LA**	258	787.5	986	193	510	—	—	—	—	—	—

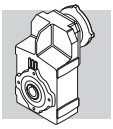

F 90...P(IEC)

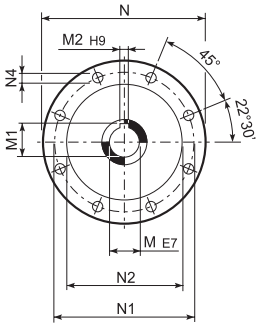

INPUT
P225...P250

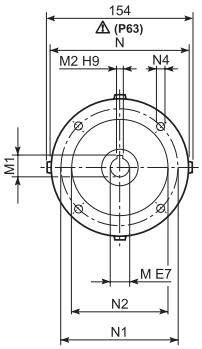

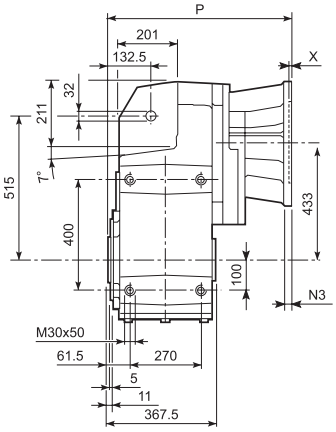

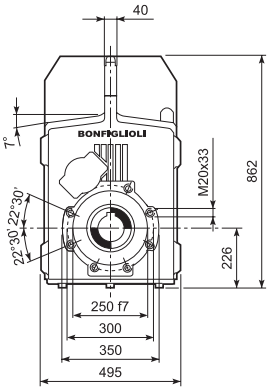

		M	M1	M2	N	N1	N2	N3	N4	X	P	Kg
F 90 3	**P80**	19	21.8	6	200	165	130	—	M10x12	4	520.5	442
F 90 3	**P90**	24	27.3	8	200	165	130	—	M10x12	4	520.5	442
F 90 3	**P100**	28	31.3	8	250	215	180	—	M12x16	4.5	530.5	446
F 90 3	**P112**	28	31.3	8	250	215	180	—	M12x16	4.5	530.5	446
F 90 3	**P132**	38	41.3	10	300	265	230	16	14	5	567	449
F 90 3	**P160**	42	45.3	12	350	300	250	23	18	6	622.5	463
F 90 3	**P180**	48	51.8	14	350	300	250	23	18	6	622.5	463
F 90 3	**P200**	55	59.3	16	400	350	300	—	M16x25	7	647.5	485
F 90 3	**P225**	60	64.4	18	450	400	350	30	18	6	693	485
F 90 3	**P250**	65	69.4	18	550	500	450	30	18	6	723	507
F 90 4	**P63**	11	12.8	4	140	115	95	—	M8x19	4	584	448
F 90 4	**P71**	14	16.3	5	160	130	110	—	M8x16	4.5	584	448
F 90 4	**P80**	19	21.8	6	200	165	130	—	M10x12	4	603.5	450
F 90 4	**P90**	24	27.3	8	200	165	130	—	M10x12	4	603.5	450
F 90 4	**P100**	28	31.3	8	250	215	180	—	M12x16	4.5	613.5	454
F 90 4	**P112**	28	31.3	8	250	215	180	—	M12x16	4.5	613.5	454
F 90 4	**P132**	38	41.3	10	300	265	230	16	14	5	650	455
F 90 4	**P160**	42	45.3	12	350	300	250	23	18	5.5	700.5	461
F 90 4	**P180**	48	51.8	14	350	300	250	23	18	5.5	700.5	461

F 90...HS

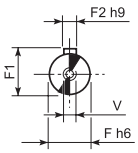

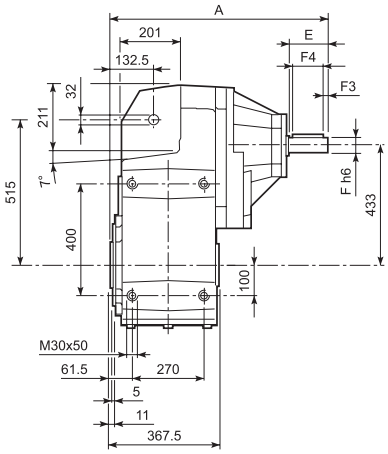

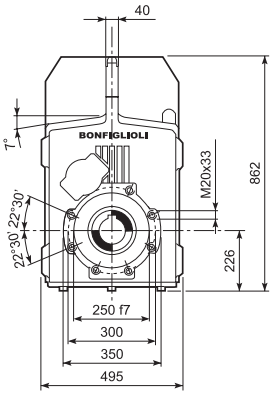

		A	E	F	F1	F2	F3	F4	V	Kg
F 90 3	**HS**	806.5	140	60	64	18	10	120	M16x36	485
F 90 4		673.5	50	24	27	8	2.5	45	M8x19	452

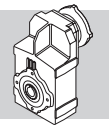

F 90

F 90...H

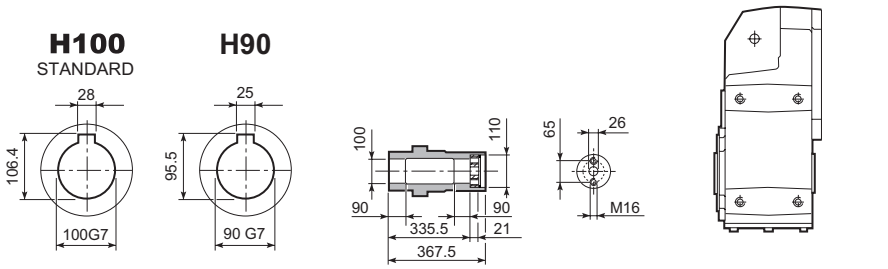

F 90...S

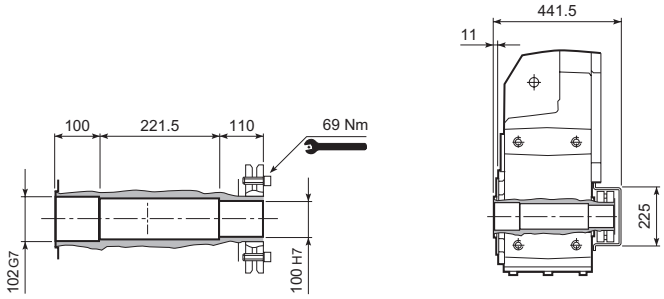

F 90...R

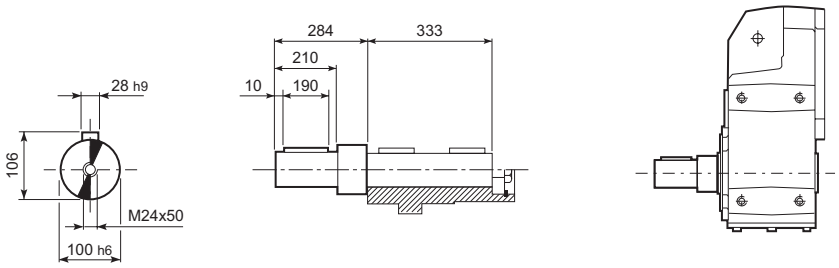

F 90...F...

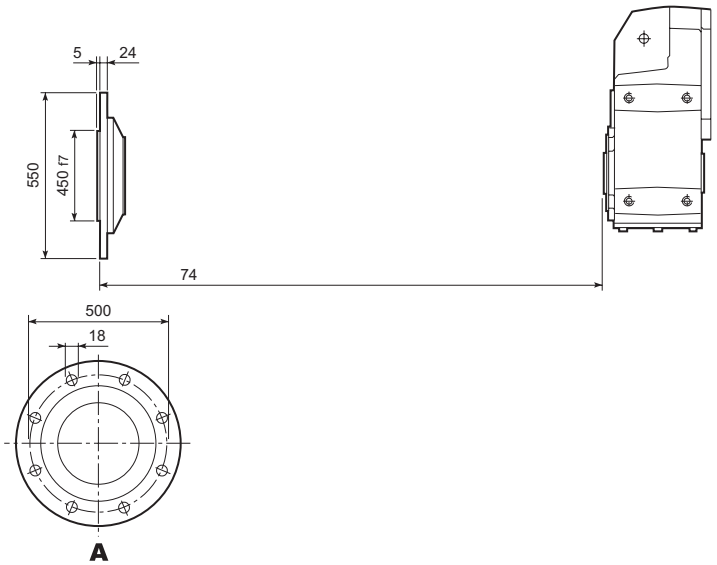

Schwingungsdämpfung

Die Getriebe der Serie F können auf Anfrage mit einem Satz Schwingungsdämpfern gelifert werden. Dieser Satz enthält die für die Aufsteckbefestigung erforderlichen Komponenten (ausgenommen der Drehmomentstütze).
Die Abmessungen sind in der folgenden Tabelle ersichtlich.

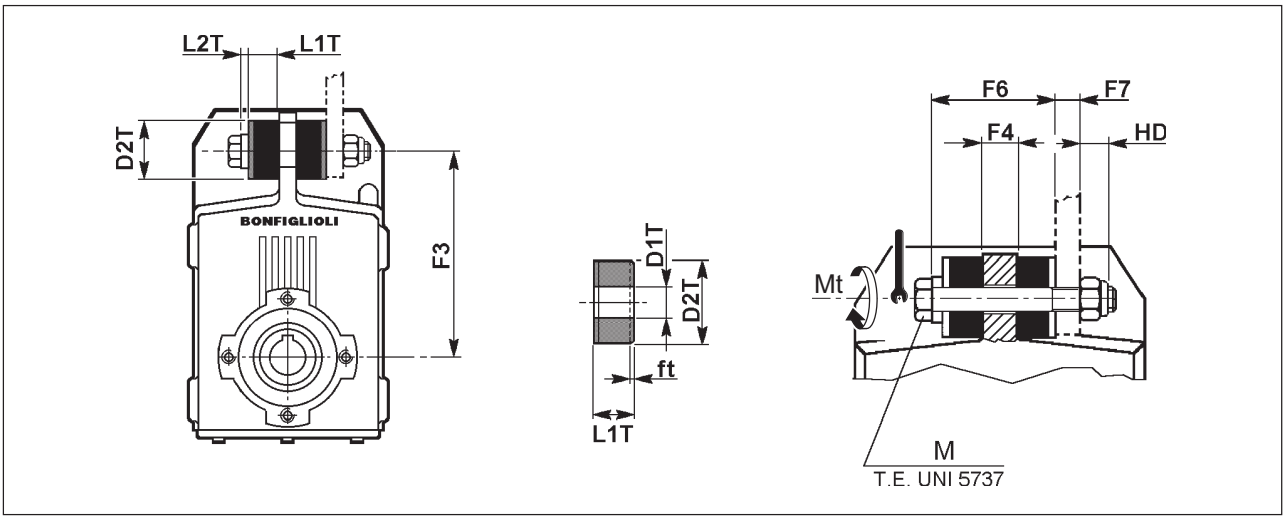

	F3	F4	F6	F7 (max.)	HD	L1T	L2T	D1T	D2T	M	Mt [Nm] []	ft
F 10	140	20	55	10	12.3	15	5	11	30	M10x80	10	1.5
F 20	160	20	55	10	12.3	15	5	11	30	M10x80	10	1.5
F 25	162	20	65	20	14.8	20	5	12.5	40	M12x100	20	1.5
F 31	170	20	65	20	14.8	20	5	12.5	40	M12x100	20	1.5
F 41	218	16	61	24	14.8	20	5	12.5	40	M12x100	20	2.3
F 51	278	20	90	47	23	30	10	21	60	M20x160	50	3.0
F 60	325	26	96	41	23	30	10	21	60	M20x160	50	4.0
F 70	370	30	122	50	28	40	12	25	80	M24x200	100	4.0
F 80	430	36	128	44	28	40	12	25	80	M24x200	100	6.0
F 90	515	40	175	40	33.2	60	15	32	100	M30x260	200	9.0

f_t= Stauchung des Gummipuffers unter Nennlast.

69 MASCHINENACHSE

Die angetriebene und mit dem Getriebe verbundene Welle sollte aus hochwertigem Stahl gemäß den Abmessungen der Tabelle gefertigt werden.

Darüber hinaus sollte die Welle axial gesichert werden, siehe folgendes Beispiel. Hierbei die einzelnen Komponenten in Abhängigkeit der verschiedenen Anwendungserfordernisse überprüfen und dimensionieren.

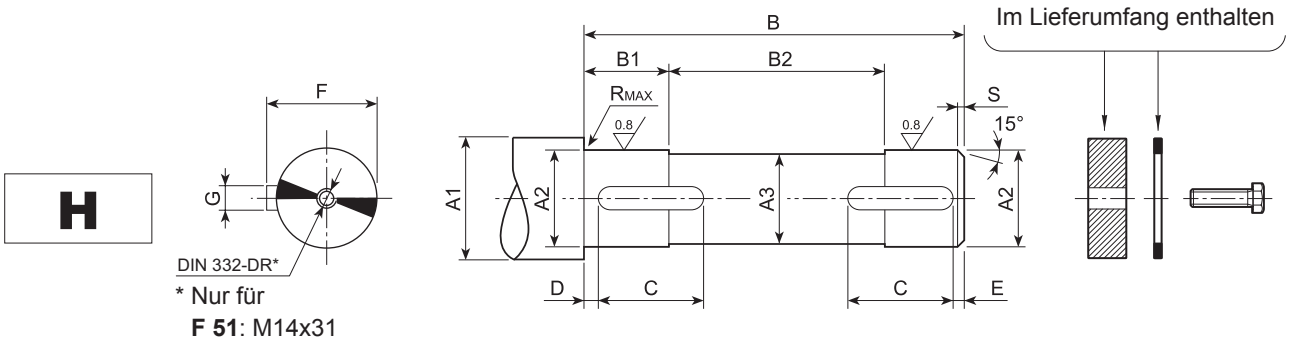

	A1	A2	A3	B	B1	B2	C	D	E	F	G	R	S	UNI 6604	UNI 5739
F 10	≥ 35	30 h7	29	87.5	15.5	56.5	20	2	2	33	8 h9	0.5	1.5	8x7x20 A	M8x25
	≥ 30	25 h7	24	87.5	15.5	56.5	20	2	2	28	8 h9	0.5	1.5	8x7x20 A	
F 20	≥ 42	35 h7	34	99	18	63	22	2	2	38	10 h9	0.5	1.5	10x8x22 A	M8x30
	≥ 35	30 h7	29	99	18	63	22	2	2	33	8 h9	0.5	1.5	8x7x22 A	
F 25	≥ 47	40 h7	39	104	23	58	30	2	2	43	12 h9	0.5	1.5	12x8x30 A	M8x30
	≥ 42	35 h7	34	104	23	58	30	2	2	38	10 h9	0.5	1.5	10x8x30 A	
F 31	≥ 47	40 h7	39	104	28	48	30	2	2	43	12 h9	0.5	1.5	12x8x30 A	M8x30
	≥ 42	35 h7	34	104	28	48	30	2	2	38	10 h9	0.5	1.5	10x8x30 A	
F 41	≥ 52	45 h7	44	118	27.5	63	45	2.5	2.5	49.5	14 h9	1	2.0	14x9x45 A	M10x30
	≥ 47	40 h7	39	118	27.5	63	45	2.5	2.5	43	12 h9	1	2.0	12x8x45 A	
F 51	≥ 63	55 h7	54	139	33	73	50	2.5	2.5	59	16 h9	1	2.0	16x10x50 A	M14x45
	≥ 57	50 h7	49	139	33	73	50	2.5	2.5	53.5	14 h9	1	2.0	14x9x50 A	
F 60	≥ 78	70 h7	69	180	38	104	70	2.5	2.5	74.5	20 h9	1	2.0	20x12x70 A	M16x45
	≥ 68	60 h7	59	180	38	104	70	2.5	2.5	64	18 h9	1	2.0	18x11x70 A	
F 70	≥ 89	80 h7	79	229	58	113	75	3	3	85	22 h9	2.5	2.5	22x14x75 A	M20x55
	≥ 78	70 h7	69	229	58	113	75	3	3	74.5	20 h9	2.5	2.5	20x12x75 A	
F 80	≥ 99	90 h7	89	272	78	116	100	3	3	95	25 h9	2.5	2.5	25x14x100 A	M20x55
	v 89	80 h7	79	272	78	116	100	3	3	85	22 h9	2.5	2.5	22x14x100 A	
F 90	≥ 111	100 h7	99	333	87.5	158	110	3	3	106	28 h9	2.5	2.5	28x16x110 A	M24x65
	≥ 99	90 h7	89	333	87.5	158	110	3	3	95	25 h9	2.5	2.5	25x14x110 A	

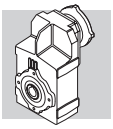

S

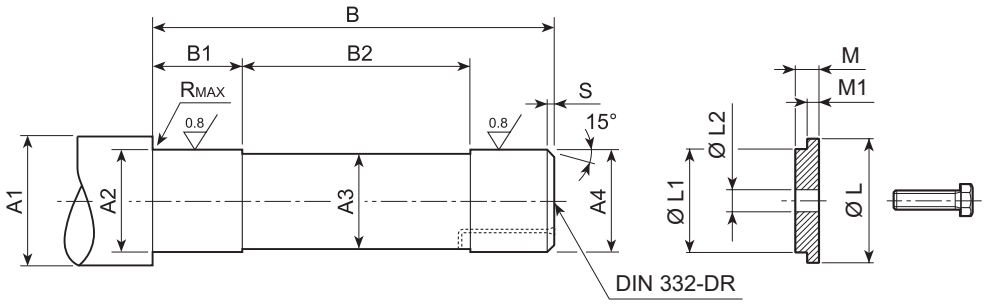

	A1	A2	A3	A4	B	B1	B2	R	S	L	L1	L2	M	M1	UNI 5739
F 10	≥ 36	27 h7	24	25 h6	138	34	70	0.5	1.5	29.5	25 d9	9	7	5.5	M8x25
F 20	≥ 42	32 h7	29	30 h6	160	38	84	0.5	1.5	35.5	30 d9	9	7	5.5	M8x25
F 25	≥ 42	32 h7	30	31 h6	172	38	96	0.5	1.5	35.5	31 d9	9	7	5.5	M8x25
F 31	≥ 50	38 h7	35	36 h6	155	40	73	1	2	43	36 d9	9	7	5.5	M8x25
F 41	≥ 58	44 h7	41	42 h6	177	46.5	82	1	2	49	42 d9	11	8.5	7	M10x30
F 51	≥ 68	54 h7	51	52 g6	201	48	91	1	2	61	52 d9	18	9	7.5	M16x45
F 60	≥ 84	67 h7	64	65 g6	248	53	133	1.5	2	80	65 d9	18	9	7.5	M16x45
F 70	≥ 104	82 h7	79	80 g6	308	78	140	2.5	2.5	95	80 d9	22	13.5	12	M20x55
F 80	≥ 114	92 h7	89	90 g6	365	88	177	2.5	2.5	105	90 d9	22	13.5	12	M20x55
F 90	≥ 126	102 h7	99	100 g6	429.5	98	221.5	2.5	2.5	120	100 d9	26	20	18.5	M24x70

QF

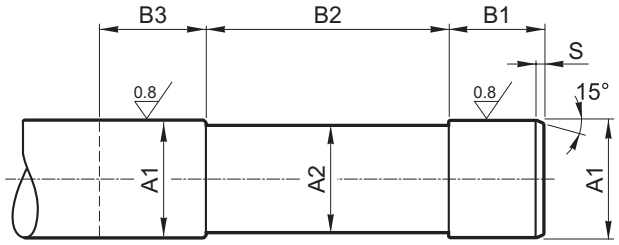

		A1	A2	B1	B2	B3	S
F 10	**QF25**	25 h6	24	41	83	≥ 50	1.5
	QF30	30 h6	29				
F 20	**QF25**	25 h6	24	41	104.5	≥ 50	1.5
	QF30	30 h6	29				
F 25	**QF30**	30 h6	29	41	120.5	≥ 50	1.5
	QF32	32 h6	31				
F 31	**QF35**	35 h6	34	45	95.5	≥ 54	1.5
	QF40	40 h6	39				
F 41	**QF42**	42 h6	41	46	112.5	≥ 55	2
	QF45	45 h6	44				
F 51	**QF50**	50 h6	49	48	131	≥ 57	2
	QF55	55 h6	54				
F 60	**QF60**	60 h6	59	57	158	≥ 66	2.5
	QF65	65 h6	64				
	QF70	70 h6	69				

70 KONSTRUKTIVE EIGENSCHAFTEN

Die wichtigsten konstruktiven Eigenschaften sind:
- Baueinheitensystem
- Kompaktheit
- hohe Wirkungsgrade
- niedriger Geräuschpegel
- einsatzgehärtete und gehärtete Zahnräder aus legiertem Stahl
- Nicht lackierte Aluminiumgehäuse bei den Größen 10, 20 und 30; hochwiderstandsfähige und lackierte Gußgehäuse bei den anderen Größen
- Antriebs- und Abtriebswellen aus hochwiderstandsfähigem Stahl.

(E 59)

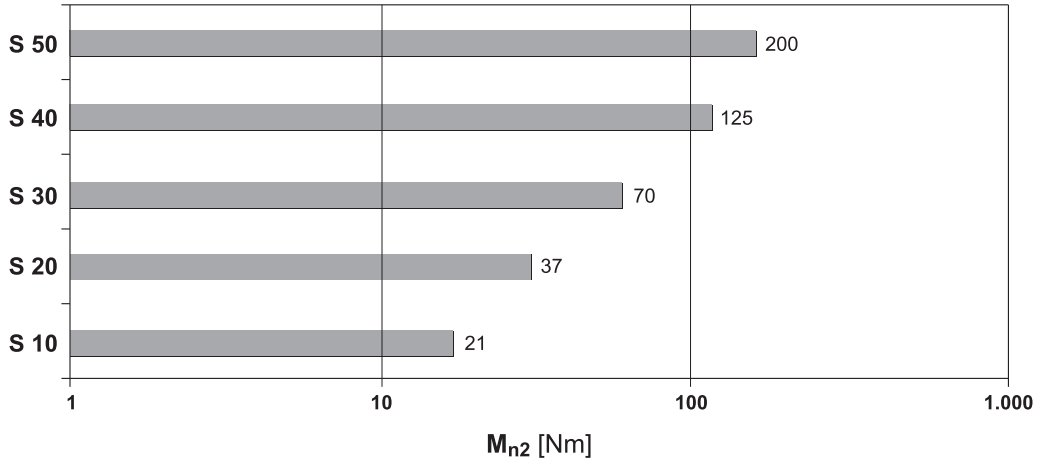

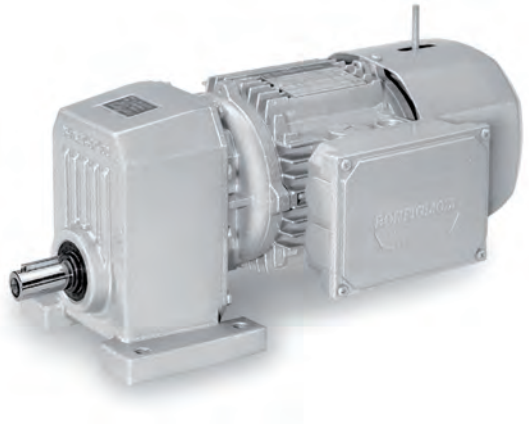

71 BAUFORMEN

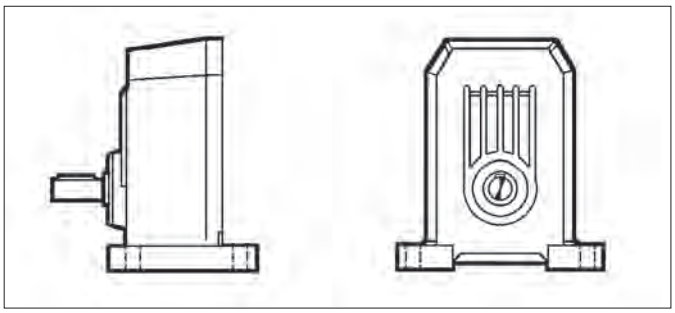

P

Integrierten Füßen

S 10 ... S 50

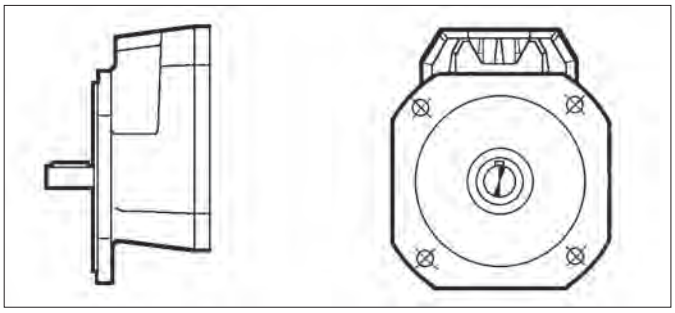

F

Integriertem Flansch

S 10 ... S 50

72 BEZEICHNUNG

GETRIEBE

S 10 1 P 1.4 S1 B3 .....

OPTIONEN

EINBAULAGEN

S...P: **B3** (Standard), **B6**, **B7**, **B8**, **V5**, **V6**
S...F: **B5** (Standard), **B51**, **B52**, **B53**, **V1**, **V3**

BEZEICHNUNG DER ANTRIEBSSEITE

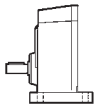

S05	**S3**
S1	**S4**
S2	**S5**

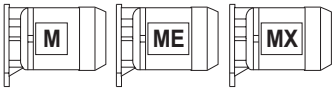

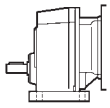

IEC_

P63	**P112**
P71	**P132**
P80	**P160**
P90	**P180**
P100	

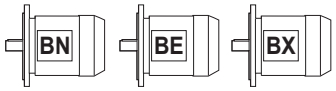

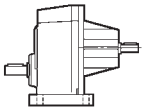

HS

ÜBERSETZUNG

BAUFORM

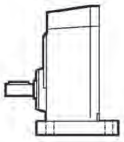

P

F

GETRIEBESTUFEN
1

GETRIEBEBAUGRÖSSE
10, **20**, **30**, **40**, **50**

TYP: **S** = Stirnradgetriebe-Einstufig

MOTOR | BREMSE

1LA 230/400-50 IP54 CLF ..... **W** 7.5 R SB 220 SA .....

OPTIONEN

BREMSVERSOR-
GUNG

GLEICHRICHTERTYP
AC/DC
NB, **SB**, **NBR**, **SBR**

BREMSENTHANDLÜFTUNG
R, **RM**

BREMSMOMENT

BREMSENTYP
FD (G.S. Bremse)
FA (W.S. Bremse)

KLEMMENKASTENLAGE
W (default), **N**, **E**, **S**

BAUFORM
— (kompaktes Motor)
B5 (IEC Motor)

ISOLIERUNGSKLASSE
CL F standard
CL H option

SCHUTZART
IP55 standard (IP54 - Bremssmotor)

SPANNUNG - FREQUENZ

POLZAHL
2, **4**, **6**, **2/4**, **2/6**, **2/8**, **2/12**, **4/6**, **4/8**

MOTOR-BAUGRÖSSE
0B ... 5LA (kompaktes Motor)
63A ... 280M (IEC - motor)

MOTORTYP
MX = Dreiphasen Kompaktmotor, Klasse IE3
BX = Dreiphasen IEC Motor, Klasse IE3
ME = Dreiphasen Kompaktmotor, Klasse IE2
BE = Dreiphasen IEC Motor, Klasse IE2
M = Dreiphasen Kompaktmotor
BN = Dreiphasen IEC Motor

72.1 Getriebe Optionen

SO
Die Getriebetypen S10, S20, S30 und S40, die normalerweise inklusiv Schmiermittel geliefert werden, werden ohne Öl geliefert.

LO
Die Getriebe S50, die gewöhnlich ohne Schmiermittel geliefert werden, werden in Übereinstimmung mit der Einbaulage mit dem standardmäßigen von BONFIGLIOLI RIDUTTORI verwendeten synthetischen Schmierstoff gefüllt.

DV
2 Wellendichtringe auf der eintreibenden Welle. (Nur für Kompaktgetriebemotoren).

VV
Wellendichtringe aus Fluor-Elastomer auf der eintreibenden Welle.

PV
Alle Wellendichtringe aus Fluor-Elastomer.

OBERFLÄCHENSCHUTZ

Wenn keine besondere Korrosionsschutzklasse gefordert ist, ist die lackierte Oberfläche des Getriebes mindestens mit einem Schutz gegen Korrosion der Klasse C2 nach UNI EN ISO 12944-2 geschützt
Für eine bessere Witterungsbeständigkeit können die Getriebe, durch eine Lackierung des ganzen Getriebes, mit einem Oberflächenschutz der Klassen **C3** und **C4** geliefert werden.

(E 60)

OBERFLÄ-CHENSCHUTZ	Typische Umgebungen	Maximale Ober-flächen-temperatu	Korrosionsschutzklasse nach UNI EN ISO 12944-2
C3	Stadt- und Industrieumgebung mit bis zu 100% relativer Luftfeuchtig-keit (mittlere Luftverschmutzung)	120°C	C3
C4	Industrie- und Küstengebiete und Chemieanlagen mit bis zu 100% relativer Luftfeuchtigkeit (hohe Luftverschmutzung)	120°C	C4

Getriebe mit einem optionalen Korrosionsschutz der Klassen **C3** oder **C4** sind in einer Auswahl von Farben verfügbar. Wenn keine spezielle Farbe gefordert ist, (siehe Option „Lackierung“) ist der Decklack in RAL 7042.
Unsere Getriebe können auch mit Oberflächenschutz der Klasse **C5** nach UNI EN ISO 12944-2 versehen werden. Für weitere technische Informationen wenden Sie bitte an unseren Technischen Service.

LACKIERUNG

Getriebe mit Oberflächenschutz der Klasse C3 oder C4, sind in den, in der folgenden Liste aufgelisteten Farben, verfügbar.

(E 61)

LACKIERUNG	Farbe	RAL Nummer
RAL7042*	Traffic Grey A	7042
RAL5010	Gentian Blue	5010
RAL9005	Jet Black	9005
RAL9006	White Aluminium	9006
RAL9010	Pure White	9010

* Die Getriebe werden in dieser Standardfarbe geliefert, wenn keine andere Farbe angegeben ist.

Hinweis – Die Option “Lackierung” kann nur im Zusammenhang mit dem Oberflächenschutz spezifiziert werden.

NACHWEISE

AC - Konformitätsbescheinigung Dokument mit dessen Ausstellung die Konformität des Produkts mit dem Auftrag, und dessen Konstruktion in Konformität mit den vom Qualitätsmanagementsystem von Bonfiglioli Riduttori vorgesehenen Standardfertigungs- und -kontrollverfahren bescheinigt wird.

CC – Prüfzeugnis
Die Bestellung führt zur Durchführung von Kontrollen der Konformität mit dem Auftrag, allgemeinen Sichtkontrollen und instrumentalen Prüfungen der Passmaße. Des Weiteren werden allgemeine Betriebskontrollen bei Leerlauf sowie Prüfungen der Funktionalität der Dichtungen bei Stillstand und während des Betriebs durchgeführt. Die Prüfung wird anhand einer Stichprobe des Versandloses durchgeführt.

72.2 Optionen Motoren

AA, AC, AD
Geben die Lage des Bremslüfterhebels zum Klemmenkasten an. Standard ist 90° im Uhrzeigersinn beim Ansehen der Lüfterradseite. AA = 0°, AC = 180°, AD =90° entgegen dem Uhrzeigersinn.

AL, AR
Für Getriebemotoren mit Kompaktmotor der Baureihe M oder ME steht die Option Rücklaufsperre zur Verfügung, welche direkt am Motor installiert ist und im Abschnitt über die Elektromotoren in diesem Katalog beschrieben wird. Die folgende Tabelle zeigt die freie Drehrichtung des Getriebemotors, anhand welcher die Option entsprechend gewählt werden muss.

(E 62)

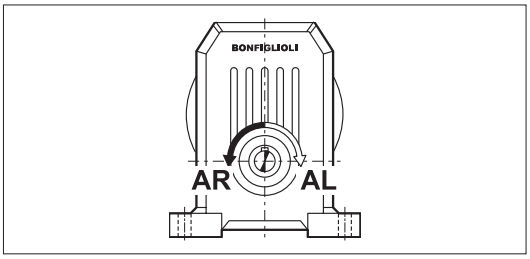

CF
Kapazitive Filter.

D3
3 Bimetallfühler in den Wicklungen mit Temperatur von 150°C.

E3
3 Kaltleiterthermistoren in den Wicklungen mit Temperatur von 150°C.

F1
Schwungrad zum sanften Anfahren.

H1
Wicklungsheizung Standardspannung 1~ 230 V ±10%

H1
Wicklungsheizung Standardspannung 1~ 230 V ±10%

PS
Zweites Wellenende (schließt die Optionen RC und U1 aus).

RC
Schutzdach (schließt Option PS aus).

RV
Läufer in Vibrationsgrad B ausgewuchtet.

TC
Bei dieser Option handelt es sich um ein Schutzdachs mit einem Textilnetz, dessen Einsatz empfohlen wird wenn der Motor in Bereichen der Textilindustrie installiert wird. Diese Option schließt die Möglichkeit der Optionen EN_ .

TP
Tropenfestigkeit.

U1
Fremdbelüftung (Nicht anwendbare zusammen mit den Optionen PS und CUS).

U2
Fremdlüfter ohne Klemmenkasten, bereits intern verkabelt. Nicht anwendbar zusammen mit den Optionen PS und CUS. Verfügbar für folgende Motoren: BN 71, BE 80 ... BE 132, M1, ME2 ... ME4.

Weitere Informationen zu Optionen, finden Sie im Abschnitt “Elektromotoren”.

73 SCHMIERUNG

Die Schmierung der Getriebe von Bonfiglioli erfolgt durch eine Kombination aus Ölbad- und Spritzschmierung.
Die Getriebegrößen S10, S20, S30 und S40 sind ab Werk mit einer Lebensdauerschmierung versehen.
Die Getriebe ab der Größe S50 werden ohne Ölfüllung ausgeliefert. Vor der Inbetriebnahme muss deshalb auf das Einfüllen der richtigen Ölfüllmenge geachtet werden !
In beiden Fällen, abhängig von der Ausführung, ist es notwendig vor der Inbetriebnahme des Getriebes den Verschlußstopfen durch den Entlüftungsstopfen, der mitgeliefert wird, zu ersetzen.
Hinweise zu der Position der Serviceschrauben/Stopfen und Angaben zu den Schmierstoffmengen finden Sie in der Betriebs- und Wartungsanleitung (auf www.bonfiglioli.com verfügbar).
Die mit Lebensdauerschmierung gelieferten Größen sind mit synthetischem Öl auf Polyglykolbasis gefüllt. Falls dieses Öl nicht verunreinigt wird, ist während der Lebensdauer des Getriebes kein Ölwechsel nötig.
Die Getriebe dürfen bei einer Umgebungstemperatur von -20°C bis +40°C betrieben werden.
Allerdings darf ein Start unter Last bei -20°C bis -10°C erst nach stufenweiser und gleichmäßiger Vorwärmung erfolgen. Anderfalls muss das Anfahren ohne Last erfolgen.
Die Last darf erst zugeschaltet werden, wenn die Getriebeeinheit eine Temperatur von mindestens -10° oder höher erreicht hat.

74 EINBAULAGEN UND LAGE DES KLEMMENKASTENS

Die Angaben zur Lage des Klemmenkastens beziehen sich auf das von der Lüfterseite her betrachtete Getriebe. Die Standardorientierung ist schwarz hervorgehoben (W).

Winkellage des Handlüfterhebels.
Bei Bremsmotoren wird der Handlüfterhebel (auf Anfrage) standardmäßig auf 90° gegenüber des Klemmkastens (AB-Anordnung) geliefert; wird eine andere Anordnung verlangt, muß dies bei der Bestellung durch die geeignete Option angegeben werden.

(E 63)

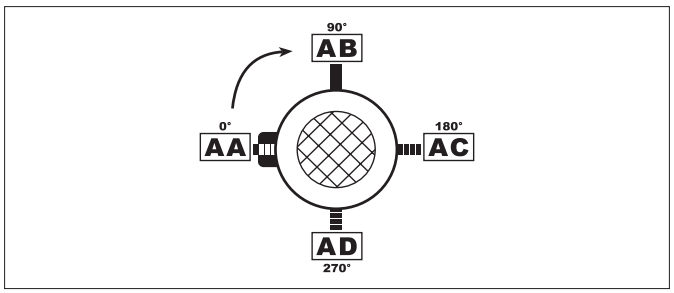

S ... P

B3

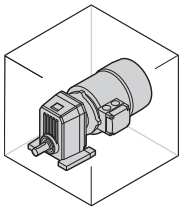
_S

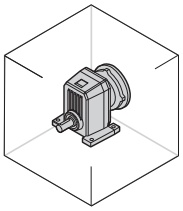
_P(IEC)

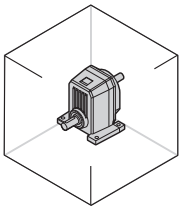
_HS

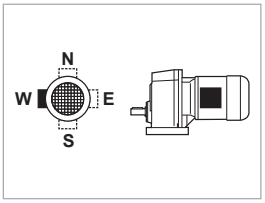

B6

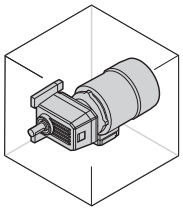
_S

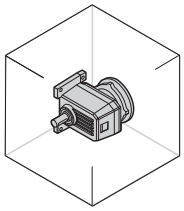
_P(IEC)

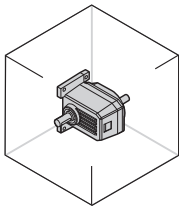
_HS

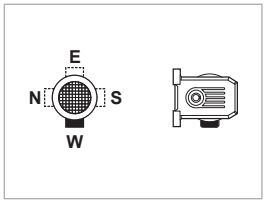

B7

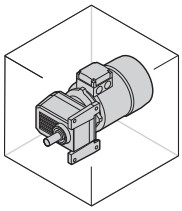
_S

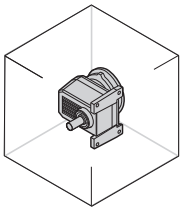
_P(IEC)

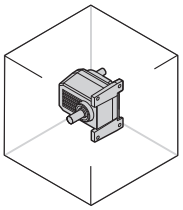
_HS

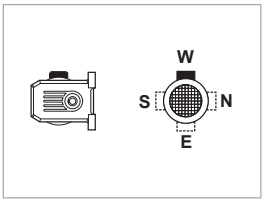

B8

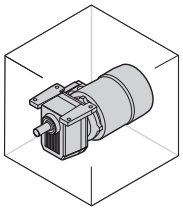
_S

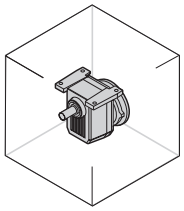
_P(IEC)

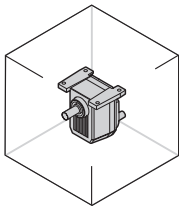
_HS

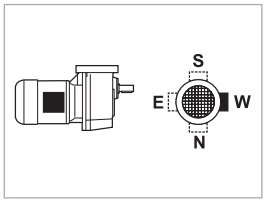

V5

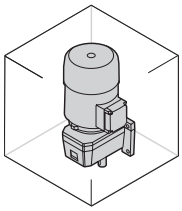
_S

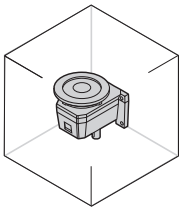
_P(IEC)

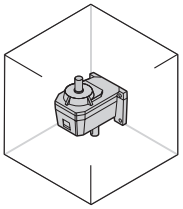
_HS

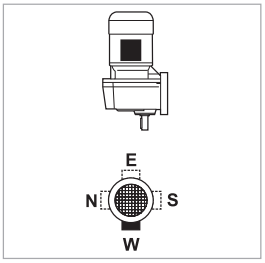

V6

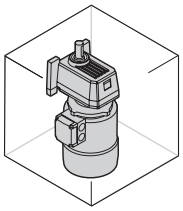
_S

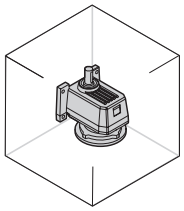
_P(IEC)

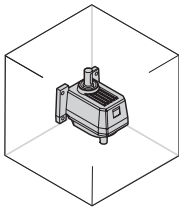
_HS

W = Default

S ... F

B5

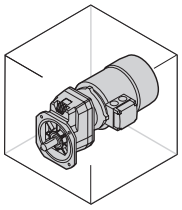

_S

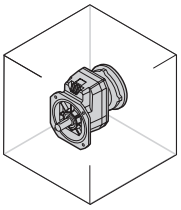

_P(IEC)

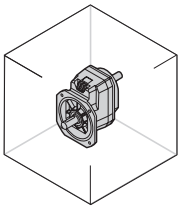

_HS

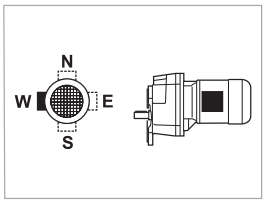

B51

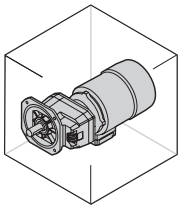

_S

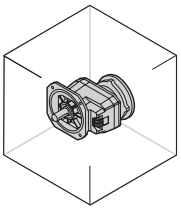

_P(IEC)

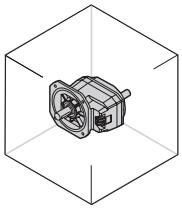

_HS

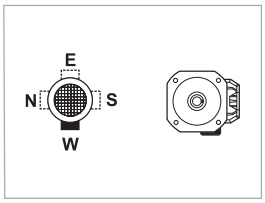

B53

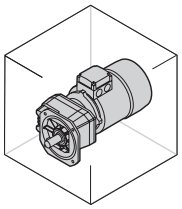

_S

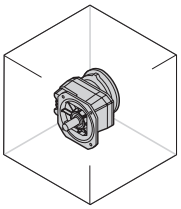

_P(IEC)

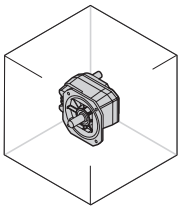

_HS

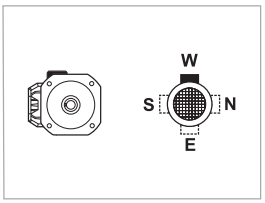

B52

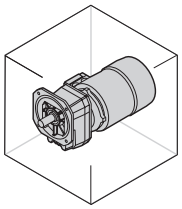

_S

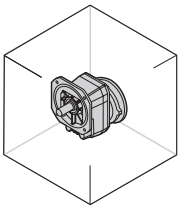

_P(IEC)

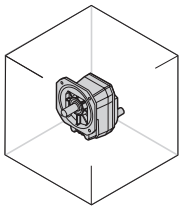

_HS

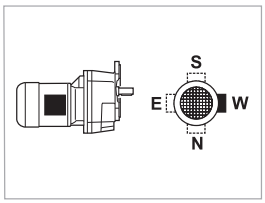

V1

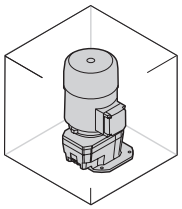

_S

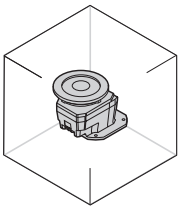

_P(IEC)

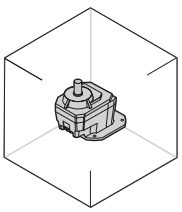

_HS

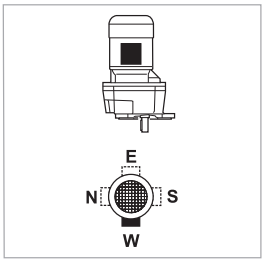

V3

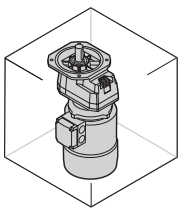

_S

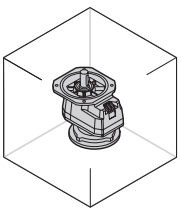

_P(IEC)

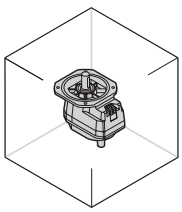

_HS

W = Default

75 RADIALKRÄFTE

Die mit den Antriebs- und/oder Abtriebswellen des Getriebes verbundenen Antriebsorgane bilden Kräfte, die in radiale Richtung auf die Welle selbst wirken.
Das Ausmaß dieser Kräfte muß mit der Festigkeit des Systems aus Getriebewelle/-lager kompatibel sein, insbesondere muß der absolute Wert der auftretenden Belastung (R_{c1} für Antriebswelle und R_{c2} für Abtriebswelle) unter dem in den Tabellen der Technischen Daten angegebenen Nennwert (R_{n1} für Antriebswelle und R_{n2} für Abtriebswelle) liegen.
In den nachstehenden Formeln bezieht sich die Angabe (1) auf die Maße der Antriebswelle, die Angabe (2) auf die Abtriebswelle.
Die von einem externen Antrieb erzeugte Kraft kann, recht genau, anhand der nachstehenden Formel berechnet werden:

$$R_{c1}[N] = \frac{2000 \cdot M_1[Nm] \cdot K_r}{d\,[mm]} \quad ; \quad R_{c2}[N] = \frac{2000 \cdot M_2[Nm] \cdot K_r}{d\,[mm]} \qquad (44)$$

(E 64)

M_1 [Nm]	Drehmoment auf die Antriebswelle
M_2 [Nm]	Drehmoment auf die Abtriebswelle
d [mm]	Teilkreisdurchmesser von Bewegungselement, der auf der Abtriebswelle aufgeschrumpft ist
K_r = 1	Kettenantrieb

K_r = 1,25	Zahnradantrieb
K_r = 1,5	Antrieb über Keilriemen
K_r = 2,0	Antrieb über Flachriemen

In Abhängigkeit zum Kraftanangriffspunkt an der Welle erfolgt die Kontrolle hinsichtlich der Kompatibilität in unterschiedlicher Weise und insbesondere:

(E 65)

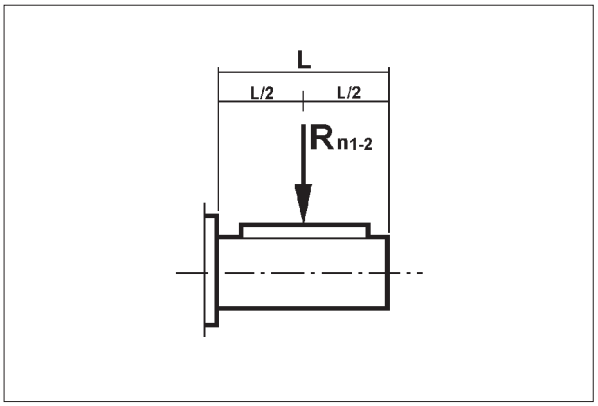

(E 66)

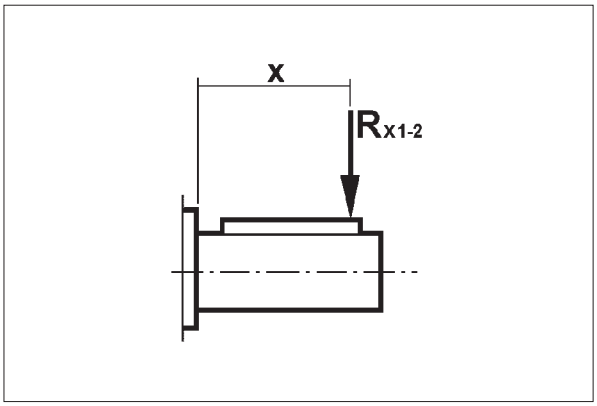

a) Kraftangriffspunkt in der Mitte, Tab. (E65)

Der zuvor errechnete Wert muß mit dem im Katalog angegebenen Nennwert verglichen werden. Es muß sich folgendes ergeben:

$R_{c1} \leq R_{n1}$ [Antriebswelle]

oder

$R_{c2} \leq R_{n2}$ [Abtriebswelle]

b) Von der Mitte versetzter Kraftangriffspunkt Tab. (E66)

Der auf einer Distanz “x” vom Wellenansatz liegende Kraftangriffspunkt erfordert eine erneute Berechnung des für diesen Abstand zulässigen Werts.
Der neue Wert wird mit den Symbolen R_{x1} (Antrieb) und R_{x2} (Abtrieb) gekennzeichnet und unter Anwendung der nachstehenden Faktorenberechnung aus den Katalog- werten R_{n1} und R_{n2}:

$$\frac{a}{b+x} \qquad (45)$$

(E 67)

	Getriebekonstanten					
	Abtriebswelle			Antriebswelle		
	a	**b**	**c**	**a**	**b**	**c**
S 10 1	61	46	200	21	1	300
S 20 1	73.5	53.5	270	40	20	350
S 30 1	91.5	66.5	380	38.5	18.5	350
S 40 1	126.5	96.5	600	49.5	24.5	450
S 50 1	153.5	113.5	680	49.5	24.5	450

Das Kontrollverfahren zieht die nachstehend beschriebenen Schritte nach sich.

ANTRIESBWELLE

1. Berechnung von:

$$R_{x1} = R_{n1} \cdot \frac{a}{b+x} \qquad (46)$$

HINWEIS unter der Bedingung, daß:

$$\frac{L}{2} \leq x \leq c \qquad (47)$$

Dies als Voraussetzung, muß sich folgendes ergeben:

$$R_{c1} \leq R_{x1} \tag{48}$$

ABTRIEBSWELLE

1. Berechnung von:

$$R_{x2} = R_{n2} \cdot \frac{a}{b + x} \tag{49}$$

HINWEIS unter der Bedingung, daß:

$$\frac{L}{2} \leq x \leq c \tag{50}$$

Dies als Voraussetzung, muß sich folgendes ergeben:

$$R_{c2} \leq R_{x2} \tag{51}$$

76 AXIALKRÄFTE, A_{n1}, A_{n2}

Die Werte der zulässigen, auf die Antriebswelle [A_{n1}] und auf die Abtriebswelle [A_{n2}] einwirkenden Axialkräfte können unter Bezugnahme auf den jeweiligen Wert der Radialkraft [R_{n1}] und [R_{n2}] anhand der nachstehenden Angaben berechnet werden:

$$\begin{aligned} A_{n1} &= R_{n1} \cdot 0.2 \\ A_{n2} &= R_{n2} \cdot 0.2 \end{aligned} \tag{52}$$

Die so errechneten Werte der zulässigen Axialkräfte beziehen sich auf den Fall, in dem die Axialkräfte gleichzeitig mit den Nennradialkräften auftreten.
Nur im Fall, dass keine Radialbelastung auf die Getriebewelle wirkt, ist der Wert der zulässigen Axialbelastung [A_n] gleich 50% der zulässigen Radialbelastung [R_n] bezogen auf die gleiche Welle.
Bei sehr hohen Axialkräften oder stark erhöhten Radialkräften, wird im Hinblick auf eine genaue Kontrolle empfohlen, sich mit dem Technischen Kundendienst der Bonfiglioli Riduttori in Verbindung zu setzen.

Die Auswahl der Motoren ohne Bremse erfolgt nach den Vorgaben der Verordnung EG 640/2009 (siehe abschnitt **M** dieses Katalogs). Für Nennleistungen unter 0,75 kW können die BN/M-Motoren vorgesehen werden.
Die Verordnung EG 640/2009 gilt nicht für die Bremsmotoren, d.h., bei der Auswahl der Bremsmotoren sind die BN/M-Motoren in Betracht zu ziehen, ohne den Wert der Nennleistung zu berücksichtigen. Die BX, BE, MX und ME-Bremsmotoren sind auf Anfrage verfügbar.

0.09 kW

n_2 min-1	M_2 Nm	S	i	R_{n2} N	IE1		IEC IE1	
69	12.1	2.9	13.1	2400			**S301_13.1 P63 BN63A6**	491
73	11.5	1.7	12.4	1500	**S201_12.4 S05 M05A6**	488	**S201_12.4 P63 BN63A6**	489
74	11.4	1.1	12.3	1160	**S101_12.3 S05 M05A6**	486	**S101_12.3 P63 BN63A6**	487
85	10.0	2.0	10.8	1500	**S201_10.8 S05 M05A6**	488	**S201_10.8 P63 BN63A6**	489
88	9.5	1.3	10.3	1100	**S101_10.3 S05 M05A6**	486	**S101_10.3 P63 BN63A6**	487
103	8.2	1.5	8.9	1060	**S101_8.9 S05 M05A6**	486	**S101_8.9 P63 BN63A6**	487
107	7.9	2.5	8.5	1500	**S201_8.5 S05 M05A6**	488	**S201_8.5 P63 BN63A6**	489
132	6.4	2.7	6.9	990	**S101_6.9 S05 M05A6**	486	**S101_6.9 P63 BN63A6**	487
149	5.7	3.0	6.1	960	**S101_6.1 S05 M05A6**	486	**S101_6.1 P63 BN63A6**	487
193	4.4	3.2	4.7	890	**S101_4.7 S05 M05A6**	486	**S101_4.7 P63 BN63A6**	487
237	3.6	3.9	3.8	830	**S101_3.8 S05 M05A6**	486	**S101_3.8 P63 BN63A6**	487
284	3.0	4.7	3.2	790	**S101_3.2 S05 M05A6**	486	**S101_3.2 P63 BN63A6**	487
364	2.3	5.2	2.5	730	**S101_2.5 S05 M05A6**	486	**S101_2.5 P63 BN63A6**	487
485	1.7	6.9	1.9	670	**S101_1.9 S05 M05A6**	486	**S101_1.9 P63 BN63A6**	487
640	1.3	9.1	1.4	610	**S101_1.4 S05 M05A6**	486	**S101_1.4 P63 BN63A6**	487

0.12 kW

n_2 min-1	M_2 Nm	S	i	R_{n2} N	IE1		IEC IE1	
69	16.2	2.2	13.1	2400			**S301_13.1 P63 BN63A4**	491
73	15.3	1.3	12.4	1500	**S201_12.4 S05 M05B6**	488	**S201_12.4 P63 BN63B6**	489
85	13.3	1.5	10.8	1500	**S201_10.8 S05 M05B6**	488	**S201_10.8 P63 BN63B6**	489
88	12.7	2.8	10.3	2400			**S301_10.3 P63 BN63B6**	491
88	12.7	0.9	10.3	1060	**S101_10.3 S05 M05B6**	486	**S101_10.3 P63 BN63B6**	487
102	11.0	3.2	8.9	2400			**S301_8.9 P63 BN63B6**	491
103	11.0	1.1	8.9	1030	**S101_8.9 S05 M05B6**	486	**S101_8.9 P63 BN63B6**	487
107	10.5	2.8	13.1	2400			**S301_13.1 P63 BN63B6**	491
107	10.5	1.9	8.5	1500	**S201_8.5 S05 M05B6**	488	**S201_8.5 P63 BN63B6**	489
113	10.0	1.7	12.4	1500	**S201_12.4 S05 M05A4**	488	**S201_12.4 P63 BN63A4**	489
114	9.9	1.0	12.3	1000	**S101_12.3 S05 M05A4**	486	**S101_12.3 P63 BN63A4**	487
126	8.9	3.4	7.2	1500	**S201_7.2 S05 M05B6**	488	**S201_7.2 P63 BN63B6**	489
130	8.6	2.0	10.8	1500	**S201_10.8 S05 M05A4**	488	**S201_10.8 P63 BN63A4**	489
132	8.5	2.0	6.9	960	**S101_6.9 S05 M05B6**	486	**S101_6.9 P63 BN63B6**	487
136	8.3	1.2	10.3	960	**S101_10.3 S05 M05A4**	486	**S101_10.3 P63 BN63A4**	487
149	7.5	2.3	6.1	940	**S101_6.1 S05 M05B6**	486	**S101_6.1 P63 BN63B6**	487

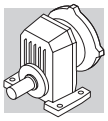

0.12 kW

n_2 min-1	M_2 Nm	S	i	R_{n2} N	IE1		IEC IE1	
158	7.1	1.4	8.9	920	**S101_8.9 S05 M05A4**	486	**S101_8.9 P63 BN63A4**	487
165	6.8	2.5	8.5	1500	**S201_8.5 S05 M05A4**	488	**S201_8.5 P63 BN63A4**	489
193	5.8	2.4	4.7	870	**S101_4.7 S05 M05B6**	486	**S101_4.7 P63 BN63B6**	487
203	5.5	2.7	6.9	860	**S101_6.9 S05 M05A4**	486	**S101_6.9 P63 BN63A4**	487
229	4.9	3.1	6.1	830	**S101_6.1 S05 M05A4**	486	**S101_6.1 P63 BN63A4**	487
237	4.7	2.9	3.8	820	**S101_3.8 S05 M05B6**	486	**S101_3.8 P63 BN63B6**	487
284	3.9	3.5	3.2	780	**S101_3.2 S05 M05B6**	486	**S101_3.2 P63 BN63B6**	487
296	3.8	3.2	4.7	770	**S101_4.7 S05 M05A4**	486	**S101_4.7 P63 BN63A4**	487
364	3.1	3.9	3.8	720	**S101_3.8 S05 M05A4**	486	**S101_3.8 P63 BN63A4**	487
364	3.1	3.9	2.5	720	**S101_2.5 S05 M05B6**	486	**S101_2.5 P63 BN63B6**	487
438	2.6	4.7	3.2	680	**S101_3.2 S05 M05A4**	486	**S101_3.2 P63 BN63A4**	487
485	2.3	5.2	1.9	660	**S101_1.9 S05 M05B6**	486	**S101_1.9 P63 BN63B6**	487
560	2.0	5.0	2.5	630	**S101_2.5 S05 M05A4**	486	**S101_2.5 P63 BN63A4**	487
640	1.8	6.8	1.4	600	**S101_1.4 S05 M05B6**	486	**S101_1.4 P63 BN63B6**	487
747	1.5	6.6	1.9	580	**S101_1.9 S05 M05A4**	486	**S101_1.9 P63 BN63A4**	487
985	1.1	8.8	1.4	530	**S101_1.4 S05 M05A4**	486	**S101_1.4 P63 BN63A4**	487

0.18 kW

n_2 min-1	M_2 Nm	S	i	R_{n2} N	IE1		IEC IE1	
69	24.6	1.4	13.1	2400			**S301_13.1 P71 BN71A6**	491
73	23.2	2.5	12.4	3800	**S401_12.4 S1 M1SC6**	492	**S401_12.4 P71 BN71A6**	493
84	20.1	1.0	10.8	1500			**S201_10.8 P71 BN71A6**	489
84	20.0	2.9	10.7	3800	**S401_10.7 S1 M1SC6**	492	**S401_10.7 P71 BN71A6**	493
87	19.3	1.8	10.3	2400	**S301_10.3 S1 M1SC6**	490	**S301_10.3 P71 BN71A6**	491
101	16.6	2.1	8.9	2400	**S301_8.9 S1 M1SC6**	490	**S301_8.9 P71 BN71A6**	491
106	15.9	1.3	8.5	1500	**S201_8.5 S1 M1SC6**	488	**S201_8.5 P71 BN71A6**	489
106	15.9	1.9	13.1	2400			**S301_13.1 P63 BN63B4**	491
112	15.1	1.1	12.4	1500	**S201_12.4 S05 M05B4**	488	**S201_12.4 P63 BN63B4**	489
112	15.0	3.3	12.4	3800			**S401_12.4 P63 BN63B4**	493
125	13.5	2.2	7.2	1500	**S201_7.2 S1 M1SC6**	488	**S201_7.2 P71 BN71A6**	489
129	13.0	1.3	10.8	1500	**S201_10.8 S05 M05B4**	488	**S201_10.8 P63 BN63B4**	489
130	12.9	1.3	6.9	910	**S101_6.9 S1 M1SC6**	486	**S101_6.9 P71 BN71A6**	487
135	12.5	2.4	10.3	2330			**S301_10.3 P63 BN63B4**	491
147	11.4	1.5	6.1	890	**S101_6.1 S1 M1SC6**	486	**S101_6.1 P71 BN71A6**	487
155	10.9	2.8	5.8	1500	**S201_5.8 S1 M1SC6**	488	**S201_5.8 P71 BN71A6**	489
156	10.8	2.8	8.9	2230			**S301_8.9 P63 BN63B4**	491
157	10.8	0.9	8.9	880	**S101_8.9 S05 M05B4**	486	**S101_8.9 P63 BN63B4**	487
164	10.3	1.7	8.5	1500	**S201_8.5 S05 M05B4**	488	**S201_8.5 P63 BN63B4**	489
189	8.9	3.4	4.8	1500	**S201_4.8 S1 M1SC6**	488	**S201_4.8 P71 BN71A6**	489
190	8.8	1.6	4.7	830	**S101_4.7 S1 M1SC6**	486	**S101_4.7 P71 BN71A6**	487
192	8.8	3.0	7.2	1500	**S201_7.2 S05 M05B4**	488	**S201_7.2 P63 BN63B4**	489
201	8.4	1.8	6.9	820	**S101_6.9 S05 M05B4**	486	**S101_6.9 P63 BN63B4**	487
214	7.9	3.1	13.1	2020			**S301_13.1 P63 BN63A2**	491
226	7.5	1.7	12.4	1480	**S201_12.4 S05 M05A2**	488	**S201_12.4 P63 BN63A2**	489
227	7.4	2.0	6.1	800	**S101_6.1 S05 M05B4**	486	**S101_6.1 P63 BN63B4**	487
228	7.4	1.1	12.3	800	**S101_12.3 S05 M05A2**	486	**S101_12.3 P63 BN63A2**	487
234	7.2	1.9	3.8	790	**S101_3.8 S1 M1SC6**	486	**S101_3.8 P71 BN71A6**	487
261	6.4	2.0	10.8	1420	**S201_10.8 S05 M05A2**	488	**S201_10.8 P63 BN63A2**	489
273	6.2	1.3	10.3	760	**S101_10.3 S05 M05A2**	486	**S101_10.3 P63 BN63A2**	487
281	6.0	2.3	3.2	750	**S101_3.2 S1 M1SC6**	486	**S101_3.2 P71 BN71A6**	487
294	5.7	2.1	4.7	750	**S101_4.7 S05 M05B4**	486	**S101_4.7 P63 BN63B4**	487
317	5.3	1.5	8.9	730	**S101_8.9 S05 M05A2**	486	**S101_8.9 P63 BN63A2**	487

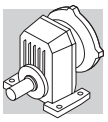

0.18 kW

n_2 min-1	M_2 Nm	S	i	R_{n2} N	IE1		IEC IE1	
331	5.1	2.6	8.5	1320	**S201_8.5 S05 M05A2**	488	**S201_8.5 P63 BN63A2**	489
360	4.7	2.6	2.5	700	**S101_2.5 S1 M1SC6**	486	**S101_2.5 P71 BN71A6**	487
361	4.7	2.6	3.8	700	**S101_3.8 S05 M05B4**	486	**S101_3.8 P63 BN63B4**	487
407	4.1	2.9	6.9	680	**S101_6.9 S05 M05A2**	486	**S101_6.9 P63 BN63A2**	487
434	3.9	3.1	3.2	670	**S101_3.2 S05 M05B4**	486	**S101_3.2 P63 BN63B4**	487
460	3.7	3.3	6.1	660	**S101_6.1 S05 M05A2**	486		
480	3.5	3.4	1.9	640	**S101_1.9 S1 M1SC6**	486	**S101_1.9 P71 BN71A6**	487
556	3.0	3.3	2.5	620	**S101_2.5 S05 M05B4**	486	**S101_2.5 P63 BN63B4**	487
594	2.8	3.5	4.7	610	**S101_4.7 S05 M05A2**	486	**S101_4.7 P63 BN63A2**	487
633	2.7	4.5	1.4	590	**S101_1.4 S1 M1SC6**	486	**S101_1.4 P71 BN71A6**	487
731	2.3	4.3	3.8	570	**S101_3.8 S05 M05A2**	486	**S101_3.8 P63 BN63A2**	487
741	2.3	4.4	1.9	570	**S101_1.9 S05 M05B4**	486	**S101_1.9 P63 BN63B4**	487
878	1.9	5.2	3.2	540	**S101_3.2 S05 M05A2**	486	**S101_3.2 P63 BN63A2**	487
978	1.7	5.8	1.4	520	**S101_1.4 S05 M05B4**	486	**S101_1.4 P63 BN63B4**	487
1124	1.5	5.3	2.5	500	**S101_2.5 S05 M05A2**	486	**S101_2.5 P63 BN63A2**	487
1499	1.1	7.1	1.9	460	**S101_1.9 S05 M05A2**	486	**S101_1.9 P63 BN63A2**	487
1977	0.9	9.4	1.4	420	**S101_1.4 S05 M05A2**	486	**S101_1.4 P63 BN63A2**	487

0.25 kW

n_2 min-1	M_2 Nm	S	i	R_{n2} N	IE1		IEC IE1	
69	34.1	1.0	13.1	2400			**S301_13.1 P71 BN71B6**	491
70	33.5	3.0	12.9	6520	**S501_12.9 S1 M1SD6**	494	**S501_12.9 P71 BN71B6**	495
73	32.2	1.8	12.4	3800	**S401_12.4 S1 M1SD6**	492	**S401_12.4 P71 BN71B6**	493
84	27.7	2.1	10.7	3800	**S401_10.7 S1 M1SD6**	492	**S401_10.7 P71 BN71B6**	493
87	26.8	1.3	10.3	2400	**S301_10.3 S1 M1SD6**	490	**S301_10.3 P71 BN71B6**	491
101	23.1	1.5	8.9	2400	**S301_8.9 S1 M1SD6**	490	**S301_8.9 P71 BN71B6**	491
104	22.5	3.1	8.6	3800	**S401_8.6 S1 M1SD6**	492	**S401_8.6 P71 BN71B6**	493
105	22.3	1.3	13.1	2400			**S301_13.1 P71 BN71A4**	491
106	22.1	0.9	8.5	1500	**S201_8.5 S1 M1SD6**	488	**S201_8.5 P71 BN71B6**	489
111	21.1	2.4	12.4	3800			**S401_12.4 P71 BN71A4**	493
125	18.8	1.6	7.2	1500	**S201_7.2 S1 M1SD6**	488	**S201_7.2 P71 BN71B6**	489
127	18.4	3.1	7.1	2340	**S301_7.1 S1 M1SD6**	490	**S301_7.1 P71 BN71B6**	491
128	18.3	0.9	10.8	1500	**S201_10.8 S05 M05C4**	488	**S201_10.8 P71 BN71A4**	489
129	18.2	2.8	10.7	3800			**S401_10.7 P71 BN71A4**	493
130	17.9	0.9	6.9	850	**S101_6.9 S1 M1SD6**	486	**S101_6.9 P71 BN71B6**	487
133	17.5	1.7	10.3	2300			**S301_10.3 P71 BN71A4**	491
147	15.9	1.1	6.1	840	**S101_6.1 S1 M1SD6**	486	**S101_6.1 P71 BN71B6**	487
155	15.1	2.0	5.8	1500	**S201_5.8 S1 M1SD6**	488	**S201_5.8 P71 BN71B6**	489
155	15.1	2.0	8.9	2200			**S301_8.9 P71 BN71A4**	491
162	14.5	1.2	8.5	1500	**S201_8.5 S05 M05C4**	488	**S201_8.5 P71 BN71A4**	489
189	12.4	2.4	4.8	1500	**S201_4.8 S1 M1SD6**	488	**S201_4.8 P71 BN71B6**	489
190	12.3	1.1	4.7	790	**S101_4.7 S1 M1SD6**	486	**S101_4.7 P71 BN71B6**	487
190	12.3	2.1	7.2	1500	**S201_7.2 S05 M05C4**	488	**S201_7.2 P71 BN71A4**	489
199	11.7	1.3	6.9	780	**S101_6.9 S05 M05C4**	486	**S101_6.9 P71 BN71A4**	487
214	10.9	2.2	13.1	2000			**S301_13.1 P63 BN63B2**	491
225	10.4	1.4	6.1	770	**S101_6.1 S05 M05C4**	486	**S101_6.1 P71 BN71A4**	487
226	10.3	1.3	12.4	1450	**S201_12.4 S05 M05B2**	488	**S201_12.4 P63 BN63B2**	489
229	10.2	2.9	3.9	1440	**S201_3.9 S1 M1SD6**	488	**S201_3.9 P71 BN71B6**	489
234	10.0	1.4	3.8	750	**S101_3.8 S1 M1SD6**	486	**S101_3.8 P71 BN71B6**	487
236	9.9	2.6	5.8	1430	**S201_5.8 S05 M05C4**	488	**S201_5.8 P71 BN71A4**	489
261	9.0	1.5	10.8	1390	**S201_10.8 S05 M05B2**	488	**S201_10.8 P63 BN63B2**	489
273	8.6	2.8	10.3	1860			**S301_10.3 P63 BN63B2**	491

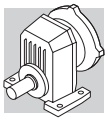

0.25 kW

n_2 min-1	M_2 Nm	S	i	R_{n2} N	IE1		IEC IE1	
273	8.6	0.9	10.3	730	**S101_10.3 S05 M05B2**	486	**S101_10.3 P63 BN63B2**	487
281	8.3	1.7	3.2	720	**S101_3.2 S1 M1SD6**	486	**S101_3.2 P71 BN71B6**	487
288	8.1	3.2	4.8	1350	**S201_4.8 S05 M05C4**	488	**S201_4.8 P71 BN71A4**	489
291	8.0	1.5	4.7	720	**S101_4.7 S05 M05C4**	486	**S101_4.7 P71 BN71A4**	487
316	7.4	3.2	8.9	1770			**S301_8.9 P63 BN63B2**	491
317	7.4	1.1	8.9	710	**S101_8.9 S05 M05B2**	486	**S101_8.9 P63 BN63B2**	487
331	7.1	1.8	8.5	1300	**S201_8.5 S05 M05B2**	488	**S201_8.5 P63 BN63B2**	489
358	6.5	1.8	3.8	680	**S101_3.8 S05 M05C4**	486	**S101_3.8 P71 BN71A4**	487
360	6.5	1.8	2.5	680	**S101_2.5 S1 M1SD6**	486	**S101_2.5 P71 BN71B6**	487
389	6.0	3.5	7.2	1240	**S201_7.2 S05 M05B2**	488	**S201_7.2 P63 BN63B2**	489
407	5.7	2.1	6.9	660	**S101_6.9 S05 M05B2**	486	**S101_6.9 P63 BN63B2**	487
430	5.4	2.2	3.2	650	**S101_3.2 S05 M05C4**	486	**S101_3.2 P71 BN71A4**	487
460	5.1	2.4	6.1	640	**S101_6.1 S05 M05B2**	486	**S101_6.1 P63 BN63B2**	487
480	4.9	2.5	1.9	620	**S101_1.9 S1 M1SD6**	486	**S101_1.9 P71 BN71B6**	487
550	4.3	2.4	2.5	610	**S101_2.5 S05 M05C4**	486	**S101_2.5 P71 BN71A4**	487
594	3.9	2.5	4.7	600	**S101_4.7 S05 M05B2**	486	**S101_4.7 P63 BN63B2**	487
633	3.7	3.2	1.4	580	**S101_1.4 S1 M1SD6**	486	**S101_1.4 P71 BN71B6**	487
731	3.2	3.1	3.8	560	**S101_3.8 S05 M05B2**	486	**S101_3.8 P63 BN63B2**	487
733	3.2	3.1	1.9	560	**S101_1.9 S05 M05C4**	486	**S101_1.9 P71 BN71A4**	487
878	2.7	3.8	3.2	530	**S101_3.2 S05 M05B2**	486	**S101_3.2 P63 BN63B2**	487
968	2.4	4.1	1.4	510	**S101_1.4 S05 M05C4**	486	**S101_1.4 P71 BN71A4**	487
1124	2.1	3.8	2.5	500	**S101_2.5 S05 M05B2**	486	**S101_2.5 P63 BN63B2**	487
1499	1.6	5.1	1.9	450	**S101_1.9 S05 M05B2**	486	**S101_1.9 P63 BN63B2**	487
1977	1.2	6.8	1.4	420	**S101_1.4 S05 M05B2**	486	**S101_1.4 P63 BN63B2**	487

0.37 kW

n_2 min-1	M_2 Nm	S	i	R_{n2} N	IE1		IEC IE1	
71	49.0	2.0	12.9	6420	**S501_12.9 S1 M1LA6**	494	**S501_12.9 P80 BN80A6**	495
73	47.2	1.2	12.4	3800	**S401_12.4 S1 M1LA6**	492	**S401_12.4 P80 BN80A6**	493
85	40.6	1.4	10.7	3800	**S401_10.7 S1 M1LA6**	492	**S401_10.7 P80 BN80A6**	493
87	39.8	2.9	10.5	6020	**S501_10.5 S1 M1LA6**	494	**S501_10.5 P80 BN80A6**	495
102	33.8	1.0	8.9	2400	**S301_8.9 S1 M1LA6**	490	**S301_8.9 P80 BN80A6**	491
104	33.2	0.9	13.1	2390			**S301_13.1 P71 BN71B4**	491
105	32.9	2.1	8.6	3800	**S401_8.6 S1 M1LA6**	492	**S401_8.6 P80 BN80A6**	493
106	32.6	3.1	12.9	5650	**S501_12.9 S1 M1SD4**	494	**S501_12.9 P71 BN71B4**	495
110	31.3	1.6	12.4	3800	**S401_12.4 S1 M1SD4**	492	**S401_12.4 P71 BN71B4**	493
126	27.5	1.1	7.2	1500	**S201_7.2 S1 M1LA6**	488	**S201_7.2 P80 BN80A6**	489
127	27.2	3.3	7.2	3800	**S401_7.2 S1 M1LA6**	492	**S401_7.2 P80 BN80A6**	493
128	27.0	2.1	7.1	2260	**S301_7.1 S1 M1LA6**	490	**S301_7.1 P80 BN80A6**	491
128	27.0	1.9	10.7	3800	**S401_10.7 S1 M1SD4**	492	**S401_10.7 P71 BN71B4**	493
133	26.0	1.2	10.3	2240	**S301_10.3 S1 M1SD4**	490	**S301_10.3 P71 BN71B4**	491
154	22.5	1.3	8.9	2150	**S301_8.9 S1 M1SD4**	490	**S301_8.9 P71 BN71B4**	491
156	22.2	2.6	5.8	2140	**S301_5.8 S1 M1LA6**	490	**S301_5.8 P80 BN80A6**	491
156	22.1	1.4	5.8	1500	**S201_5.8 S1 M1LA6**	488	**S201_5.8 P80 BN80A6**	489
159	21.8	2.7	8.6	3610	**S401_8.6 S1 M1SD4**	492	**S401_8.6 P71 BN71B4**	493
184	18.8	3.1	4.9	2040	**S301_4.9 S1 M1LA6**	490	**S301_4.9 P80 BN80A6**	491
190	18.3	1.4	7.2	1460	**S201_7.2 S1 M1SD4**	488	**S201_7.2 P71 BN71B4**	489
191	18.1	1.7	4.8	1460	**S201_4.8 S1 M1LA6**	488	**S201_4.8 P80 BN80A6**	489
193	17.9	2.8	7.1	2020	**S301_7.1 S1 M1SD4**	490	**S301_7.1 P71 BN71B4**	491
214	16.2	1.5	13.1	1960			**S301_13.1 P71 BN71A2**	491
224	15.4	1.0	6.1	710	**S101_6.1 S1 M1SD4**	486	**S101_6.1 P71 BN71B4**	487
227	15.3	2.6	12.4	3230			**S401_12.4 P71 BN71A2**	493

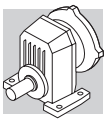

0.37 kW

n_2 min-1	M_2 Nm	S	i	R_{n2} N	IE1		IEC IE1	
231	15.0	2.0	3.9	1380	**S201_3.9 S1 M1LA6**	488	**S201_3.9 P80 BN80A6**	489
234	14.8	3.4	5.8	1900	**S301_5.8 S1 M1SD4**	490	**S301_5.8 P71 BN71B4**	491
235	14.7	1.8	5.8	1390	**S201_5.8 S1 M1SD4**	488	**S201_5.8 P71 BN71B4**	489
237	14.6	1.0	3.8	690	**S101_3.8 S1 M1LA6**	486	**S101_3.8 P80 BN80A6**	487
261	13.2	1.0	10.8	1350	**S201_10.8 S05 M05C2**	488	**S201_10.8 P71 BN71A2**	489
263	13.1	3.0	10.7	3080			**S401_10.7 P71 BN71A2**	493
273	12.7	1.9	10.3	1820			**S301_10.3 P71 BN71A2**	491
284	12.2	1.1	3.2	670	**S101_3.2 S1 M1LA6**	486	**S101_3.2 P80 BN80A6**	487
287	12.1	2.2	4.8	1310	**S201_4.8 S1 M1SD4**	488	**S201_4.8 P71 BN71B4**	489
290	11.9	1.0	4.7	670	**S101_4.7 S1 M1SD4**	486	**S101_4.7 P71 BN71B4**	487
293	11.8	2.5	3.1	1300	**S201_3.1 S1 M1LA6**	488	**S201_3.1 P80 BN80A6**	489
316	11.0	2.2	8.9	1740			**S301_8.9 P71 BN71A2**	491
331	10.5	1.2	8.5	1270	**S201_8.5 S05 M05C2**	488	**S201_8.5 P71 BN71A2**	489
348	9.9	2.6	3.9	1240	**S201_3.9 S1 M1SD4**	488	**S201_3.9 P71 BN71B4**	489
356	9.7	1.2	3.8	640	**S101_3.8 S1 M1SD4**	486	**S101_3.8 P71 BN71B4**	487
364	9.5	1.3	2.5	630	**S101_2.5 S1 M1LA6**	486	**S101_2.5 P80 BN80A6**	487
373	9.3	3.2	2.4	1210	**S201_2.4 S1 M1LA6**	488	**S201_2.4 P80 BN80A6**	489
389	8.9	2.4	7.2	1210	**S201_7.2 S05 M05C2**	488	**S201_7.2 P71 BN71A2**	489
407	8.5	1.4	6.9	630	**S101_6.9 S05 M05C2**	486	**S101_6.9 P71 BN71A2**	487
428	8.1	1.5	3.2	620	**S101_3.2 S1 M1SD4**	486	**S101_3.2 P71 BN71B4**	487
440	7.9	3.3	3.1	1160	**S201_3.1 S1 M1SD4**	488	**S201_3.1 P71 BN71B4**	489
460	7.5	1.6	6.1	610	**S101_6.1 S05 M05C2**	486	**S101_6.1 P71 BN71A2**	487
480	7.2	2.8	1.9	1130	**S201_1.9 S1 M1LA6**	488	**S201_1.9 P80 BN80A6**	489
483	7.2	2.9	5.8	1130	**S201_5.8 S05 M05C2**	488	**S201_5.8 P71 BN71A2**	489
485	7.1	1.7	1.9	590	**S101_1.9 S1 M1LA6**	486	**S101_1.9 P80 BN80A6**	487
548	6.3	1.6	2.5	580	**S101_2.5 S1 M1SD4**	486	**S101_2.5 P71 BN71B4**	487
594	5.8	1.7	4.7	570	**S101_4.7 S05 M05C2**	486	**S101_4.7 P71 BN71A2**	487
640	5.4	2.2	1.4	550	**S101_1.4 S1 M1LA6**	486	**S101_1.4 P80 BN80A6**	487
731	4.7	2.1	3.8	540	**S101_3.8 S05 M05C2**	486	**S101_3.8 P71 BN71A2**	487
731	4.7	2.1	1.9	540	**S101_1.9 S1 M1SD4**	486	**S101_1.9 P71 BN71B4**	487
878	3.9	2.5	3.2	520	**S101_3.2 S05 M05C2**	486	**S101_3.2 P71 BN71A2**	487
964	3.6	2.8	1.4	500	**S101_1.4 S1 M1SD4**	486	**S101_1.4 P71 BN71B4**	487
1124	3.1	2.6	2.5	480	**S101_2.5 S05 M05C2**	486	**S101_2.5 P71 BN71A2**	487
1499	2.3	3.5	1.9	440	**S101_1.9 S05 M05C2**	486	**S101_1.9 P71 BN71A2**	487
1977	1.8	4.6	1.4	410	**S101_1.4 S05 M05C2**	486	**S101_1.4 P71 BN71A2**	487

0.55 kW

n_2 min-1	M_2 Nm	S	i	R_{n2} N	IE1		IEC IE1	
71	72.1	1.4	12.9	6290	**S501_12.9 S2 M2SA6**	494	**S501_12.9 P80 BN80B6**	495
86	59.7	1.0	10.7	3800	**S401_10.7 S2 M2SA6**	492	**S401_10.7 P80 BN80B6**	493
88	58.5	2.0	10.5	5910	**S501_10.5 S2 M2SA6**	494	**S501_10.5 P80 BN80B6**	495
105	49.1	2.5	8.8	5600	**S501_8.8 S2 M2SA6**	494	**S501_8.8 P80 BN80B6**	495
107	48.3	1.4	8.6	3800	**S401_8.6 S2 M2SA6**	492	**S401_8.6 P80 BN80B6**	493
107	48.1	2.1	12.9	5560	**S501_12.9 S1 M1LA4**	494	**S501_12.9 P80 BN80A4**	495
111	46.3	1.1	12.4	3800	**S401_12.4 S1 M1LA4**	492	**S401_12.4 P80 BN80A4**	493
124	41.4	3.4	7.4	5310	**S501_7.4 S2 M2SA6**	494	**S501_7.4 P80 BN80B6**	495
129	40.0	2.2	7.2	3780	**S401_7.2 S2 M2SA6**	492	**S401_7.2 P80 BN80B6**	493
129	39.8	1.3	10.7	3770	**S401_10.7 S1 M1LA4**	492	**S401_10.7 P80 BN80A4**	493
130	39.7	1.5	7.1	2150	**S301_7.1 S2 M2SA6**	490	**S301_7.1 P80 BN80B6**	491
132	39.0	2.8	10.5	5220	**S501_10.5 S1 M1LA4**	494	**S501_10.5 P80 BN80A4**	495
152	33.9	3.1	6.1	3600	**S401_6.1 S2 M2SA6**	492	**S401_6.1 P80 BN80B6**	493
155	33.2	0.9	8.9	2060	**S301_8.9 S1 M1LA4**	490	**S301_8.9 P80 BN80A4**	491

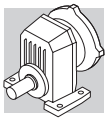

0.55 kW

n_2 min-1	M_2 Nm	S	i	R_{n2} N	IE1		IEC IE1	
157	32.7	1.8	5.8	2050	**S301_5.8 S2 M2SA6**	490	**S301_5.8 P80 BN80B6**	491
157	32.7	3.4	8.8	4940	**S501_8.8 S1 M1LA4**	494	**S501_8.8 P80 BN80A4**	495
158	32.6	0.9	5.8	1420	**S201_5.8 S2 M2SA6**	488	**S201_5.8 P80 BN80B6**	489
160	32.2	1.9	8.6	3540	**S401_8.6 S1 M1LA4**	492	**S401_8.6 P80 BN80A4**	493
186	27.6	2.1	4.9	1960	**S301_4.9 S2 M2SA6**	490	**S301_4.9 P80 BN80B6**	491
191	26.9	1.0	7.2	1370	**S201_7.2 S1 M1LA4**	488	**S201_7.2 P80 BN80A4**	489
193	26.7	1.1	4.8	1370	**S201_4.8 S2 M2SA6**	488	**S201_4.8 P80 BN80B6**	489
193	26.7	3.0	7.2	3350	**S401_7.2 S1 M1LA4**	492	**S401_7.2 P80 BN80A4**	493
195	26.4	1.9	7.1	1940	**S301_7.1 S1 M1LA4**	490	**S301_7.1 P80 BN80A4**	491
214	24.0	1.0	13.1	1900			**S301_13.1 P71 BN71B2**	491
218	23.6	3.4	12.9	4460	**S501_12.9 S1 M1SD2**	494	**S501_12.9 P71 BN71B2**	495
227	22.7	1.8	12.4	3190	**S401_12.4 S1 M1SD2**	492	**S401_12.4 P71 BN71B2**	493
233	22.1	2.6	3.9	1850	**S301_3.9 S2 M2SA6**	490	**S301_3.9 P80 BN80B6**	491
234	22.0	1.4	3.9	1300	**S201_3.9 S2 M2SA6**	488	**S201_3.9 P80 BN80B6**	489
236	21.8	2.3	5.8	1840	**S301_5.8 S1 M1LA4**	490	**S301_5.8 P80 BN80A4**	491
237	21.7	1.2	5.8	1310	**S201_5.8 S1 M1LA4**	488	**S201_5.8 P80 BN80A4**	489
263	19.5	2.0	10.7	3040	**S401_10.7 S1 M1SD2**	492	**S401_10.7 P71 BN71B2**	493
273	18.9	1.3	10.3	1780	**S301_10.3 S1 M1SD2**	490	**S301_10.3 P71 BN71B2**	491
280	18.4	2.7	4.9	1760	**S301_4.9 S1 M1LA4**	490	**S301_4.9 P80 BN80A4**	491
289	17.8	1.5	4.8	1250	**S201_4.8 S1 M1LA4**	488	**S201_4.8 P80 BN80A4**	489
296	17.4	1.7	3.1	1230	**S201_3.1 S2 M2SA6**	488	**S201_3.1 P80 BN80B6**	489
300	17.1	3.4	3.1	1720	**S301_3.1 S2 M2SA6**	490	**S301_3.1 P80 BN80B6**	491
316	16.3	1.5	8.9	1700	**S301_8.9 S1 M1SD2**	490	**S301_8.9 P71 BN71B2**	491
325	15.8	3.0	8.6	2850	**S401_8.6 S1 M1SD2**	492	**S401_8.6 P71 BN71B2**	493
350	14.7	3.4	3.9	1650	**S301_3.9 S1 M1LA4**	490	**S301_3.9 P80 BN80A4**	491
351	14.7	1.8	3.9	1190	**S201_3.9 S1 M1LA4**	488	**S201_3.9 P80 BN80A4**	489
377	13.6	2.2	2.4	1160	**S201_2.4 S2 M2SA6**	488	**S201_2.4 P80 BN80B6**	489
389	13.2	1.6	7.2	1160	**S201_7.2 S1 M1SD2**	488	**S201_7.2 P71 BN71B2**	489
396	13.0	3.1	7.1	1600	**S301_7.1 S1 M1SD2**	490	**S301_7.1 P71 BN71B2**	491
407	12.6	0.9	6.9	570	**S101_6.9 S1 M1SD2**	486	**S101_6.9 P71 BN71B2**	487
431	11.9	1.0	3.2	560	**S101_3.2 S1 M1LA4**	486	**S101_3.2 P80 BN80A4**	487
444	11.6	2.2	3.1	1120	**S201_3.1 S1 M1LA4**	488	**S201_3.1 P80 BN80A4**	489
460	11.2	1.1	6.1	570	**S101_6.1 S1 M1SD2**	486	**S101_6.1 P71 BN71B2**	487
483	10.7	2.0	5.8	1100	**S201_5.8 S1 M1SD2**	488	**S201_5.8 P71 BN71B2**	489
486	10.6	1.9	1.9	1080	**S201_1.9 S2 M2SA6**	488	**S201_1.9 P80 BN80B6**	489
491	10.5	1.1	1.9	540	**S101_1.9 S2 M2SA6**	486	**S101_1.9 P80 BN80B6**	487
504	10.2	3.4	1.8	1470	**S301_1.8 S2 M2SA6**	490	**S301_1.8 P80 BN80B6**	491
552	9.3	1.1	2.5	540	**S101_2.5 S1 M1LA4**	486	**S101_2.5 P80 BN80A4**	487
566	9.1	2.9	2.4	1050	**S201_2.4 S1 M1LA4**	488	**S201_2.4 P80 BN80A4**	489
589	8.7	2.4	4.8	1040	**S201_4.8 S1 M1SD2**	488	**S201_4.8 P71 BN71B2**	489
594	8.7	1.2	4.7	540	**S101_4.7 S1 M1SD2**	486	**S101_4.7 P71 BN71B2**	487
647	8.0	1.5	1.4	510	**S101_1.4 S2 M2SA6**	486	**S101_1.4 P80 BN80B6**	487
661	7.8	2.6	1.4	990	**S201_1.4 S2 M2SA6**	488	**S201_1.4 P80 BN80B6**	489
714	7.2	2.9	3.9	980	**S201_3.9 S1 M1SD2**	488	**S201_3.9 P71 BN71B2**	489
728	7.1	2.4	1.9	970	**S201_1.9 S1 M1LA4**	488	**S201_1.9 P80 BN80A4**	489
731	7.0	1.4	3.8	510	**S101_3.8 S1 M1SD2**	486	**S101_3.8 P71 BN71B2**	487
736	7.0	1.4	1.9	500	**S101_1.9 S1 M1LA4**	486	**S101_1.9 P80 BN80A4**	487
878	5.9	1.7	3.2	490	**S101_3.2 S1 M1SD2**	486	**S101_3.2 P71 BN71B2**	487
971	5.3	1.9	1.4	470	**S101_1.4 S1 M1LA4**	486	**S101_1.4 P80 BN80A4**	487
992	5.2	3.3	1.4	890			**S201_1.4 P80 BN80A4**	489
1124	4.6	1.7	2.5	460	**S101_2.5 S1 M1SD2**	486	**S101_2.5 P71 BN71B2**	487
1499	3.4	2.3	1.9	430	**S101_1.9 S1 M1SD2**	486	**S101_1.9 P71 BN71B2**	487
1977	2.6	3.1	1.4	390	**S101_1.4 S1 M1SD2**	486	**S101_1.4 P71 BN71B2**	487

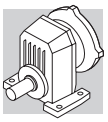

0.75 kW

n_2 min-1	M_2 Nm	S	i	R_{n2} N	IE2		IEC IE2	
73	96	1.0	12.9	6170	**S501_12.9 S3 ME3SA6**	494	**S501_12.9 P90 BE90S6**	495
90	78	1.5	10.5	5810	**S501_10.5 S3 ME3SA6**	494	**S501_10.5 P90 BE90S6**	495
107	65	1.9	8.8	5520	**S501_8.8 S3 ME3SA6**	494	**S501_8.8 P90 BE90S6**	495
111	63	1.6	12.9	5460	**S501_12.9 S2 ME2SB4**	494	**S501_12.9 P80 BE80B4**	495
127	55	2.5	7.4	5240	**S501_7.4 S3 ME3SA6**	494	**S501_7.4 P90 BE90S6**	495
131	53	1.7	7.2	3700	**S401_7.2 S3 ME3SA6**	492	**S401_7.2 P90 BE90S6**	493
134	52	1.0	10.7	3670	**S401_10.7 S2 ME2SB4**	492	**S401_10.7 P80 BE80B4**	493
137	51	2.1	10.5	5130	**S501_10.5 S2 ME2SB4**	494	**S501_10.5 P80 BE80B4**	495
155	45	2.3	6.1	3530	**S401_6.1 S3 ME3SA6**	492	**S401_6.1 P90 BE90S6**	493
161	44	1.3	5.8	1960	**S301_5.8 S3 ME3SA6**	490	**S301_5.8 P90 BE90S6**	491
163	43	2.6	8.8	4870	**S501_8.8 S2 ME2SB4**	494	**S501_8.8 P80 BE80B4**	495
166	42	1.4	8.6	3460	**S401_8.6 S2 ME2SB4**	492	**S401_8.6 P80 BE80B4**	493
191	37	1.6	4.9	1880	**S301_4.9 S3 ME3SA6**	490	**S301_4.9 P90 BE90S6**	491
194	36	2.9	4.8	3300	**S401_4.8 S3 ME3SA6**	492	**S401_4.8 P90 BE90S6**	493
200	35	2.3	7.2	3280	**S401_7.2 S2 ME2SB4**	492	**S401_7.2 P80 BE80B4**	493
202	35	1.4	7.1	1860	**S301_7.1 S2 ME2SB4**	490	**S301_7.1 P80 BE80B4**	491
221	32	2.5	12.9	4420	**S501_12.9 S2 ME2SA2**	494	**S501_12.9 P80 BE80A2**	495
230	31	1.3	12.4	3150	**S401_12.4 S2 ME2SA2**	492	**S401_12.4 P80 BE80A2**	493
236	30	3.0	6.1	3120	**S401_6.1 S2 ME2SB4**	492	**S401_6.1 P80 BE80B4**	493
238	29	2.0	3.9	1780	**S301_3.9 S3 ME3SA6**	490	**S301_3.9 P90 BE90S6**	491
245	29	1.7	5.8	1780	**S301_5.8 S2 ME2SB4**	490	**S301_5.8 P80 BE80B4**	491
246	29	0.9	5.8	1160	**S201_5.8 S2 ME2SB4**	488	**S201_5.8 P80 BE80B4**	489
267	26	1.5	10.7	3000	**S401_10.7 S2 ME2SA2**	492	**S401_10.7 P80 BE80A2**	493
273	26	3.3	10.5	4140	**S501_10.5 S2 ME2SA2**	494	**S501_10.5 P80 BE80A2**	495
277	25	0.9	10.3	1730	**S301_10.3 S2 ME2SA2**	490	**S301_10.3 P80 BE80A2**	491
290	24	2.1	4.9	1700	**S301_4.9 S2 ME2SB4**	490	**S301_4.9 P80 BE80B4**	491
300	23	1.1	4.8	1180	**S201_4.8 S2 ME2SB4**	488	**S201_4.8 P80 BE80B4**	489
302	23	1.3	3.1	1160	**S201_3.1 S3 ME3SA6**	488	**S201_3.1 P90 BE90S6**	489
307	23	2.5	3.1	1670	**S301_3.1 S3 ME3SA6**	490	**S301_3.1 P90 BE90S6**	491
321	22	1.1	8.9	1660	**S301_8.9 S2 ME2SA2**	490	**S301_8.9 P80 BE80A2**	491
330	21	2.3	8.6	2820	**S401_8.6 S2 ME2SA2**	492	**S401_8.6 P80 BE80A2**	493
363	19.3	2.6	3.9	1600	**S301_3.9 S2 ME2SB4**	490	**S301_3.9 P80 BE80B4**	491
364	19.3	1.3	3.9	1130	**S201_3.9 S2 ME2SB4**	488	**S201_3.9 P80 BE80B4**	489
386	18.2	1.6	2.4	1110	**S201_2.4 S3 ME3SA6**	488	**S201_2.4 P90 BE90S6**	489
388	18.1	3.2	2.4	1560	**S301_2.4 S3 ME3SA6**	490	**S301_2.4 P90 BE90S6**	491
395	17.8	1.2	7.2	1120	**S201_7.2 S2 ME2SA2**	488	**S201_7.2 P80 BE80A2**	489
402	17.5	2.3	7.1	1560	**S301_7.1 S2 ME2SA2**	490	**S301_7.1 P80 BE80A2**	491
460	15.2	1.7	3.1	1070	**S201_3.1 S2 ME2SB4**	488	**S201_3.1 P80 BE80B4**	489
467	15.0	3.3	3.1	1490	**S301_3.1 S2 ME2SB4**	490	**S301_3.1 P80 BE80B4**	491
488	14.4	2.8	5.8	1480	**S301_5.8 S2 ME2SA2**	490	**S301_5.8 P80 BE80A2**	491
490	14.3	1.5	5.8	1060	**S201_5.8 S2 ME2SA2**	488	**S201_5.8 P80 BE80A2**	489
496	14.1	1.4	1.9	1040	**S201_1.9 S3 ME3SA6**	488	**S201_1.9 P90 BE90S6**	489
515	13.6	2.6	1.8	1440	**S301_1.8 S3 ME3SA6**	490	**S301_1.8 P90 BE90S6**	491
578	12.1	3.3	4.9	1410	**S301_4.9 S2 ME2SA2**	490	**S301_4.9 P80 BE80A2**	491
587	11.9	2.2	2.4	1010	**S201_2.4 S2 ME2SB4**	488	**S201_2.4 P80 BE80B4**	489
591	11.9	4.2	2.4	1380	**S301_2.4 S2 ME2SB4**	490	**S301_2.4 P80 BE80B4**	491
598	11.7	1.8	4.8	1010	**S201_4.8 S2 ME2SA2**	488	**S201_4.8 P80 BE80A2**	489
661	10.6	1.1	1.4	460	**S101_1.4 S3 ME3SA6**	486	**S101_1.4 P90 BE90S6**	487
668	10.5	3.3	1.4	1330	**S301_1.4 S3 ME3SA6**	490	**S301_1.4 P90 BE90S6**	491
676	10.4	1.9	1.4	960	**S201_1.4 S3 ME3SA6**	488	**S201_1.4 P90 BE90S6**	489
725	9.7	2.2	3.9	960	**S201_3.9 S2 ME2SA2**	488	**S201_3.9 P80 BE80A2**	489
741	9.5	1.1	3.8	480	**S101_3.8 S2 ME2SA2**	486	**S101_3.8 P80 BE80A2**	487
755	9.3	1.8	1.9	940	**S201_1.9 S2 ME2SB4**	488	**S201_1.9 P80 BE80B4**	489
763	9.2	1.1	1.9	460	**S101_1.9 S2 ME2SB4**	486	**S101_1.9 P80 BE80B4**	487
783	8.9	3.4	1.8	1280	**S301_1.8 S2 ME2SB4**	490	**S301_1.8 P80 BE80B4**	491
891	7.9	1.3	3.2	460	**S101_3.2 S2 ME2SA2**	486	**S101_3.2 P80 BE80A2**	487
916	7.7	2.7	3.1	900	**S201_3.1 S2 ME2SA2**	488	**S201_3.1 P80 BE80A2**	489

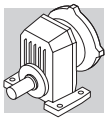

0.75 kW

n_2 min-1	M_2 Nm	S	i	R_{n2} N	IE2		IEC IE2	
1006	7.0	1.4	1.4	440	**S101_1.4 S2 ME2SB4**	486	**S101_1.4 P80 BE80B4**	487
1028	6.8	2.5	1.4	860	**S201_1.4 S2 ME2SB4**	488	**S201_1.4 P80 BE80B4**	489
1140	6.2	1.3	2.5	440	**S101_2.5 S2 ME2SA2**	486	**S101_2.5 P80 BE80A2**	487
1169	6.0	3.5	2.4	840	**S201_2.4 S2 ME2SA2**	488	**S201_2.4 P80 BE80A2**	489
1504	4.7	2.8	1.9	780	**S201_1.9 S2 ME2SA2**	488	**S201_1.9 P80 BE80A2**	489
1520	4.6	1.7	1.9	410	**S101_1.9 S2 ME2SA2**	486	**S101_1.9 P80 BE80A2**	487
2006	3.5	2.3	1.4	380	**S101_1.4 S2 ME2SA2**	486	**S101_1.4 P80 BE80A2**	487

1.1 kW

n_2 min-1	M_2 Nm	S	i	R_{n2} N	IE2		IEC IE2	
90	114	1.0	10.5	5650	**S501_10.5 S3 ME3LA6**	494	**S501_10.5 P100 BE100M6**	495
108	96	1.3	8.8	5380	**S501_8.8 S3 ME3LA6**	494	**S501_8.8 P100 BE100M6**	495
111	93	1.1	12.9	5320	**S501_12.9 S3 ME3SA4**	494	**S501_12.9 P90 BE90S4**	495
128	81	1.7	7.4	5120	**S501_7.4 S3 ME3LA6**	494	**S501_7.4 P100 BE100M6**	495
132	78	1.2	7.2	3550	**S401_7.2 S3 ME3LA6**	492	**S401_7.2 P100 BE100M6**	493
137	76	1.5	10.5	5020	**S501_10.5 S3 ME3SA4**	494	**S501_10.5 P90 BE90S4**	495
156	66	1.6	6.1	3400	**S401_6.1 S3 ME3LA6**	492	**S401_6.1 P100 BE100M6**	493
156	66	2.3	6.1	4840	**S501_6.1 S3 ME3LA6**	494	**S501_6.1 P100 BE100M6**	495
163	64	1.7	8.8	4770	**S501_8.8 S3 ME3SA4**	494	**S501_8.8 P90 BE90S4**	495
166	63	1.0	8.6	3350	**S401_8.6 S3 ME3SA4**	492	**S401_8.6 P90 BE90S4**	493
192	54	1.1	4.9	1740	**S301_4.9 S3 ME3LA6**	490	**S301_4.9 P100 BE100M6**	491
193	54	2.4	7.4	4530	**S501_7.4 S3 ME3SA4**	494	**S501_7.4 P90 BE90S4**	495
196	53	2.0	4.8	3200	**S401_4.8 S3 ME3LA6**	492	**S401_4.8 P100 BE100M6**	493
200	52	1.5	7.2	3180	**S401_7.2 S3 ME3SA4**	492	**S401_7.2 P90 BE90S4**	493
202	51	1.0	7.1	1730	**S301_7.1 S3 ME3SA4**	490	**S301_7.1 P90 BE90S4**	491
220	47	1.7	12.9	4350	**S501_12.9 S2 ME2SB2**	494	**S501_12.9 P90 BE90B2**	495
236	44	2.0	6.1	3040	**S401_6.1 S3 ME3SA4**	492	**S401_6.1 P90 BE90S4**	493
236	44	3.0	6.1	4270	**S501_6.1 S3 ME3SA4**	494	**S501_6.1 P90 BE90S4**	495
240	43	1.3	3.9	1670	**S301_3.9 S3 ME3LA6**	490	**S301_3.9 P100 BE100M6**	491
245	42	1.2	5.8	1670	**S301_5.8 S3 ME3SA4**	490	**S301_5.8 P90 BE90S4**	491
248	42	2.5	3.8	2990	**S401_3.8 S3 ME3LA6**	492	**S401_3.8 P100 BE100M6**	493
265	39	1.0	10.7	2930	**S401_10.7 S2 ME2SB2**	492	**S401_10.7 P90 BE90B2**	493
271	38	2.2	10.5	4090	**S501_10.5 S2 ME2SB2**	494	**S501_10.5 P90 BE90B2**	495
290	36	1.4	4.9	1610	**S301_4.9 S3 ME3SA4**	490	**S301_4.9 P90 BE90S4**	491
296	35	2.6	4.8	2850	**S401_4.8 S3 ME3SA4**	492	**S401_4.8 P90 BE90S4**	493
309	33	1.7	3.1	1580	**S301_3.1 S3 ME3LA6**	490	**S301_3.1 P100 BE100M6**	491
310	33	3.2	3.1	2810	**S401_3.1 S3 ME3LA6**	492	**S401_3.1 P100 BE100M6**	493
323	32	2.7	8.8	3870	**S501_8.8 S2 ME2SB2**	494	**S501_8.8 P90 BE90B2**	495
328	31	1.5	8.6	2760	**S401_8.6 S2 ME2SB2**	492	**S401_8.6 P90 BE90B2**	493
363	29	1.7	3.9	1530	**S301_3.9 S3 ME3SA4**	490	**S301_3.9 P90 BE90S4**	491
364	29	0.9	3.9	950	**S201_3.9 S3 ME3SA4**	488	**S201_3.9 P90 BE90S4**	489
375	28	3.3	3.8	2650	**S401_3.8 S3 ME3SA4**	492	**S401_3.8 P90 BE90S4**	493
390	26	2.2	2.4	1490	**S301_2.4 S3 ME3LA6**	490	**S301_2.4 P100 BE100M6**	491
396	26	2.4	7.2	2610	**S401_7.2 S2 ME2SB2**	492	**S401_7.2 P90 BE90B2**	493
399	26	1.6	7.1	1500	**S301_7.1 S2 ME2SB2**	490	**S301_7.1 P90 BE90B2**	491
460	23	1.2	3.1	990	**S201_3.1 S3 ME3SA4**	488	**S201_3.1 P90 BE90S4**	489
467	22	2.3	3.1	1430	**S301_3.1 S3 ME3SA4**	490	**S301_3.1 P90 BE90S4**	491
484	21	1.9	5.8	1420	**S301_5.8 S2 ME2SB2**	490	**S301_5.8 P90 BE90B2**	491
499	21	1.0	1.9	960	**S201_1.9 S3 ME3LA6**	488	**S201_1.9 P100 BE100M6**	489
510	20	3.5	1.9	2420	**S401_1.9 S3 ME3LA6**	492	**S401_1.9 P100 BE100M6**	493
518	19.9	1.8	1.8	1380	**S301_1.8 S3 ME3LA6**	490	**S301_1.8 P100 BE100M6**	491
574	17.9	2.2	4.9	1360	**S301_4.9 S2 ME2SB2**	490	**S301_4.9 P90 BE90B2**	491
587	17.7	1.5	2.4	940	**S201_2.4 S3 ME3SA4**	488	**S201_2.4 P90 BE90S4**	489

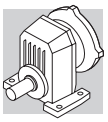

1.1 kW

n_2 min-1	M_2 Nm	S	i	R_{n2} N	IE2		IEC IE2	
591	17.6	2.8	2.4	1340	**S301_2.4 S3 ME3SA4**	490	**S301_2.4 P90 BE90S4**	491
593	17.3	1.2	4.8	950	**S201_4.8 S2 ME2SB2**	488	**S201_4.8 P90 BE90B2**	489
671	15.3	2.3	1.4	1290	**S301_1.4 S3 ME3LA6**	490	**S301_1.4 P100 BE100M6**	491
679	15.2	1.3	1.4	900	**S201_1.4 S3 ME3LA6**	488	**S201_1.4 P100 BE100M6**	489
717	14.3	2.8	3.9	1280	**S301_3.9 S2 ME2SB2**	490	**S301_3.9 P90 BE90B2**	491
719	14.3	1.5	3.9	910	**S201_3.9 S2 ME2SB2**	488	**S201_3.9 P90 BE90B2**	489
755	13.7	1.2	1.9	890	**S201_1.9 S3 ME3SA4**	488	**S201_1.9 P90 BE90S4**	489
783	13.2	2.3	1.8	1240	**S301_1.8 S3 ME3SA4**	490	**S301_1.8 P90 BE90S4**	491
910	11.3	1.9	3.1	860	**S201_3.1 S2 ME2SB2**	488	**S201_3.1 P90 BE90B2**	489
1006	10.3	1.0	1.4	390	**S101_1.4 S3 ME3SA4**	486	**S101_1.4 P90 BE90S4**	487
1016	10.2	2.9	1.4	1150	**S301_1.4 S3 ME3SA4**	490	**S301_1.4 P90 BE90S4**	491
1028	10.1	1.7	1.4	820	**S201_1.4 S3 ME3SA4**	488	**S201_1.4 P90 BE90S4**	489
1161	8.9	2.4	2.4	810	**S201_2.4 S2 ME2SB2**	488	**S201_2.4 P90 BE90B2**	489
1494	6.9	1.9	1.9	750	**S201_1.9 S2 ME2SB2**	488	**S201_1.9 P90 BE90B2**	489
1509	6.8	1.2	1.9	380	**S101_1.9 S2 ME2SB2**	486	**S101_1.9 P90 BE90B2**	487
1991	5.2	1.5	1.4	350	**S101_1.4 S2 ME2SB2**	486	**S101_1.4 P90 BE90B2**	487
2034	5.1	2.6	1.4	690	**S201_1.4 S2 ME2SB2**	488	**S201_1.4 P90 BE90B2**	489

1.5 kW

n_2 min-1	M_2 Nm	S	i	R_{n2} N	IE2		IEC IE2	
108	130	1.0	8.8	5190	**S501_8.8 S3 ME3LB6**	494	**S501_8.8 P100 BE100LA6**	495
128	110	1.3	7.4	4960	**S501_7.4 S3 ME3LB6**	494	**S501_7.4 P100 BE100LA6**	495
137	102	1.1	10.5	4880	**S501_10.5 S3 ME3SB4**	494	**S501_10.5 P90 BE90LA4**	495
156	90	1.7	6.1	4700	**S501_6.1 S3 ME3LB6**	494	**S501_6.1 P100 BE100LA6**	495
163	86	1.3	8.8	4660	**S501_8.8 S3 ME3SB4**	494	**S501_8.8 P90 BE90LA4**	495
193	73	1.8	7.4	4440	**S501_7.4 S3 ME3SB4**	494	**S501_7.4 P90 BE90LA4**	495
196	72	1.5	4.8	3070	**S401_4.8 S3 ME3LB6**	492	**S401_4.8 P100 BE100LA6**	493
199	71	2.5	4.8	4380	**S501_4.8 S3 ME3LB6**	494	**S501_4.8 P100 BE100LA6**	495
200	70	1.1	7.2	3070	**S401_7.2 S3 ME3SB4**	492	**S401_7.2 P90 BE90LA4**	493
222	63	1.3	12.9	4270	**S501_12.9 S3 ME3SA2**	494	**S501_12.9 P90 BE90SA2**	495
236	59	1.5	6.1	2940	**S401_6.1 S3 ME3SB4**	492	**S401_6.1 P90 BE90LA4**	493
236	59	2.2	6.1	4190	**S501_6.1 S3 ME3SB4**	494	**S501_6.1 P90 BE90LA4**	495
248	57	1.9	3.8	2880	**S401_3.8 S3 ME3LB6**	492	**S401_3.8 P100 BE100LA6**	493
273	51	1.7	10.5	4020	**S501_10.5 S3 ME3SA2**	494	**S501_10.5 P90 BE90SA2**	495
290	48	1.0	4.9	1500	**S301_4.9 S3 ME3SB4**	490	**S301_4.9 P90 BE90LA4**	491
296	47	1.9	4.8	2770	**S401_4.8 S3 ME3SB4**	492	**S401_4.8 P90 BE90LA4**	493
301	47	3.2	4.8	3890	**S501_4.8 S3 ME3SB4**	494	**S501_4.8 P90 BE90LA4**	495
309	45	1.3	3.1	1470	**S301_3.1 S3 ME3LB6**	490	**S301_3.1 P100 BE100LA6**	491
310	45	2.3	3.1	2720	**S401_3.1 S3 ME3LB6**	492	**S401_3.1 P100 BE100LA6**	493
326	43	2.0	8.8	3820	**S501_8.8 S3 ME3SA2**	494	**S501_8.8 P90 BE90SA2**	495
331	42	1.1	8.6	2700	**S401_8.6 S3 ME3SA2**	492	**S401_8.6 P90 BE90SA2**	493
363	39	1.3	3.9	1440	**S301_3.9 S3 ME3SB4**	490	**S301_3.9 P90 BE90LA4**	491
375	37	2.4	3.8	2590	**S401_3.8 S3 ME3SB4**	492	**S401_3.8 P90 BE90LA4**	493
386	36	2.7	7.4	3630	**S501_7.4 S3 ME3SA2**	494	**S501_7.4 P90 BE90SA2**	495
390	36	1.6	2.4	1400	**S301_2.4 S3 ME3LB6**	490	**S301_2.4 P100 BE100LA6**	491
395	36	3.0	2.4	2540	**S401_2.4 S3 ME3LB6**	492	**S401_2.4 P100 BE100LA6**	493
399	35	1.8	7.2	2560	**S401_7.2 S3 ME3SA2**	492	**S401_7.2 P90 BE90SA2**	493
403	35	1.1	7.1	1420	**S301_7.1 S3 ME3SA2**	490	**S301_7.1 P90 BE90SA2**	491
467	30	1.7	3.1	1360	**S301_3.1 S3 ME3SB4**	490	**S301_3.1 P90 BE90LA4**	491
468	30	3.0	3.1	2430	**S401_3.1 S3 ME3SB4**	492	**S401_3.1 P90 BE90LA4**	493
471	30	2.3	6.1	2440	**S401_6.1 S3 ME3SA2**	492	**S401_6.1 P90 BE90SA2**	493
488	29	1.4	5.8	1360	**S301_5.8 S3 ME3SA2**	490	**S301_5.8 P90 BE90SA2**	491

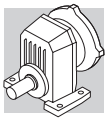

1.5 kW

n_2 min-1	M_2 Nm	S	i	R_{n2} N	IE2		IEC IE2	
510	28	2.5	1.9	2350	**S401_1.9 S3 ME3LB6**	492	**S401_1.9 P100 BE100LA6**	493
518	27	1.3	1.8	1310	**S301_1.8 S3 ME3LB6**	490	**S301_1.8 P100 BE100LA6**	491
579	24	1.6	4.9	1310	**S301_4.9 S3 ME3SA2**	490	**S301_4.9 P90 BE90SA2**	491
587	24	1.1	2.4	870	**S201_2.4 S3 ME3SB4**	488	**S201_2.4 P90 BE90LA4**	489
591	24	2.1	2.4	1290	**S301_2.4 S3 ME3SB4**	490	**S301_2.4 P90 BE90LA4**	491
598	23	3.8	2.4	2200	**S401_2.4 S3 ME3SB4**	492	**S401_2.4 P90 BE90LA4**	493
671	21	1.7	1.4	1230	**S301_1.4 S3 ME3LB6**	490	**S301_1.4 P100 BE100LA6**	491
679	21	1.0	1.4	830	**S201_1.4 S3 ME3LB6**	488	**S201_1.4 P100 BE100LA6**	489
693	20	3.5	1.4	2150	**S401_1.4 S3 ME3LB6**	492	**S401_1.4 P100 BE100LA6**	493
724	19.4	2.1	3.9	1240	**S301_3.9 S3 ME3SA2**	490	**S301_3.9 P90 BE90SA2**	491
755	18.6	0.9	1.9	830	**S201_1.9 S3 ME3SB4**	488	**S201_1.9 P90 BE90LA4**	489
772	18.1	3.3	1.9	2090	**S401_1.9 S3 ME3SB4**	492	**S401_1.9 P90 BE90LA4**	493
783	17.9	1.7	1.8	1200	**S301_1.8 S3 ME3SB4**	490	**S301_1.8 P90 BE90LA4**	491
918	15.3	1.4	3.1	810	**S201_3.1 S3 ME3SA2**	488	**S201_3.1 P90 BE90SA2**	489
932	15.1	2.7	3.1	1160	**S301_3.1 S3 ME3SA2**	490	**S301_3.1 P90 BE90SA2**	491
1016	13.8	2.2	1.4	1110	**S301_1.4 S3 ME3SB4**	490	**S301_1.4 P90 BE90LA4**	491
1028	13.6	1.2	1.4	780	**S201_1.4 S3 ME3SB4**	488	**S201_1.4 P90 BE90LA4**	489
1171	12.0	1.8	2.4	770	**S201_2.4 S3 ME3SA2**	488	**S201_2.4 P90 BE90SA2**	489
1507	9.3	1.4	1.9	720	**S201_1.9 S3 ME3SA2**	488	**S201_1.9 P90 BE90SA2**	489
1563	9.0	2.7	1.8	1000	**S301_1.8 S3 ME3SA2**	490	**S301_1.8 P90 BE90SA2**	491
2009	7.0	1.1	1.4	320	**S101_1.4 S3 ME3SA2**	486	**S101_1.4 P90 BE90SA2**	487
2029	6.9	3.5	1.4	920	**S301_1.4 S3 ME3SA2**	490	**S301_1.4 P90 BE90SA2**	491
2052	6.8	1.9	1.4	670	**S201_1.4 S3 ME3SA2**	488	**S201_1.4 P90 BE90SA2**	489

2.2 kW

n_2 min-1	M_2 Nm	S	i	R_{n2} N	IE2		IEC IE2	
158	131	1.1	6.1	4520	**S501_6.1 S4 ME4SA6**	494	**S501_6.1 P112 BE112M6**	495
193	107	1.2	7.4	4280	**S501_7.4 S3 ME3LA4**	494	**S501_7.4 P100 BE100LA4**	495
201	102	1.7	4.8	4230	**S501_4.8 S4 ME4SA6**	494	**S501_4.8 P112 BE112M6**	495
236	87	1.0	6.1	2790	**S401_6.1 S3 ME3LA4**	492	**S401_6.1 P100 BE100LA4**	493
236	87	1.5	6.1	4060	**S501_6.1 S3 ME3LA4**	494	**S501_6.1 P100 BE100LA4**	495
249	83	2.1	3.8	4000	**S501_3.8 S4 ME4SA6**	494	**S501_3.8 P112 BE112M6**	495
250	82	1.3	3.8	2730	**S401_3.8 S4 ME4SA6**	492	**S401_3.8 P112 BE112M6**	493
274	75	1.1	10.5	3910	**S501_10.5 S3 ME3LA2**	494	**S501_10.5 P90 BE90L2**	495
296	70	1.3	4.8	2640	**S401_4.8 S3 ME3LA4**	492	**S401_4.8 P100 BE100LA4**	493
301	68	2.2	4.8	3790	**S501_4.8 S3 ME3LA4**	494	**S501_4.8 P100 BE100LA4**	495
313	66	1.6	3.1	2590	**S401_3.1 S4 ME4SA6**	492	**S401_3.1 P112 BE112M6**	493
314	66	2.4	3.0	3750	**S501_3.0 S4 ME4SA6**	494	**S501_3.0 P112 BE112M6**	495
327	63	1.3	8.8	3730	**S501_8.8 S3 ME3LA2**	494	**S501_8.8 P90 BE90L2**	495
372	55	2.7	3.8	3570	**S501_3.8 S3 ME3LA4**	494	**S501_3.8 P100 BE100LA4**	495
375	55	1.6	3.8	2490	**S401_3.8 S3 ME3LA4**	492	**S401_3.8 P100 BE100LA4**	493
387	53	1.9	7.4	3540	**S501_7.4 S3 ME3LA2**	494	**S501_7.4 P90 BE90L2**	495
394	52	1.1	2.4	1260	**S301_2.4 S4 ME4SA6**	490	**S301_2.4 P112 BE112M6**	491
399	52	2.0	2.4	2450	**S401_2.4 S4 ME4SA6**	492	**S401_2.4 P112 BE112M6**	493
400	51	1.2	7.2	2460	**S401_7.2 S3 ME3LA2**	492	**S401_7.2 P90 BE90L2**	493
467	44	1.1	3.1	1240	**S301_3.1 S3 ME3LA4**	490	**S301_3.1 P100 BE100LA4**	491
468	44	2.0	3.1	2340	**S401_3.1 S3 ME3LA4**	492	**S401_3.1 P100 BE100LA4**	493
470	44	3.2	3.0	3340	**S501_3.0 S3 ME3LA4**	494	**S501_3.0 P100 BE100LA4**	495
472	44	1.6	6.1	2360	**S401_6.1 S3 ME3LA2**	492	**S401_6.1 P90 BE90L2**	493
473	44	2.3	6.1	3340	**S501_6.1 S3 ME3LA2**	494	**S501_6.1 P90 BE90L2**	495
490	42	1.0	5.8	1250	**S301_5.8 S3 ME3LA2**	490	**S301_5.8 P90 BE90L2**	491
516	40	1.8	1.9	2280	**S401_1.9 S4 ME4SA6**	492	**S401_1.9 P112 BE112M6**	493

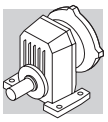

2.2 kW

n_2 min-1	M_2 Nm	S	i	R_{n2} N	IE2		IEC IE2	
534	39	3.2	1.8	3210	**S501_1.8 S4 ME4SA6**	494	**S501_1.8 P112 BE112M6**	495
581	35	1.1	4.9	1220	**S301_4.9 S3 ME3LA2**	490	**S301_4.9 P90 BE90L2**	491
591	35	1.4	2.4	1190	**S301_2.4 S3 ME3LA4**	490	**S301_2.4 P100 BE100LA4**	491
593	35	2.0	4.8	2210	**S401_4.8 S3 ME3LA2**	492	**S401_4.8 P90 BE90L2**	493
598	34	2.6	2.4	2200	**S401_2.4 S3 ME3LA4**	492	**S401_2.4 P100 BE100LA4**	493
679	30	1.2	1.4	1140	**S301_1.4 S4 ME4SA6**	490	**S301_1.4 P112 BE112M6**	491
700	29	2.4	1.4	2090	**S401_1.4 S4 ME4SA6**	492	**S401_1.4 P112 BE112M6**	493
726	28	1.4	3.9	1160	**S301_3.9 S3 ME3LA2**	490	**S301_3.9 P90 BE90L2**	491
751	27	2.6	3.8	2070	**S401_3.8 S3 ME3LA2**	492	**S401_3.8 P90 BE90L2**	493
772	27	2.2	1.9	2040	**S401_1.9 S3 ME3LA4**	492	**S401_1.9 P100 BE100LA4**	493
783	26	1.1	1.8	1120	**S301_1.8 S3 ME3LA4**	490	**S301_1.8 P100 BE100LA4**	491
921	22	0.9	3.1	730	**S201_3.1 S3 ME3LA2**	488	**S201_3.1 P90 BE90L2**	489
936	22	1.8	3.1	1100	**S301_3.1 S3 ME3LA2**	490	**S301_3.1 P90 BE90L2**	491
1016	20	1.5	1.4	1050	**S301_1.4 S3 ME3LA4**	490	**S301_1.4 P100 BE100LA4**	491
1049	19.6	3.1	1.4	1860	**S401_1.4 S3 ME3LA4**	492	**S401_1.4 P100 BE100LA4**	493
1175	17.5	1.2	2.4	710	**S201_2.4 S3 ME3LA2**	488	**S201_2.4 P90 BE90L2**	489
1183	17.4	2.3	2.4	1030	**S301_2.4 S3 ME3LA2**	490	**S301_2.4 P90 BE90L2**	491
1512	13.6	1.0	1.9	670	**S201_1.9 S3 ME3LA2**	488	**S201_1.9 P90 BE90L2**	489
1569	13.1	1.8	1.8	960	**S301_1.8 S3 ME3LA2**	490	**S301_1.8 P90 BE90L2**	491
2036	10.1	2.4	1.4	890	**S301_1.4 S3 ME3LA2**	490	**S301_1.4 P90 BE90L2**	491
2059	10.0	1.3	1.4	630	**S201_1.4 S3 ME3LA2**	488	**S201_1.4 P90 BE90L2**	489

3 kW

n_2 min-1	M_2 Nm	S	i	R_{n2} N	IE2		IEC IE2	
201	140	1.3	4.8	4040	**S501_4.8 S4 ME4SB6**	494	**S501_4.8 P132 BE132S6**	495
238	119	1.1	6.1	3910	**S501_6.1 S3 ME3LB4**	494	**S501_6.1 P100 BE100LB4**	495
249	113	1.5	3.8	3840	**S501_3.8 S4 ME4SB6**	494	**S501_3.8 P132 BE132S6**	495
298	95	1.0	4.8	2490	**S401_4.8 S3 ME3LB4**	492	**S401_4.8 P100 BE100LB4**	493
303	93	1.6	4.8	3670	**S501_4.8 S3 ME3LB4**	494	**S501_4.8 P100 BE100LB4**	495
313	90	1.2	3.1	2440	**S401_3.1 S4 ME4SB6**	492	**S401_3.1 P132 BE132S6**	493
314	89	1.8	3.0	3630	**S501_3.0 S4 ME4SB6**	494	**S501_3.0 P132 BE132S6**	495
328	85	1.0	8.8	3600	**S501_8.8 S3 ME3LB2**	494	**S501_8.8 P100 BE100L2**	495
375	75	2.0	3.8	3470	**S501_3.8 S3 ME3LB4**	494	**S501_3.8 P100 BE100LB4**	495
378	75	1.2	3.8	2370	**S401_3.8 S3 ME3LB4**	492	**S401_3.8 P100 BE100LB4**	493
389	72	1.4	7.4	3440	**S501_7.4 S3 ME3LB2**	494	**S501_7.4 P100 BE100L2**	495
397	71	2.1	2.4	3390	**S501_2.4 S4 ME4SB6**	494	**S501_2.4 P132 BE132S6**	495
399	70	1.5	2.4	2320	**S401_2.4 S4 ME4SB6**	492	**S401_2.4 P132 BE132S6**	493
472	60	1.5	3.1	2250	**S401_3.1 S3 ME3LB4**	492	**S401_3.1 P100 BE100LB4**	493
473	60	2.3	3.0	3260	**S501_3.0 S3 ME3LB4**	494	**S501_3.0 P100 BE100LB4**	495
516	54	1.3	1.9	2170	**S401_1.9 S4 ME4SB6**	492	**S401_1.9 P132 BE132S6**	493
534	53	2.4	1.8	3120	**S501_1.8 S4 ME4SB6**	494	**S501_1.8 P132 BE132S6**	495
595	47	1.1	2.4	1080	**S301_2.4 S3 ME3LB4**	490	**S301_2.4 P100 BE100LB4**	491
596	47	1.5	4.8	2130	**S401_4.8 S3 ME3LB2**	492	**S401_4.8 P100 BE100L2**	493
598	47	2.8	2.4	3040	**S501_2.4 S3 ME3LB4**	494	**S501_2.4 P100 BE100LB4**	495
602	47	1.9	2.4	2120	**S401_2.4 S3 ME3LB4**	492	**S401_2.4 P100 BE100LB4**	493
606	46	2.6	4.8	3030	**S501_4.8 S3 ME3LB2**	494	**S501_4.8 P100 BE100L2**	495
672	42	3.0	1.4	2920	**S501_1.4 S4 ME4SB6**	494	**S501_1.4 P132 BE132S6**	495
700	40	1.7	1.4	2010	**S401_1.4 S4 ME4SB6**	492	**S401_1.4 P132 BE132S6**	493
730	38	1.0	3.9	1070	**S301_3.9 S3 ME3LB2**	490	**S301_3.9 P100 BE100L2**	491
755	37	1.9	3.8	2000	**S401_3.8 S3 ME3LB2**	492	**S401_3.8 P100 BE100L2**	493
778	36	1.7	1.9	1970	**S401_1.9 S3 ME3LB4**	492	**S401_1.9 P100 BE100LB4**	493
789	36	0.8	1.8	900	**S301_1.8 S3 ME3LB4**	490	**S301_1.8 P100 BE100LB4**	491

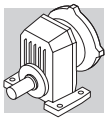

3 kW

n_2 min-1	M_2 Nm	S	i	R_{n2} N	IE2		IEC IE2	
805	35	3.1	1.8	2780	**S501_1.8 S3 ME3LB4**	494	**S501_1.8 P100 BE100LB4**	495
940	30	1.3	3.1	1020	**S301_3.1 S3 ME3LB2**	490	**S301_3.1 P100 BE100L2**	491
943	30	2.4	3.1	1880	**S401_3.1 S3 ME3LB2**	492	**S401_3.1 P100 BE100L2**	493
1023	28	1.1	1.4	980	**S301_1.4 S3 ME3LB4**	490	**S301_1.4 P100 BE100LB4**	491
1056	27	2.2	1.4	1820	**S401_1.4 S3 ME3LB4**	492	**S401_1.4 P100 BE100LB4**	493
1190	24	1.7	2.4	980	**S301_2.4 S3 ME3LB2**	490	**S301_2.4 P100 BE100L2**	491
1204	23	3.0	2.4	1760	**S401_2.4 S3 ME3LB2**	492	**S401_2.4 P100 BE100L2**	493
1555	18.1	2.7	1.9	1630	**S401_1.9 S3 ME3LB2**	492	**S401_1.9 P100 BE100L2**	493
1577	17.8	1.3	1.8	910	**S301_1.8 S3 ME3LB2**	490	**S301_1.8 P100 BE100L2**	491
2046	13.7	1.7	1.4	850	**S301_1.4 S3 ME3LB2**	490	**S301_1.4 P100 BE100L2**	491
2070	13.6	1.0	1.4	580	**S201_1.4 S3 ME3LB2**	488	**S201_1.4 P100 BE100L2**	489

4 kW

n_2 min-1	M_2 Nm	S	i	R_{n2} N	IE2		IEC IE2	
203	184	0.9	4.8	3810	**S501_4.8 S4 ME4LA6**	494	**S501_4.8 P132 BE132MA6**	495
251	149	1.2	3.8	3650	**S501_3.8 S4 ME4LA6**	494	**S501_3.8 P132 BE132MA6**	495
303	126	1.2	4.8	3530	**S501_4.8 S4 ME4SA4**	494	**S501_4.8 P112 BE112M4**	495
317	118	1.4	3.0	3470	**S501_3.0 S4 ME4LA6**	494	**S501_3.0 P132 BE132MA6**	495
375	102	1.5	3.8	3360	**S501_3.8 S4 ME4SA4**	494	**S501_3.8 P112 BE112M4**	495
392	96	1.0	7.4	3320	**S501_7.4 S4 ME4SA2**	494	**S501_7.4 P112 BE112M2**	495
401	93	1.6	2.4	3270	**S501_2.4 S4 ME4LA6**	494	**S501_2.4 P132 BE132MA6**	495
472	81	1.1	3.1	2130	**S401_3.1 S4 ME4SA4**	492	**S401_3.1 P112 BE112M4**	493
473	81	1.7	3.0	3170	**S501_3.0 S4 ME4SA4**	494	**S501_3.0 P112 BE112M4**	495
479	78	1.3	6.1	3160	**S501_6.1 S4 ME4SA2**	494	**S501_6.1 P112 BE112M2**	495
521	72	1.0	1.9	2050	**S401_1.9 S4 ME4LA6**	492	**S401_1.9 P132 BE132MA6**	493
540	69	1.8	1.8	3020	**S501_1.8 S4 ME4LA6**	494	**S501_1.8 P132 BE132MA6**	495
598	64	2.0	2.4	2970	**S501_2.4 S4 ME4SA4**	494	**S501_2.4 P112 BE112M4**	495
602	63	1.4	2.4	2030	**S401_2.4 S4 ME4SA4**	492	**S401_2.4 P112 BE112M4**	493
611	61	2.0	4.8	2960	**S501_4.8 S4 ME4SA2**	494	**S501_4.8 P112 BE112M2**	495
679	55	2.3	1.4	2830	**S501_1.4 S4 ME4LA6**	494	**S501_1.4 P132 BE132MA6**	495
708	53	1.3	1.4	1920	**S401_1.4 S4 ME4LA6**	492	**S401_1.4 P132 BE132MA6**	493
755	50	2.4	3.8	2790	**S501_3.8 S4 ME4SA2**	494	**S501_3.8 P112 BE112M2**	495
761	49	1.4	3.8	1930	**S401_3.8 S4 ME4SA2**	492	**S401_3.8 P112 BE112M2**	493
778	49	1.2	1.9	1900	**S401_1.9 S4 ME4SA4**	492	**S401_1.9 P112 BE112M4**	493
805	47	2.3	1.8	2730	**S501_1.8 S4 ME4SA4**	494	**S501_1.8 P112 BE112M4**	495
953	39	2.8	3.0	2610	**S501_3.0 S4 ME4SA2**	494	**S501_3.0 P112 BE112M2**	495
950	39	1.8	3.1	1820	**S401_3.1 S4 ME4SA2**	492	**S401_3.1 P112 BE112M2**	493
1013	38	2.9	1.4	2560	**S501_1.4 S4 ME4SA4**	494	**S501_1.4 P112 BE112M4**	495
1056	36	1.7	1.4	1760	**S401_1.4 S4 ME4SA4**	492	**S401_1.4 P112 BE112M4**	493
1198	31	1.3	2.4	910	**S301_2.4 S4 ME4SA2**	490	**S301_2.4 P112 BE112M2**	491
1213	31	2.3	2.4	1710	**S401_2.4 S4 ME4SA2**	492	**S401_2.4 P112 BE112M2**	493
1566	24	2.0	1.9	1590	**S401_1.9 S4 ME4SA2**	492	**S401_1.9 P112 BE112M2**	493
1588	24	1.0	1.8	860	**S301_1.8 S4 ME4SA2**	490	**S301_1.8 P112 BE112M2**	491
2061	18.2	1.3	1.4	810	**S301_1.4 S4 ME4SA2**	490	**S301_1.4 P112 BE112M2**	491
2127	17.6	2.7	1.4	1460	**S401_1.4 S4 ME4SA2**	492	**S401_1.4 P112 BE112M2**	493

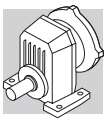

5.5 kW

n_2 min-1	M_2 Nm	S	i	R_{n2} N	IE2	IE3		IEC IE2	IEC IE3	
317	162	1.0	3.0	3260	**S501_3.0 S5 ME5SA6**		494	**S501_3.0 P160 BE160MA6**		495
380	136	1.1	3.8	3150	**S501_3.8 S4 ME4SB4**	**S501_3.8 S4 MX4SB4**	494	**S501_3.8 P132 BE132S4**	**S501_3.8 P132 BX132S4**	495
401	128	1.2	2.4	3090	**S501_2.4 S5 ME5SA6**		494	**S501_2.4 P160 BE160MA6**		495
480	107	1.3	3.0	3000	**S501_3.0 S4 ME4SB4**	**S501_3.0 S4 MX4SB4**	494	**S501_3.0 P132 BE132S4**	**S501_3.0 P132 BX132S4**	495
540	95	1.3	1.8	2880	**S501_1.8 S5 ME5SA6**		494	**S501_1.8 P160 BE160MA6**		495
606	85	1.5	2.4	2830	**S501_2.4 S4 ME4SB4**	**S501_2.4 S4 MX4SB4**	494	**S501_2.4 P132 BE132S4**	**S501_2.4 P132 BX132S4**	495
611	84	1.1	2.4	1870	**S401_2.4 S4 ME4SB4**	**S401_2.4 S4 MX4SB4**	492	**S401_2.4 P132 BE132S4**	**S401_2.4 P132 BX132S4**	493
616	84	1.4	4.8	2840	**S501_4.8 S4 ME4SB2**		494	**S501_4.8 P132 BE132SA2**		495
679	76	1.6	1.4	2720	**S501_1.4 S5 ME5SA6**		494	**S501_1.4 P160 BE160MA6**		495
708	73	1.0	1.4	1780				**S401_1.4 P160 BE160MA6**		493
761	68	1.8	3.8	2690	**S501_3.8 S4 ME4SB2**		494	**S501_3.8 P132 BE132SA2**		495
767	67	1.0	3.8	1810	**S401_3.8 S4 ME4SB2**		492	**S401_3.8 P132 BE132SA2**		493
788	65	0.9	1.9	1770	**S401_1.9 S4 ME4SB4**	**S401_1.9 S4 MX4SB4**	492	**S401_1.9 P132 BE132S4**	**S401_1.9 P132 BX132S4**	493
817	63	1.7	1.8	2610	**S501_1.8 S4 ME4SB4**	**S501_1.8 S4 MX4SB4**	494	**S501_1.8 P132 BE132S4**	**S501_1.8 P132 BX132S4**	495
958	54	1.3	3.1	1730	**S401_3.1 S4 ME4SB2**		492	**S401_3.1 P132 BE132SA2**		493
961	54	2.1	3.0	2530	**S501_3.0 S4 ME4SB2**		494	**S501_3.0 P132 BE132SA2**		495
1027	50	2.2	1.4	2450	**S501_1.4 S4 ME4SB4**	**S501_1.4 S4 MX4SB4**	494	**S501_1.4 P132 BE132S4**	**S501_1.4 P132 BX132S4**	495
1071	48	1.2	1.4	1660	**S401_1.4 S4 ME4SB4**	**S401_1.4 S4 MX4SB4**	492	**S401_1.4 P132 BE132S4**	**S401_1.4 P132 BX132S4**	493
1215	42	2.4	2.4	2370	**S501_2.4 S4 ME4SB2**		494	**S501_2.4 P132 BE132SA2**		495
1223	42	1.7	2.4	1640	**S401_2.4 S4 ME4SB2**		492	**S401_2.4 P132 BE132SA2**		493
1580	33	1.5	1.9	1530	**S401_1.9 S4 ME4SB2**		492	**S401_1.9 P132 BE132SA2**		493
1636	31	2.7	1.8	2170	**S501_1.8 S4 ME4SB2**		494	**S501_1.8 P132 BE132SA2**		495
2058	25	3.4	1.4	2030	**S501_1.4 S4 ME4SB2**		494	**S501_1.4 P132 BE132SA2**		495
2145	24	2.0	1.4	1410	**S401_1.4 S4 ME4SB2**		492	**S401_1.4 P132 BE132SA2**		493

7.5 kW

n_2 min-1	M_2 Nm	S	i	R_{n2} N	IE2	IE3		IEC IE2	IEC IE3	
478	146	1.0	3.0	2810	**S501_3.0 S4 ME4LA4**	**S501_3.0 S4 MX4LA4**	494	**S501_3.0 P132 BE132MA4**	**S501_3.0 P132 BX132MA4**	495
540	130	1.0	1.8	2690	**S501_1.8 S5 ME5SB6**		494	**S501_1.8 P160 BE160MB6**		495
604	116	1.1	2.4	2670	**S501_2.4 S4 ME4LA4**	**S501_2.4 S4 MX4LA4**	494	**S501_2.4 P132 BE132MA4**	**S501_2.4 P132 BX132MA4**	495
679	103	1.2	1.4	2560	**S501_1.4 S5 ME5SB6**		494	**S501_1.4 P160 BE160MB6**		495
761	92	1.3	3.8	2570	**S501_3.8 S4 ME4LA2**		494	**S501_3.8 P132 BE132SB2**		495
814	86	1.3	1.8	2490	**S501_1.8 S4 ME4LA4**	**S501_1.8 S4 MX4LA4**	494	**S501_1.8 P132 BE132MA4**	**S501_1.8 P132 BX132MA4**	495
958	73	1.0	3.1	1610	**S401_3.1 S4 ME4LA2**		492	**S401_3.1 P132 BE132SB2**		493
961	73	1.5	3.0	2440	**S501_3.0 S4 ME4LA2**		494	**S501_3.0 P132 BE132SB2**		495
1024	68	1.6	1.4	2350	**S501_1.4 S4 ME4LA4**	**S501_1.4 S4 MX4LA4**	494	**S501_1.4 P132 BE132MA4**	**S501_1.4 P132 BX132MA4**	495
1067	65	0.9	1.4	1540	**S401_1.4 S4 ME4LA4**	**S401_1.4 S4 MX4LA4**	492	**S401_1.4 P132 BE132MA4**	**S401_1.4 P132 BX132MA4**	493
1215	58	1.7	2.4	2290	**S501_2.4 S4 ME4LA2**		494	**S501_2.4 P132 BE132SB2**		495
1223	57	1.2	2.4	1540	**S401_2.4 S4 ME4LA2**		492	**S401_2.4 P132 BE132SB2**		493
1580	44	1.1	1.9	1450	**S401_1.9 S4 ME4LA2**		492	**S401_1.9 P132 BE132SB2**		493
1636	43	2.0	1.8	2110	**S501_1.8 S4 ME4LA2**		494	**S501_1.8 P132 BE132SB2**		495
2058	34	2.5	1.4	1980	**S501_1.4 S4 ME4LA2**		494	**S501_1.4 P132 BE132SB2**		495
2145	33	1.5	1.4	1350	**S401_1.4 S4 ME4LA2**		492	**S401_1.4 P132 BE132SB2**		493

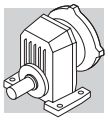

9.2 kW

n_2 min-1	M_2 Nm	S	i	R_{n2} N	IE2	IE3		IEC IE2	IEC IE3	
602	144	0.9	2.4	2530	**S501_2.4 S4 ME4LB4**	**S501_2.4 S5 MX5SA4**	494	**S501_2.4 P132 BE132MB4**	**S501_2.4 P160 BX160MA4**	495
760	113	1.1	3.8	2470	**S501_3.8 S4 ME4LB2**		494	**S501_3.8 P132 BE132MB2**		495
811	107	1.0	1.8	2390	**S501_1.8 S4 ME4LB4**	**S501_1.8 S5 MX5SA4**	494	**S501_1.8 P132 BE132MB4**	**S501_1.8 P160 BX160MA4**	495
959	90	1.2	3.0	2360	**S501_3.0 S4 ME4LB2**		494	**S501_3.0 P132 BE132MB2**		495
1020	85	1.3	1.4	2270	**S501_1.4 S4 ME4LB4**	**S501_1.4 S5 MX5SA4**	494	**S501_1.4 P132 BE132MB4**	**S501_1.4 P160 BX160MA4**	495
1213	71	1.4	2.4	2220	**S501_2.4 S4 ME4LB2**		494	**S501_2.4 P132 BE132MB2**		495
1221	71	1.0	2.4	1460	**S401_2.4 S4 ME4LB2**		492	**S401_2.4 P132 BE132MB2**		493
1633	53	1.6	1.8	2060	**S501_1.8 S4 ME4LB2**		494	**S501_1.8 P132 BE132MB2**		495
2055	42	2.0	1.4	1930	**S501_1.4 S4 ME4LB2**		494	**S501_1.4 P132 BE132MB2**		495
2141	40	1.2	1.4	1300	**S401_1.4 S4 ME4LB2**		492	**S401_1.4 P132 BE132MB2**		493

S 10 — 21 Nm

	i	n_1 = 2800 min-1					n_1 = 1400 min-1					
		n_2 min-1	M_{n2} Nm	P_{n1} kW	R_{n1} N	R_{n2} N	n_2 min-1	M_{n2} Nm	P_{n1} kW	R_{n1} N	R_{n2} N	
S 10 1_1.4	1.4	1972	8.0	1.7	800	310	986	10.0	1.1	800	390	487
S 10 1_1.9	1.9	1489	8.0	1.3	800	360	745	10.0	0.80	800	460	
S 10 1_2.5	2.5	1120	8.0	0.96	800	420	560	10.0	0.60	800	520	
S 10 1_3.2	3.2	875	10.0	0.93	800	440	438	12.0	0.56	800	560	
S 10 1_3.8	3.8	727	10.0	0.78	800	480	364	12.0	0.47	800	610	
S 10 1_4.7	4.7	592	10.0	0.63	800	520	296	12.0	0.38	800	660	
S 10 1_6.1	6.1	458	12.0	0.59	800	560	229	15.0	0.37	800	710	
S 10 1_6.9	6.9	406	12.0	0.52	800	580	203	15.0	0.33	800	740	
S 10 1_8.9	8.9	315	8.0	0.27	800	700	158	10.0	0.17	800	880	
S 10 1_10.3	10.3	272	8.0	0.23	800	740	136	10.0	0.15	800	930	
S 10 1_12.3	12.3	227	8.0	0.19	800	800	114	10.0	0.12	800	1000	

	i	n_1 = 900 min-1					n_1 = 500 min-1					
		n_2 min-1	M_{n2} Nm	P_{n1} kW	R_{n1} N	R_{n2} N	n_2 min-1	M_{n2} Nm	P_{n1} kW	R_{n1} N	R_{n2} N	
S 10 1_1.4	1.4	634	12.0	0.81	800	450	352	14.0	0.53	800	560	487
S 10 1_1.9	1.9	479	12.0	0.61	800	520	266	14.0	0.40	800	640	
S 10 1_2.5	2.5	360	12.0	0.46	800	600	200	14.0	0.30	800	740	
S 10 1_3.2	3.2	281	14.0	0.42	800	650	156	17.0	0.28	800	790	
S 10 1_3.8	3.8	234	14.0	0.35	800	700	130	17.0	0.24	800	850	
S 10 1_4.7	4.7	190	14.0	0.28	800	770	106	17.0	0.19	800	930	
S 10 1_6.1	6.1	147	17.0	0.27	800	820	82	21	0.18	800	1000	
S 10 1_6.9	6.9	130	17.0	0.24	800	860	72	21	0.16	800	1040	
S 10 1_8.9	8.9	101	12.0	0.13	800	1020	56	14.0	0.08	800	1200	
S 10 1_10.3	10.3	87	12.0	0.11	800	1080	49	14.0	0.07	800	1200	
S 10 1_12.3	12.3	73	12.0	0.09	800	1160	41	14.0	0.06	800	1200	

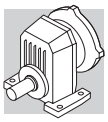

S 20 — 37 Nm

	i	n_1 = 2800 min^{-1}					n_1 = 1400 min^{-1}					
		n_2 min^{-1}	M_{n2} Nm	P_{n1} kW	R_{n1} N	R_{n2} N	n_2 min^{-1}	M_{n2} Nm	P_{n1} kW	R_{n1} N	R_{n2} N	
S 20 1_1.4	1.4	2014	13.0	2.8	1000	590	1007	17.0	1.8	1000	740	489
S 20 1_1.9	1.9	1481	13.0	2.1	1000	680	741	17.0	1.3	1000	860	
S 20 1_2.4	2.4	1148	21	2.6	640	680	574	26	1.6	850	860	
S 20 1_3.1	3.1	900	21	2.0	730	750	450	26	1.3	960	950	
S 20 1_3.9	3.9	712	21	1.6	820	840	356	26	0.99	1000	1060	
S 20 1_4.8	4.8	587	21	1.3	910	920	294	26	0.82	1000	1160	
S 20 1_5.8	5.8	481	21	1.1	960	1000	241	26	0.67	1000	1260	
S 20 1_7.2	7.2	388	21	0.87	980	1090	194	26	0.54	1000	1370	
S 20 1_8.5	8.5	329	13.0	0.46	1000	1240	165	17.0	0.30	1000	1500	
S 20 1_10.8	10.8	260	13.0	0.36	1000	1350	130	17.0	0.24	1000	1500	
S 20 1_12.4	12.4	225	13.0	0.31	1000	1430	113	17.0	0.20	1000	1500	

	i	n_1 = 900 min^{-1}					n_1 = 500 min^{-1}					
		n_2 min^{-1}	M_{n2} Nm	P_{n1} kW	R_{n1} N	R_{n2} N	n_2 min^{-1}	M_{n2} Nm	P_{n1} kW	R_{n1} N	R_{n2} N	
S 20 1_1.4	1.4	647	20	1.4	1000	850	360	24	0.92	1000	1040	489
S 20 1_1.9	1.9	476	20	1.0	1000	990	265	24	0.68	1000	1210	
S 20 1_2.4	2.4	369	30	1.2	990	990	205	37	0.81	1000	1200	
S 20 1_3.1	3.1	289	30	0.93	1000	1110	161	37	0.64	1000	1340	
S 20 1_3.9	3.9	229	30	0.73	1000	1230	127	37	0.50	1000	1490	
S 20 1_4.8	4.8	189	30	0.60	1000	1350	105	37	0.41	1000	1500	
S 20 1_5.8	5.8	155	30	0.50	1000	1460	86	37	0.34	1000	1500	
S 20 1_7.2	7.2	125	30	0.40	1000	1500	69	37	0.27	1000	1500	
S 20 1_8.5	8.5	106	20	0.23	1000	1500	59	24	0.15	1000	1500	
S 20 1_10.8	10.8	84	20	0.18	1000	1500	47	24	0.12	1000	1500	
S 20 1_12.4	12.4	72	20	0.15	1000	1500	40	24	0.10	1000	1500	

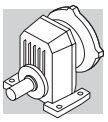

S 30 — 70 Nm

	i	n_1 = 2800 min^{-1}					n_1 = 1400 min^{-1}					
		n_2 min^{-1}	M_{n2} Nm	P_{n1} kW	R_{n1} N	R_{n2} N	n_2 min^{-1}	M_{n2} Nm	P_{n1} kW	R_{n1} N	R_{n2} N	
S 30 1_1.4	1.4	1986	24	5.1	1500	770	993	30	3.2	1500	970	491
S 30 1_1.8	1.8	1530	24	3.9	1500	870	765	30	2.5	1500	1090	
S 30 1_2.4	2.4	1157	40	4.9	1270	850	579	50	3.1	1500	1070	
S 30 1_3.1	3.1	915	40	3.9	1470	950	458	50	2.4	1500	1200	
S 30 1_3.9	3.9	711	40	3.0	1500	1070	355	50	1.9	1500	1360	
S 30 1_4.9	4.9	568	40	2.4	1500	1190	284	50	1.5	1500	1500	
S 30 1_5.8	5.8	479	40	2.0	1500	1280	239	50	1.3	1500	1610	
S 30 1_7.1	7.1	395	40	1.7	1500	1390	197	50	1.1	1500	1750	
S 30 1_8.9	8.9	315	24	0.81	1500	1650	157	30	0.50	1500	2080	
S 30 1_10.3	10.3	272	24	0.70	1500	1740	136	30	0.44	1500	2190	
S 30 1_13.1	13.1	213	24	0.55	1500	1900	107	30	0.34	1500	2400	

	i	n_1 = 900 min^{-1}					n_1 = 500 min^{-1}					
		n_2 min^{-1}	M_{n2} Nm	P_{n1} kW	R_{n1} N	R_{n2} N	n_2 min^{-1}	M_{n2} Nm	P_{n1} kW	R_{n1} N	R_{n2} N	
S 30 1_1.4	1.4	638	35	2.4	1500	1120	355	42	1.6	1500	1360	491
S 30 1_1.8	1.8	492	35	1.8	1500	1260	273	42	1.2	1500	1540	
S 30 1_2.4	2.4	372	58	2.3	1500	1240	207	70	1.5	1500	1510	
S 30 1_3.1	3.1	294	58	1.8	1500	1390	163	70	1.2	1500	1700	
S 30 1_3.9	3.9	228	58	1.4	1500	1570	127	70	0.95	1500	1920	
S 30 1_4.9	4.9	183	58	1.1	1500	1740	101	70	0.76	1500	2120	
S 30 1_5.8	5.8	154	58	0.95	1500	1870	85	70	0.64	1500	2280	
S 30 1_7.1	7.1	127	58	0.79	1500	2030	71	62	0.47	1500	2400	
S 30 1_8.9	8.9	101	35	0.38	1500	2400	56	42	0.25	1500	2400	
S 30 1_10.3	10.3	87	35	0.33	1500	2400	49	42	0.22	1500	2400	
S 30 1_13.1	13.1	69	35	0.26	1500	2400	38	37	0.15	1500	2400	

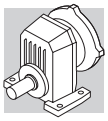

S 40 — 125 Nm

	i	n_1 = 2800 min^{-1}					n_1 = 1400 min^{-1}					
		n_2 min^{-1}	M_{n2} Nm	P_{n1} kW	R_{n1} N	R_{n2} N	n_2 min^{-1}	M_{n2} Nm	P_{n1} kW	R_{n1} N	R_{n2} N	
S 40 1_1.4	1.4	2059	48	10.6	2000	1270	1029	60	6.6	2000	1600	493
S 40 1_1.9	1.9	1514	48	7.8	2000	1450	757	60	4.9	2000	1830	
S 40 1_2.4	2.4	1172	70	8.8	1860	1490	586	90	5.6	2000	1870	
S 40 1_3.1	3.1	918	70	6.9	2000	1660	459	90	4.4	2000	2080	
S 40 1_3.8	3.8	735	70	5.5	2000	1830	367	90	3.5	2000	2290	
S 40 1_4.8	4.8	580	70	4.3	2000	2020	290	90	2.8	2000	2530	
S 40 1_6.1	6.1	461	70	3.5	2000	2220	231	90	2.2	2000	2790	
S 40 1_7.2	7.2	392	63	2.6	2000	2410	196	80	1.7	2000	3030	
S 40 1_8.6	8.6	324	48	1.7	2000	2670	162	60	1.0	2000	3370	
S 40 1_10.7	10.7	262	40	1.1	2000	2930	131	50	0.70	2000	3690	
S 40 1_12.4	12.4	226	40	1.0	2000	3100	113	50	0.60	2000	3800	

	i	n_1 = 900 min^{-1}					n_1 = 500 min^{-1}					
		n_2 min^{-1}	M_{n2} Nm	P_{n1} kW	R_{n1} N	R_{n2} N	n_2 min^{-1}	M_{n2} Nm	P_{n1} kW	R_{n1} N	R_{n2} N	
S 40 1_1.4	1.4	662	70	4.9	2000	1850	368	85	3.3	2000	2250	493
S 40 1_1.9	1.9	486	70	3.6	2000	2120	270	85	2.5	2000	2580	
S 40 1_2.4	2.4	377	105	4.2	2000	2160	209	125	2.8	2000	2650	
S 40 1_3.1	3.1	295	105	3.3	2000	2400	164	125	2.2	2000	2940	
S 40 1_3.8	3.8	236	105	2.7	2000	2650	131	125	1.8	2000	3240	
S 40 1_4.8	4.8	186	105	2.1	2000	2930	104	125	1.4	2000	3580	
S 40 1_6.1	6.1	148	105	1.7	2000	3220	82	110	1.0	2000	3800	
S 40 1_7.2	7.2	126	90	1.2	2000	3530	70	90	0.67	2000	3800	
S 40 1_8.6	8.6	104	70	0.78	2000	3800	58	85	0.53	2000	3800	
S 40 1_10.7	10.7	84	58	0.52	2000	3800	47	70	0.35	2000	3800	
S 40 1_12.4	12.4	73	58	0.45	2000	3800	40	70	0.30	2000	3800	

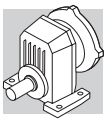

S 50 — 200 Nm

	i	n_1 = 2800 min^{-1}					n_1 = 1400 min^{-1}					
		n_2 min^{-1}	M_{n2} Nm	P_{n1} kW	R_{n1} N	R_{n2} N	n_2 min^{-1}	M_{n2} Nm	P_{n1} kW	R_{n1} N	R_{n2} N	
S 50 1_1.4	1.4	1972	85	17.9	730	1720	986	110	11.6	730	2150	495
S 50 1_1.8	1.8	1564	85	14.2	1220	1920	782	110	9.2	1370	2400	
S 50 1_2.4	2.4	1162	100	12.4	930	2110	581	130	8.1	970	2640	
S 50 1_3.0	3.0	921	110	10.8	860	2300	461	140	6.9	1020	2880	
S 50 1_3.8	3.8	729	120	9.3	640	2480	365	150	5.8	860	3130	
S 50 1_4.8	4.8	589	120	7.6	880	2710	295	150	4.7	1160	3420	
S 50 1_6.1	6.1	462	100	4.9	1980	3100	231	130	3.2	2330	3880	
S 50 1_7.4	7.4	378	100	4.0	2060	3340	189	130	2.6	2400	4190	
S 50 1_8.8	8.8	319	85	2.9	2400	3640	160	110	1.9	2400	4570	
S 50 1_10.5	10.5	268	85	2.4	2400	3880	134	110	1.6	2400	4870	
S 50 1_12.9	12.9	217	80	1.9	2400	4200	109	100	1.2	2400	5300	

	i	n_1 = 900 min^{-1}					n_1 = 500 min^{-1}					
		n_2 min^{-1}	M_{n2} Nm	P_{n1} kW	R_{n1} N	R_{n2} N	n_2 min^{-1}	M_{n2} Nm	P_{n1} kW	R_{n1} N	R_{n2} N	
S 50 1_1.4	1.4	634	125	8.5	1010	2510	352	155	5.8	1040	3040	495
S 50 1_1.8	1.8	503	125	6.7	1730	2790	279	155	4.6	1940	3380	
S 50 1_2.4	2.4	373	150	6.0	1160	3060	207	180	4.0	1530	3730	
S 50 1_3.0	3.0	296	160	5.1	1290	3350	164	200	3.5	1310	4050	
S 50 1_3.8	3.8	234	175	4.4	940	3620	130	200	2.8	1740	4460	
S 50 1_4.8	4.8	189	175	3.5	1290	3960	105	180	2.0	2400	4970	
S 50 1_6.1	6.1	149	150	2.4	2400	4500	83	150	1.3	2400	5620	
S 50 1_7.4	7.4	122	140	1.8	2400	4900	68	140	1.0	2400	6100	
S 50 1_8.8	8.8	103	125	1.4	2400	5310	57	125	0.80	2400	6580	
S 50 1_10.5	10.5	86	115	1.1	2400	5700	48	115	0.60	2400	7050	
S 50 1_12.9	12.9	70	100	0.70	2400	6210	39	100	0.40	2400	7200	

79 ANBAUMÖGLICHKEITEN

In den Tabellen (E68) und (E69) werden die von den Größen her gesehenen Anbaumöglichkeiten angegeben.

Die angemessene Getriebewahl muss unter Befolgung der im Paragraph 11 gegebenen Anleitungen und auf der Grundlage der Auswahltabelle der technischen Daten erfolgen.

(E 68)

		IEC_ BN BE BX (IM B5)																		
		BN		BN	BE	BN	BE	BN	BE	BN	BE	BN	BE	BX	BN	BE	BX	BN	BE	BX
P_{n1}(#) [kW]	2p	0.37	0.75	1.5	1.1	2.2	2.2	4	3	4	4	9.2	9.2	—	18.5	18.5	—	22	—	—
	4p	0.25	0.55	1.1	0.75	1.85	1.5	3	3	4	4	9.2	9.2	7.5	15	15	15	22	22	22
	6p	0.12	0.37	0.75	—	1.1	0.75	1.85	1.5	2.2	2.2	5.5	4	—	11	7.5	—	15	—	—

		P63	P71	P80	P90	P100	P112	P132	P160	P180
S 10 1	i =	1.4_12.3	1.4_12.3	1.4_8.9	1.4_8.9	1.4_8.9	1.4_8.9			
S 20 1		1.9_12.4	1.9_12.4	1.4_10.8	1.4_10.8	1.4_10.8	1.4_10.8			
S 30 1		2.4_13.1	2.4_13.1	1.4_13.1	1.4_13.1	1.4_13.1	1.4_13.1	1.4_4.9		
S 40 1		3.1_12.4	3.1_12.4	1.4_12.4	1.4_12.4	1.4_12.4	1.4_12.4	1.4_6.1		
S 50 1		3.8_12.9	3.8_12.9	1.4_12.9	1.4_12.9	1.4_12.9	1.4_12.9	1.4_7.4	1.4_7.4	1.4_7.4

(#) P_{n1} = max. installierbare Leistung für IEC Motoradapter P_

(E 69)

		M	ME	MX			
		M05	M1	M2 - ME2	ME3	ME4 - MX4	ME5 - MX5
S 10 1	i =	1.4_12.3	1.4_6.9	1.4_8.9	1.4_8.9		
S 20 1		1.9_12.4	1.9_8.5	1.4_10.8	1.4_10.8		
S 30 1			2.4_10.3	1.4_13.1	1.4_13.1	1.4_4.9	
S 40 1			3.1_12.4	1.4_12.4	1.4_12.4	1.4_6.1	
S 50 1			3.8_12.9	1.4_12.9	1.4_12.9	1.4_7.4	1.4_7.4

80 TRÄGHEITSMOMENT

Die In den folgenden Tabellen angegebenen Trägheitsmomente Jr [kgm2] beziehen sich auf die Getriebeantriebsachse. Um das Lesen der Tabellen zu erleichtern, werden folgende Symbole verwendet:

	Kompaktgetriebe ohne Motor. In diesem Fall muß man, um das Gesamtträgheitsmoment des Getriebemotors zu erhalten, den dem Kompaktgetriebe mit der gewählten Übersetzung entsprechenden Wert mit dem Wert des anzuschließenden Motors addieren (dieser Wert kann den Elektromotorenauswahltabellen entnommen werden).
IEC	Nur Getriebe vorbereitet für IEC-Motor (IEC-Größe...).
	Dieses Symbol bezieht sich auf Getriebewerte.

S 10

	i	J (•10-4) [kgm2]							
			IEC						
			63	71	80	90	100	112	
S 10 1_1.4	1.4	0.33	1.8	1.8	3.2	3.1	4.4	4.4	1.2
S 10 1_1.9	1.9	0.22	1.7	1.7	3.1	3.0	4.3	4.3	1.1
S 10 1_2.5	2.5	0.16	1.6	1.6	3.0	2.9	4.2	4.2	1.0
S 10 1_3.2	3.2	0.10	1.6	1.6	3.0	2.9	4.2	4.2	0.97
S 10 1_3.9	3.9	0.08	1.5	1.5	2.9	2.9	4.2	4.2	0.95
S 10 1_4.7	4.7	0.06	1.5	1.5	2.9	2.8	4.1	4.1	0.93
S 10 1_6.1	6.1	0.04	1.5	1.5	2.9	2.8	4.1	4.1	0.92
S 10 1_6.9	6.9	0.03	1.5	1.5	2.9	2.8	4.1	4.1	0.91
S 10 1_8.9	8.9	0.02	1.5	1.5	2.9	2.8	4.1	4.1	0.90
S 10 1_10.3	10.3	0.02	1.5	1.5	—	—	—	—	0.89
S 10 1_12.3	12.3	0.01	1.5	1.5	—	—	—	—	0.89

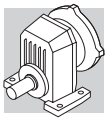

S 20

	i	J (•10-4) [kgm2]							
			IEC						
			63	71	80	90	100	112	
S 20 1_1.4	1.4	0.73	—	—	3.6	3.5	4.8	4.8	2.7
S 20 1_1.9	1.9	0.48	1.9	1.9	3.3	3.3	4.6	4.6	2.4
S 20 1_2.4	2.4	0.34	1.8	1.8	3.2	3.1	4.4	4.4	2.3
S 20 1_3.1	3.1	0.20	1.7	1.7	3.0	3.0	4.3	4.3	2.1
S 20 1_3.9	3.9	0.14	1.6	1.6	3.0	2.9	4.2	4.2	2.1
S 20 1_4.8	4.8	0.12	1.6	1.6	3.0	2.9	4.2	4.2	2.0
S 20 1_5.8	5.8	0.08	1.6	1.5	2.9	2.9	4.2	4.2	2.0
S 20 1_7.2	7.2	0.06	1.5	1.5	2.9	2.8	4.1	4.1	2.0
S 20 1_8.5	8.5	0.05	1.5	1.5	2.9	2.8	4.1	4.1	2.0
S 20 1_10.8	10.8	0.03	1.5	1.5	2.9	2.8	4.1	4.1	1.9
S 20 1_12.4	12.4	0.02	1.5	1.5	—	—	—	—	1.9

S 30

	i	J (•10-4) [kgm2]								
			IEC							
			63	71	80	90	100	112	132	
S 30 1_1.4	1.4	1.5	—	—	4.3	4.3	5.6	5.6	18	3.8
S 30 1_1.8	1.8	1.1	—	—	3.9	3.8	5.1	5.1	18	3.4
S 30 1_2.4	2.4	0.59	2.1	2.0	3.4	3.4	4.7	4.7	17	2.9
S 30 1_3.1	3.1	0.45	1.9	1.9	3.3	3.2	4.5	4.5	17	2.8
S 30 1_3.9	3.9	0.33	1.8	1.8	3.2	3.1	4.4	4.4	17	2.7
S 30 1_4.9	4.9	0.24	1.7	1.7	3.1	3.0	4.3	4.3	17	2.6
S 30 1_5.8	5.8	0.19	1.7	1.7	3.0	3.0	4.3	4.3	—	2.6
S 30 1_7.1	7.1	0.14	1.6	1.6	3.0	2.9	4.2	4.2	—	2.5
S 30 1_8.9	8.9	0.10	1.6	1.6	2.9	2.9	4.2	4.2	—	2.5
S 30 1_10.3	10.3	0.08	1.5	1.5	2.9	2.9	4.2	4.2	—	2.4
S 30 1_13.1	13.1	0.05	1.5	1.5	2.9	2.8	4.1	4.1	—	2.4

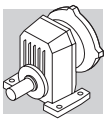

S 40

	i	J (•10-4) [kgm2]								
			IEC							
			63	71	80	90	100	112	132	
S 40 1_1.4	1.4	3.7	—	—	6.5	6.5	7.8	7.8	23	14
S 40 1_1.9	1.9	2.4	—	—	5.2	5.2	6.5	6.5	21	13
S 40 1_2.4	2.4	1.6	—	—	4.4	4.4	5.7	5.7	21	12
S 40 1_3.1	3.1	1.1	2.6	2.6	4.0	3.9	5.2	5.2	20	12
S 40 1_3.8	3.8	0.82	2.3	2.3	3.7	3.6	4.9	4.9	18	11
S 40 1_4.8	4.8	0.50	2.0	2.0	3.3	3.3	4.6	4.6	18	11
S 40 1_6.1	6.1	0.39	1.8	1.8	3.2	3.2	4.5	4.5	18	11
S 40 1_7.2	7.2	0.30	1.8	1.8	3.1	3.1	4.4	4.4	—	11
S 40 1_8.6	8.6	0.22	1.7	1.7	3.1	3.0	4.3	4.3	—	11
S 40 1_10.7	10.7	0.15	1.6	1.6	3.0	2.9	4.2	4.2	—	11
S 40 1_12.4	12.4	0.12	1.6	1.6	3.0	2.8	4.2	4.2	—	11

S 50

	i	J (•10-4) [kgm2]										
			IEC									
			63	71	80	90	100	112	132	160	180	
S 50 1_1.4	1.4	8.2	—	—	11	11	12	12	27	86	84	19
S 50 1_1.8	1.8	5.9	—	—	8.8	8.7	10	10	25	84	82	16
S 50 1_2.4	2.4	3.9	—	—	6.8	6.7	8.0	8.0	23	82	80	14
S 50 1_3.0	3.0	2.7	—	—	5.5	5.5	6.8	6.8	22	81	79	13
S 50 1_3.8	3.8	1.9	3.3	3.3	4.7	4.6	5.9	5.9	21	80	78	12
S 50 1_4.8	4.8	1.4	2.8	2.8	4.2	4.1	5.4	5.4	21	79	77	12
S 50 1_6.1	6.1	0.89	2.4	2.4	3.7	3.7	5.0	5.0	21	79	77	11
S 50 1_7.4	7.4	0.63	2.1	2.1	3.5	3.4	4.7	4.7	20	79	77	11
S 50 1_8.8	8.8	0.50	2.0	2.0	3.4	3.3	4.6	4.6	—	—	—	11
S 50 1_10.5	10.5	0.36	1.8	1.8	3.2	3.1	4.4	4.4	—	—	—	11
S 50 1_12.9	12.9	0.25	1.7	1.7	3.1	3.0	4.3	4.3	—	—	—	11

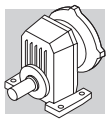

81 ABMESSUNGEN

S 10...M/ME

P

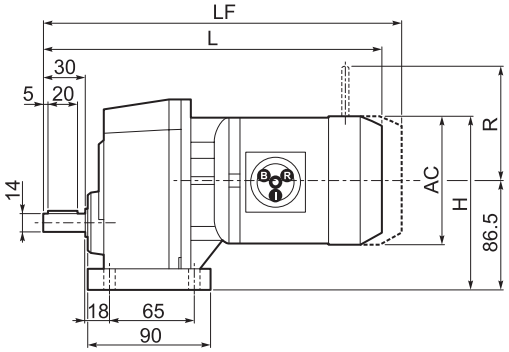

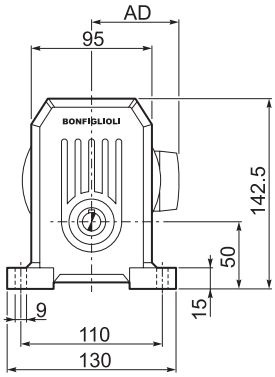

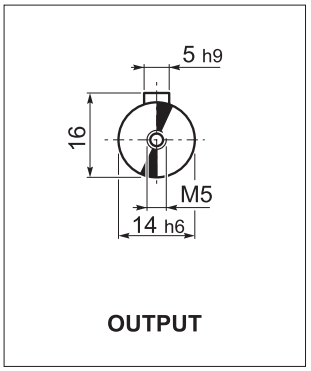

F

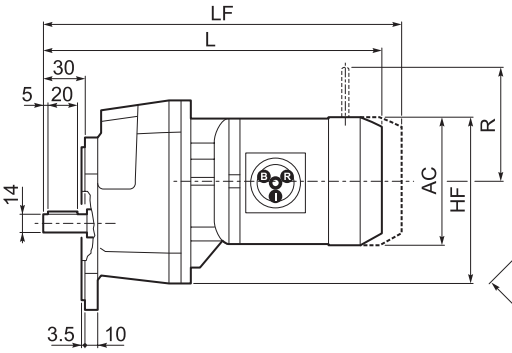

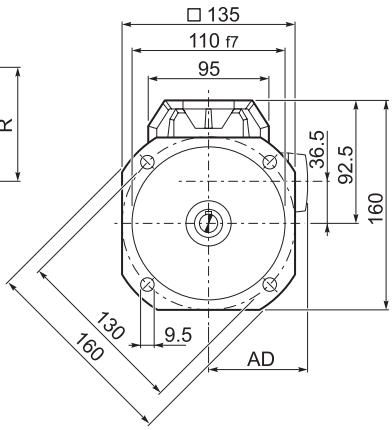

									M...FD M...FA		M...FD		M...FA	
			AC	H	HF	L	AD	Kg	LF	Kg	R	AD	R	AD
S 10 1	**S05**	**M05**	121	147	143	315	95	8	381	11	96	122	116	95
S 10 1	**S1**	**M1**	137	155	151	344	102	10	405	13	103	135	124	108
S 10 1	**S2**	**M2S**	156	164	160	367	111	13	443	17	129	146	134	119
S 10 1	**S2**	**ME2S**	156	164	160	367	111	13	—	—	—	—	—	—
S 10 1	**S3**	**ME3S**	195	184	180	416	135	20.5	—	—	—	—	—	—
S 10 1	**S3**	**ME3L**	195	184	180	448	135	21	—	—	—	—	—	—

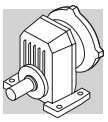

S 10...P (IEC)

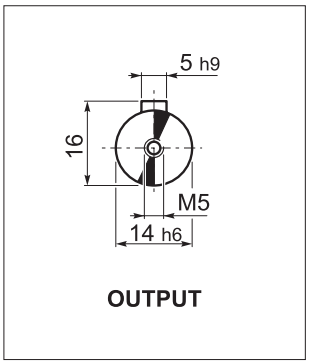

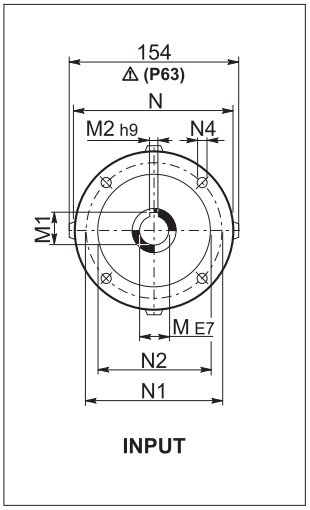

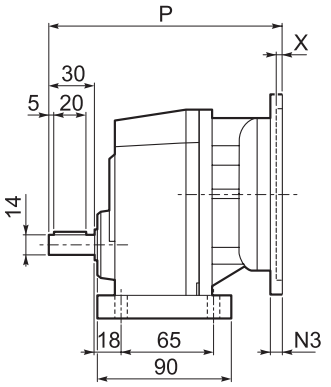

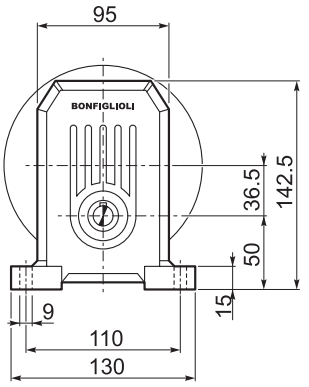

P

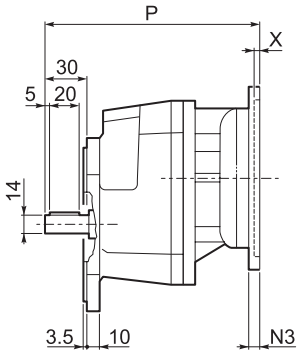

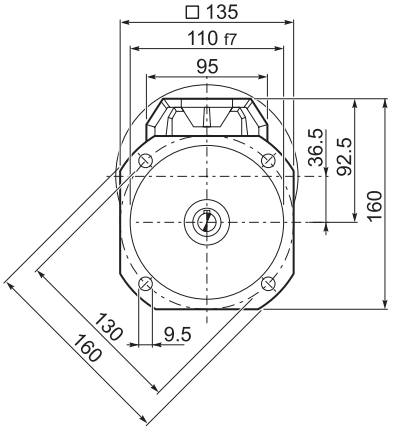

F

		M	M1	M2	N	N1	N2	N3	N4	P	X	Kg
S 10 1	**P63**	11	12.8	4	140	115	95	—	M8x10	189	4	5
S 10 1	**P71**	14	16.3	5	160	130	110	—	M8x10	189	4.5	5
S 10 1	**P80**	19	21.8	6	200	165	130	—	M10x12	208	4	6
S 10 1	**P90**	24	27.3	8	200	165	130	—	M10x12	208	4	6
S 10 1	**P100**	28	31.3	8	250	215	180	—	M12x16	218	4.5	10
S 10 1	**P112**	28	31.3	8	250	215	180	—	M12x16	218	4.5	10

S 10...HS

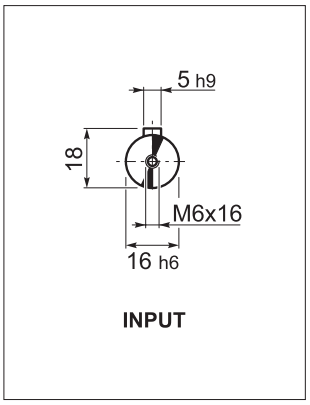

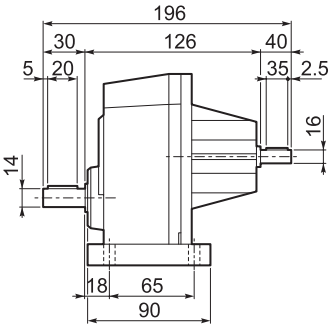

P

Kg	4.4

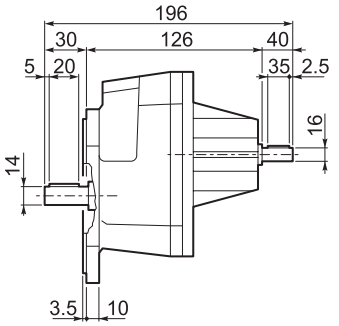

F

Kg	4.5

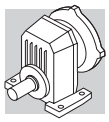

S 20...M/ME

P

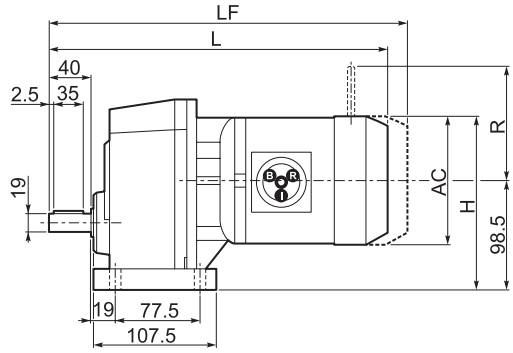

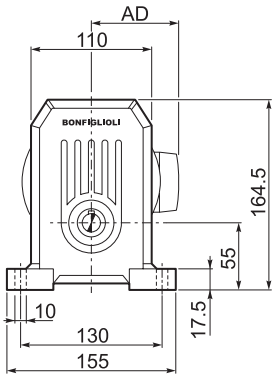

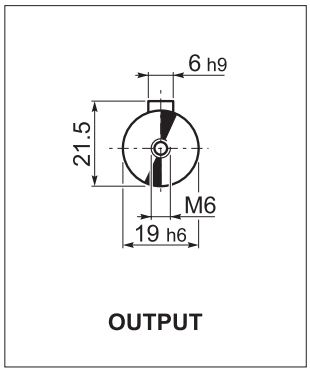

F

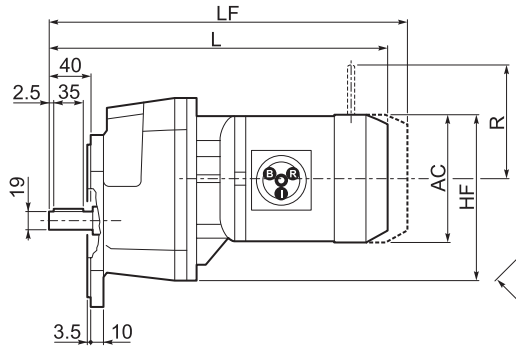

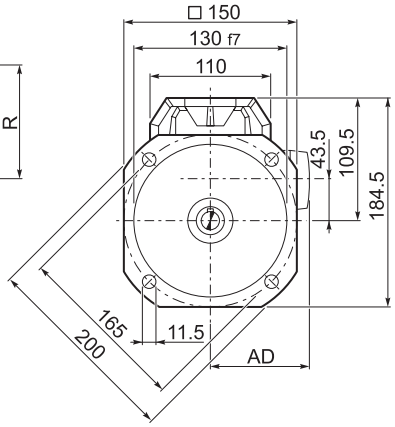

									M...FD M...FA		M...FD		M...FA	
			AC	H	HF	L	AD	Kg	LF	Kg	R	AD	R	AD
S 20 1	**S05**	**M05**	121	159	153	333.5	95	10	399.5	12	96	122	116	95
S 20 1	**S1**	**M1**	137	167	161	362.5	102	12	423.5	14	103	135	124	108
S 20 1	**S2**	**M2S**	156	176	170	385.5	111	16	461.5	19	129	146	134	119
S 20 1	**S2**	**ME2S**	156	176	170	385.5	111	16	—	—	—	—	—	—
S 20 1	**S3**	**ME3S**	195	196	190	434.5	135	21.5	—	—	—	—	—	—
S 20 1	**S3**	**ME3L**	195	196	190	466.5	135	26	—	—	—	—	—	—

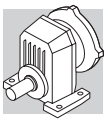

S 20...P(IEC)

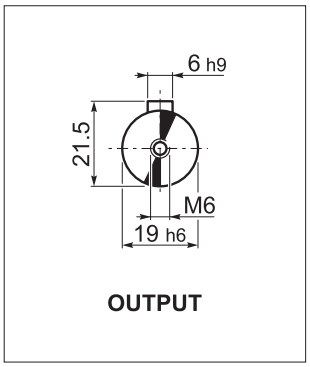

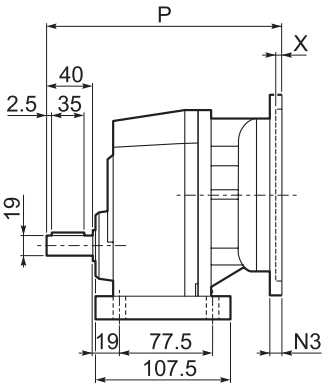

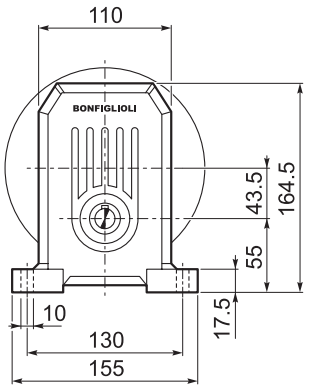

P

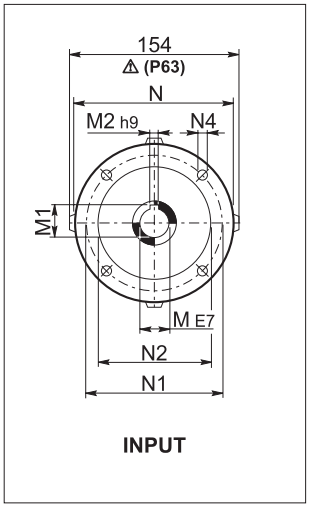

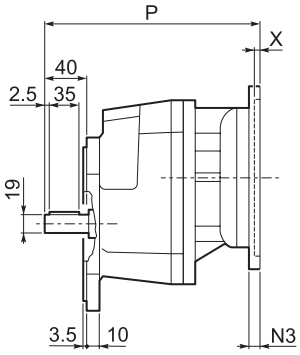

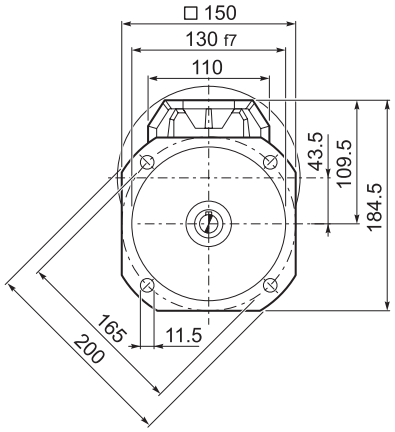

F

		M	M1	M2	N	N1	N2	N3	N4	P	X	Kg
S 20 1	**P63**	11	12.8	4	140	115	95	—	M8x10	207	4	6
S 20 1	**P71**	14	16.3	5	160	130	110	—	M8x10	207	4.5	6
S 20 1	**P80**	19	21.8	6	200	165	130	—	M10x12	227	4	7
S 20 1	**P90**	24	27.3	8	200	165	130	—	M10x12	227	4	7
S 20 1	**P100**	28	31.3	8	250	215	180	—	M12x16	237	4.5	11
S 20 1	**P112**	28	31.3	8	250	215	180	—	M12x16	237	4.5	11

S 20...HS

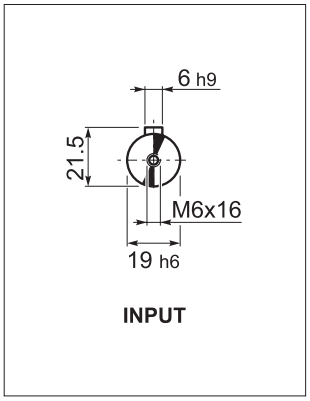

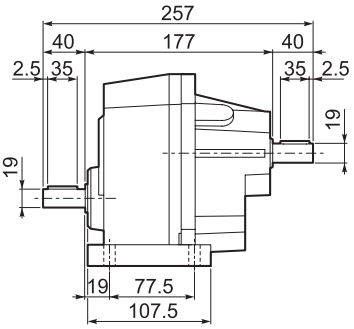

P

Kg	6.0

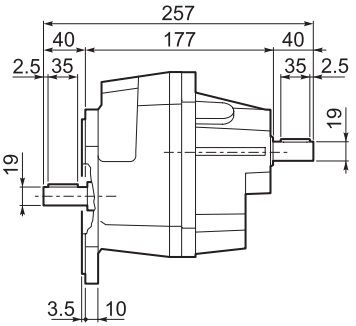

F

Kg	6.2

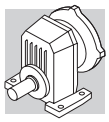

S 30...M/ME

P

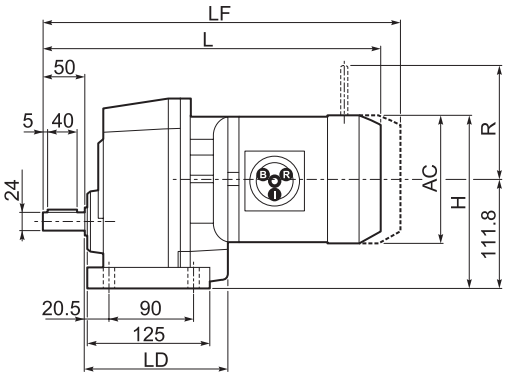

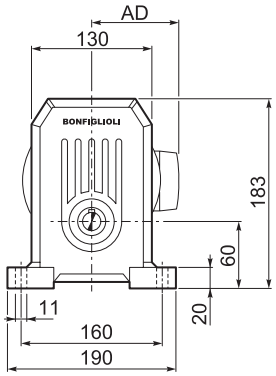

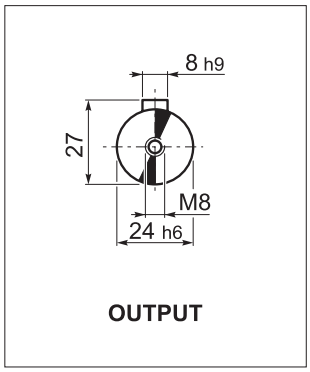

F

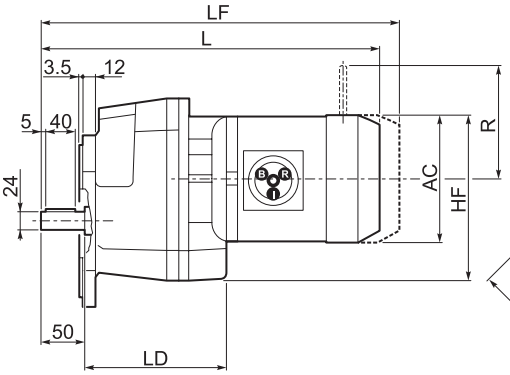

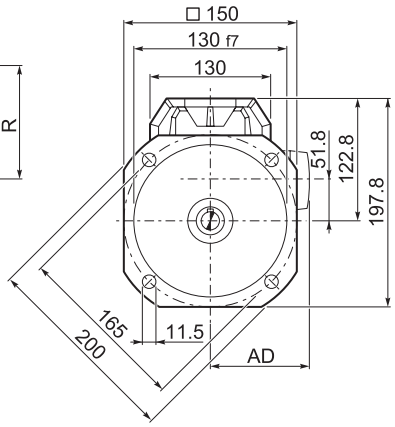

											M...FD M...FA		M...FD		M...FA	
				AC	H	HF	L	LD	AD	Kg	LF	Kg	R	AD	R	AD
S 30 1	**S1**	**M1**		137	180	177	387.5	140.5	102	14	448.5	16	103	135	124	108
S 30 1	**S2**	**MES**		156	190	186	410.5	152.5	111	18	486.5	21	129	146	134	119
S 30 1	**S2**	**ME2S**		156	190	186	410.5	152.5	111	18	—	—	—	—	—	—
S 30 1	**S3**	**ME3S**		195	209	206	459.5	162.5	135	24.5	—	—	—	—	—	—
S 30 1	**S3**	**ME3L**		195	209	206	491.5	162.5	135	32	—	—	—	—	—	—
S 30 1	**S4**	**ME4**	**MX4**	258	240.8	237	599.5	—	193	71	—	—	—	—	—	—
S 30 1	**S4**	**ME4LB**	**MX4LA**	258	240.8	237	634.5	—	193	79	—	—	—	—	—	—

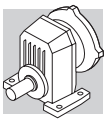

S 30...P(IEC)

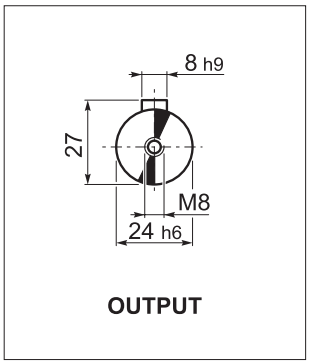

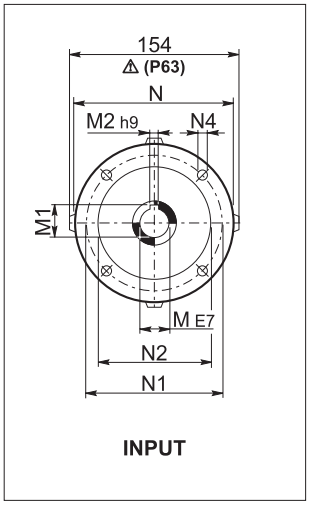

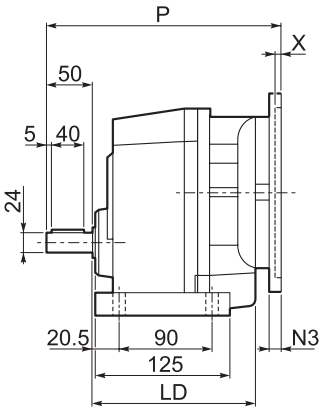

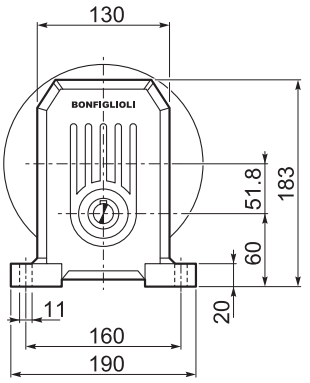

P

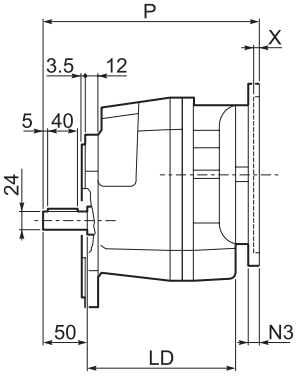

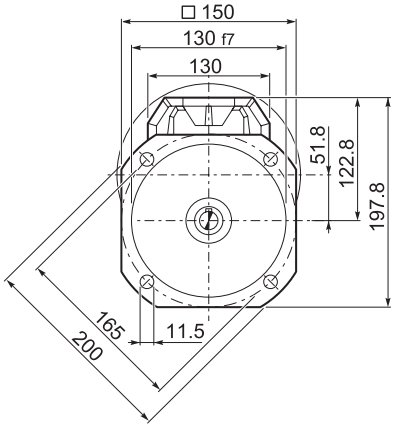

F

		LD	M	M1	M2	N	N1	N2	N3	N4	P	X	Kg
S 30 1	**P63**	152.5	11	12.8	4	140	115	95	—	M8x10	232	4	8
S 30 1	**P71**	152.5	14	16.3	5	160	130	110	—	M8x10	232	4.5	8
S 30 1	**P80**	162.5	19	21.8	6	200	165	130	—	M10x12	252	4	9
S 30 1	**P90**	162.5	24	27.3	8	200	165	130	—	M10x12	252	4	9
S 30 1	**P100**	162.5	28	31.3	8	250	215	180	—	M12x16	262	4.5	13
S 30 1	**P112**	162.5	28	31.3	8	250	215	180	—	M12x16	262	4.5	13
S 30 1	**P132**	—	38	41.3	10	300	265	230	16	14	298.5	5	21

S 30...HS

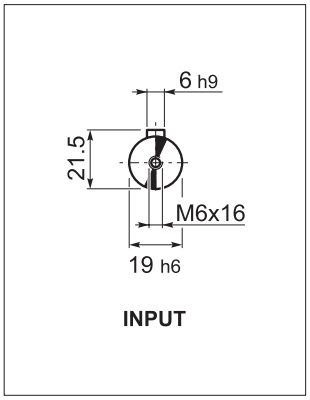

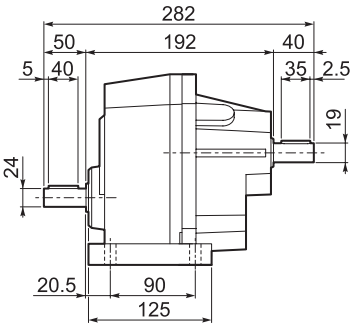

P

Kg	9.0

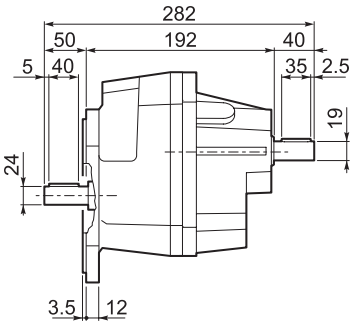

F

Kg	9.3

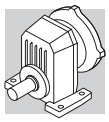

S 40...M/ME

P

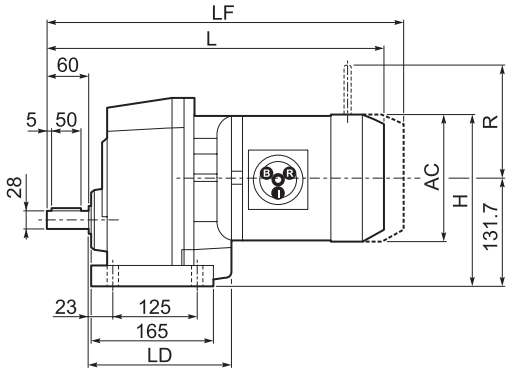

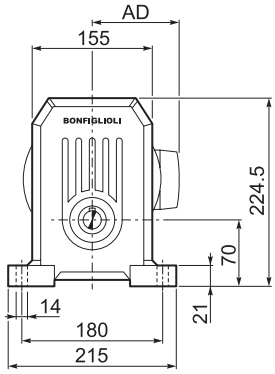

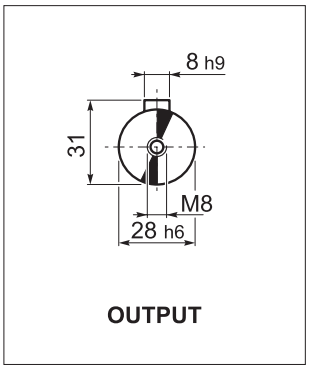

F

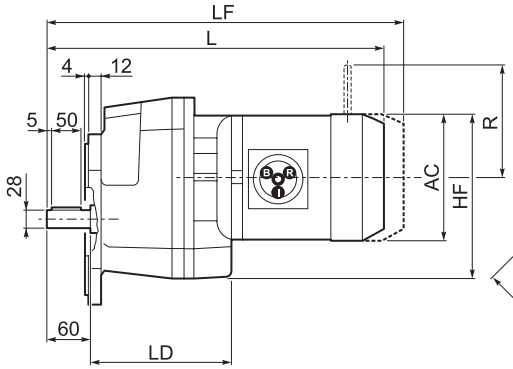

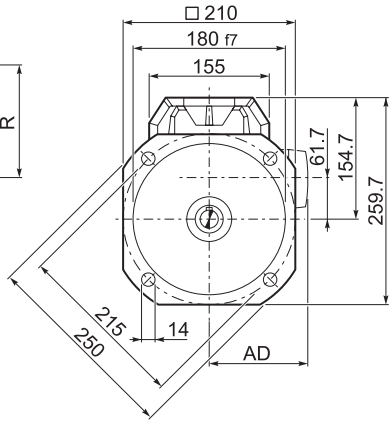

											M...FD M...FA		M...FD		M...FA	
				AC	H	HF	L	LD	AD	Kg	LF	Kg	R	AD	R	AD
S 40 1	**S1**	**M1**		137	200	197	429.5	168	102	28	490.5	31	103	135	124	108
S 40 1	**S2**	**M2S**		156	210	206	452.5	183.5	111	34	528.5	37	129	146	134	119
S 40 1	**S2**	**ME2S**		156	210	206	452.5	183.5	111	34	—	—	—	—	—	—
S 40 1	**S3**	**ME3S**		195	229	226	501.5	199.5	135	40.5	—	—	—	—	—	—
S 40 1	**S3**	**ME3L**		195	229	226	533.5	199.5	135	48	—	—	—	—	—	—
S 40 1	**S4**	**ME4**	**MX4**	258	261	257	641.5	—	193	82	—	—	—	—	—	—
S 40 1	**S4**	**ME4LB**	**MX4LA**	258	261	257	676.5	—	193	90	—	—	—	—	—	—

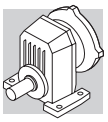

S 40...P(IEC)

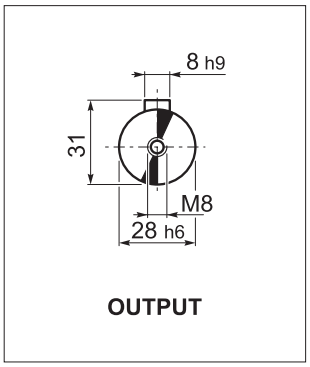

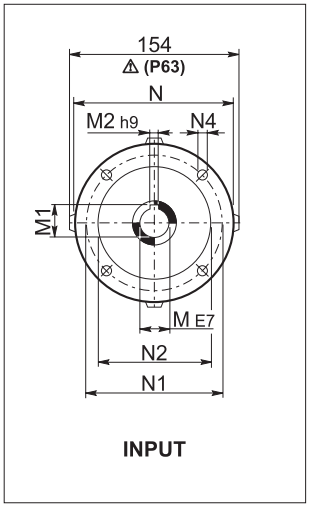

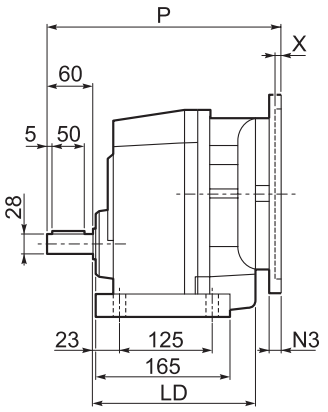

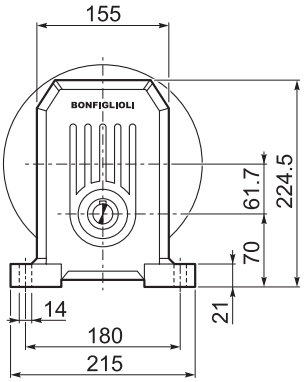

P

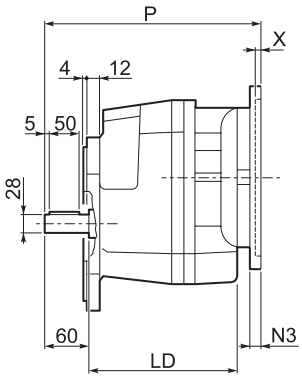

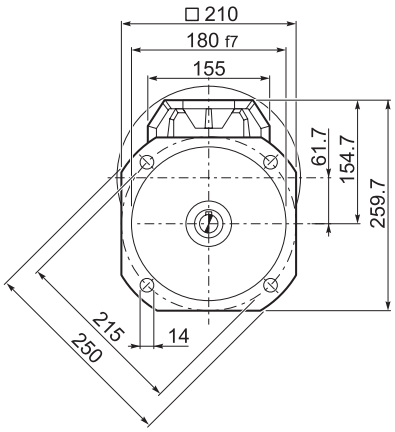

F

		LD	M	M1	M2	N	N1	N2	N3	N4	P	X	Kg
S 40 1	**P63**	183.5	11	12.8	4	140	115	95	—	M8x10	274	4	25
S 40 1	**P71**	183.5	14	16.3	5	160	130	110	—	M8x10	274	4.5	26
S 40 1	**P80**	199.5	19	21.8	6	200	165	130	—	M10x12	294	4	26
S 40 1	**P90**	199.5	24	27.3	8	200	165	130	—	M10x12	294	4	30
S 40 1	**P100**	—	28	31.3	8	250	215	180	—	M12x16	304	4.5	30
S 40 1	**P112**	—	28	31.3	8	250	215	180	—	M12x16	304	4.5	30
S 40 1	**P132**	—	38	41.3	10	300	265	230	16	14	340	5	32

S 40...HS

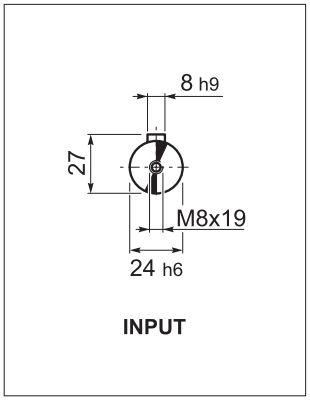

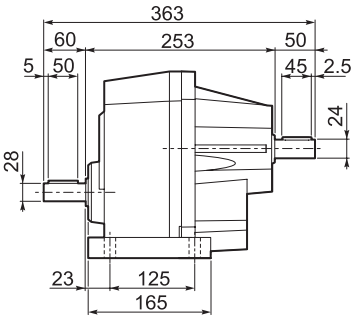

P

Kg	26.0

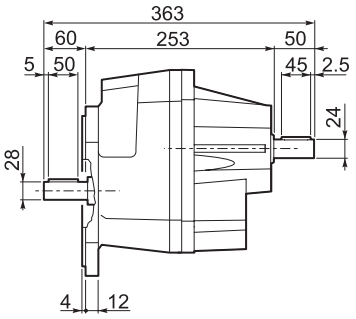

F

Kg	27.7

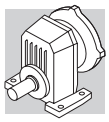

S 50...M/ME

P

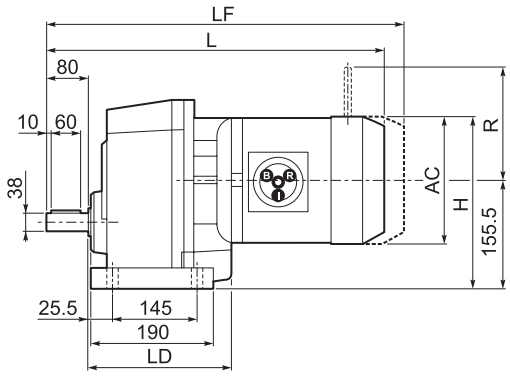

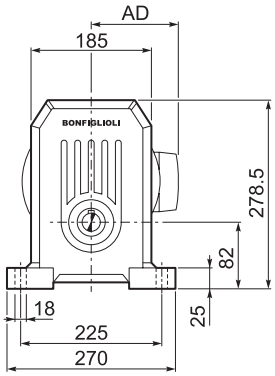

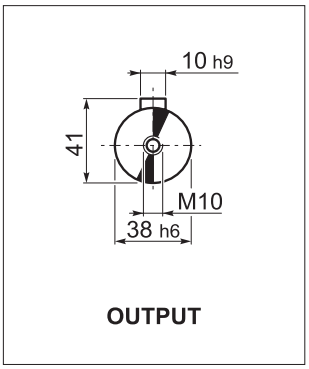

F

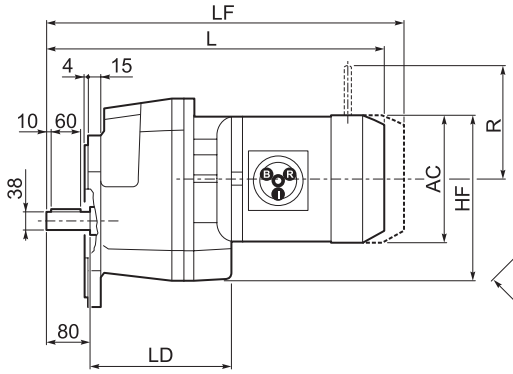

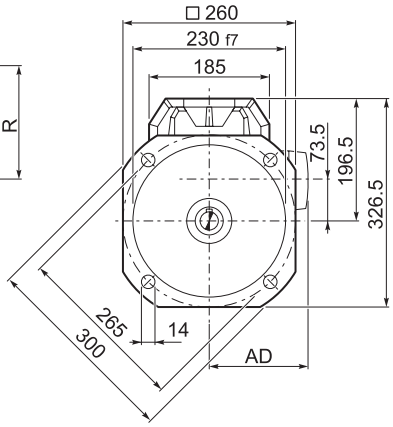

											M...FD M...FA		M...FD		M...FA	
				AC	H	HF	L	LD	AD	Kg	LF	Kg	R	AD	R	AD
S 50 1	**S1**	**M1**		137	225	222	469	—	102	40	530	42	103	135	124	108
S 50 1	**S2**	**M2S**		156	233	230	492.5	204.5	111	44	568.5	47	129	146	134	119
S 50 1	**S2**	**ME2S**		156	233	230	492.5	204.5	111	44	—	—	—	—	—	—
S 50 1	**S3**	**ME3S**		195	253	250	541.5	219.5	135	52.5	—	—	—	—	—	—
S 50 1	**S3**	**ME3L**		195	253	250	573.5	219.5	135	60	—	—	—	—	—	—
S 50 1	**S4**	**ME4**	**MX4**	258	284	281	681.5	204.5	193	86	—	—	—	—	—	—
S 50 1	**S4**	**ME4LB**	**MX4LA**	258	284	281	716.5	204.5	193	94	—	—	—	—	—	—
S 50 1	**S5**	**ME5S**	**MX5S**	310	310.5	307	768	—	245	114	—	—	—	—	—	—
S 50 1	**S5**	**ME5L**	**MX5L**	310	310.5	307	812	—	245	130	—	—	—	—	—	—

S 50...P(IEC)

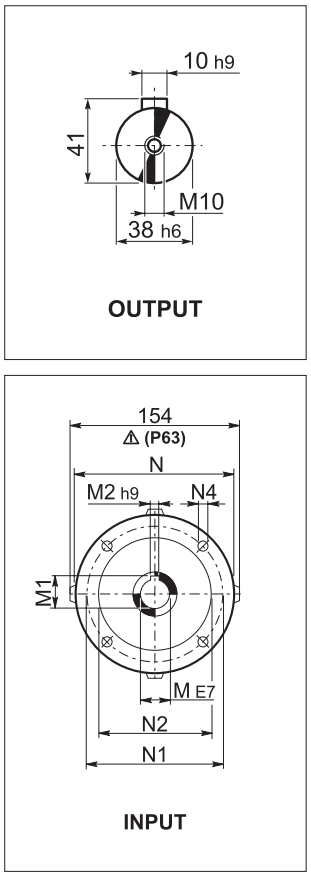

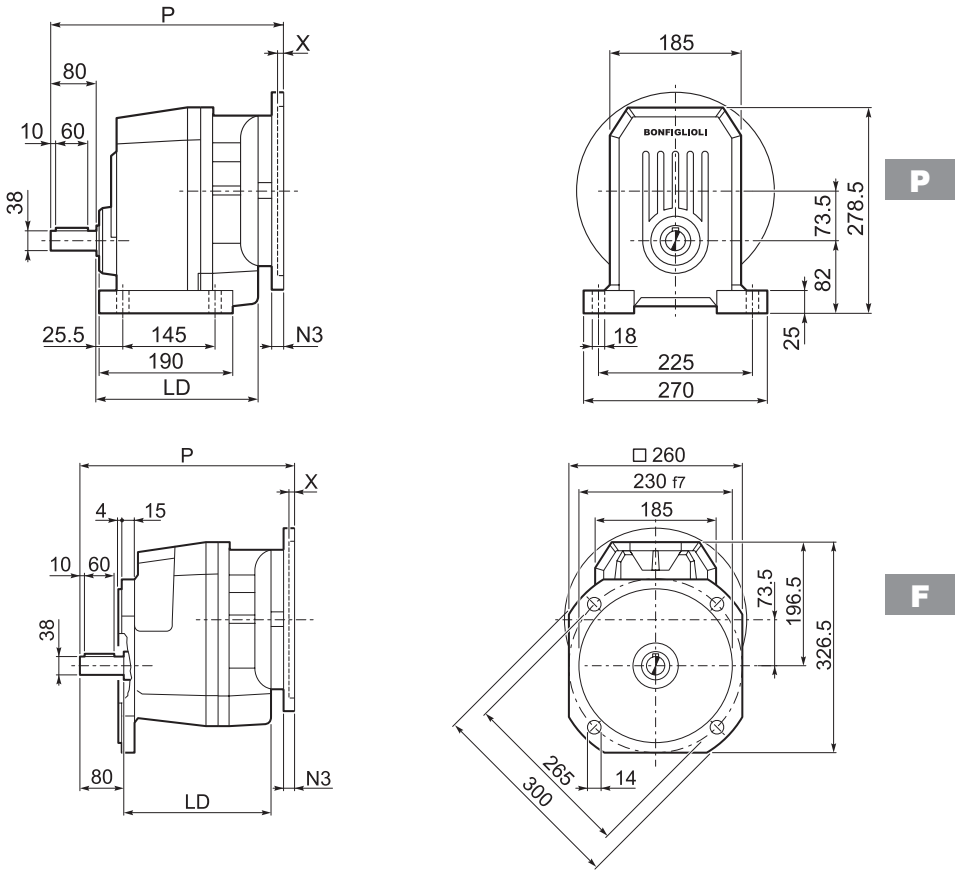

		LD	M	M1	M2	N	N1	N2	N3	N4	P	X	Kg
S 50 1	**P63**	204.5	11	12.8	4	140	115	95	—	M8x10	314	4	35
S 50 1	**P71**	204.5	14	12.8	4	160	130	110	—	M8x10	314	4.5	35
S 50 1	**P80**	219.5	19	16.3	5	200	165	130	—	M10x12	314	4	37
S 50 1	**P90**	219.5	24	21.8	6	200	165	130	—	M10x12	334	4	37
S 50 1	**P100**	204.5	28	27.3	8	250	215	180	—	M12x16	344	4.5	41
S 50 1	**P112**	204.5	28	31.3	8	250	215	180	—	M12x16	344	4.5	41
S 50 1	**P132**	204.5	38	41.3	10	300	265	230	16	14	380	5	44
S 50 1	**P160**	—	42	45.3	12	350	300	250	23	18	431	5.5	48
S 50 1	**P180**	—	48	51.8	14	350	300	250	23	18	431	5.5	48

S 50...HS

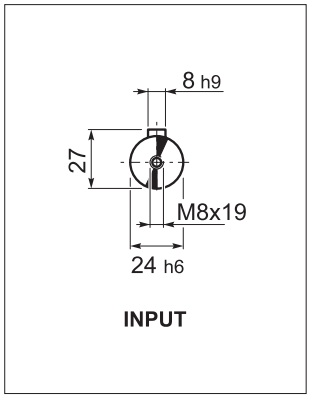

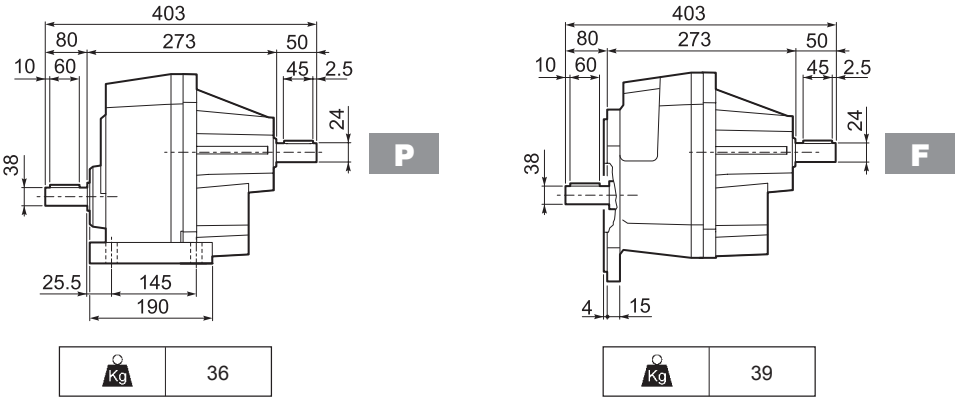

Kg	36

Kg	39

M1 SYMBOLE UND MAßEINHEITEN

Symbole	Maßeinheiten	Beschreibung
cosφ	–	Leistungsfaktor
η	–	Wirkungsgrad
f_m	–	Leistungsfaktorkorrektur
I	–	Relative Einschaltdauer
I_N	[A]	Nennstrom
I_S	[A]	Kurzschlussstrom
J_C	[Kgm^2]	Massenträgheitsmoment der Last
J_M	[Kgm^2]	Massenträgheitsmoment
K_c	–	Drehmomentfaktor
K_d	–	Lastfaktor
K_J	–	Trägheitsmomentfaktor
M_A	[Nm]	Mittleres Beschleunigungsmoment
M_B	[Nm]	Bremsmoment
M_N	[Nm]	Nennmoment
M_L	[Nm]	Mittleres Gegenmoment
M_S	[Nm]	Startmoment

Symbole	Maßeinheiten	Beschreibung
n	[min^{-1}]	Nenndrehzahl
P_B	[W]	Leistungsaufnahme der Bremse bei 20°C
P_n	[kW]	Nennleistung
P_r	[kW]	Benötigte Leistung
t_1	[ms]	Ansprechzeit Bremse mit Einweg-Gleichrichter
t_{1s}	[ms]	Ansprechzeit Bremse mit elektronisch gesteuertem Gleichrichter
t_2	[ms]	Einfallzeit Bremse bei Unterbrechung der Stromversorgung WS
t_{2c}	[ms]	Einfallzeit Bremse bei Unterbrechung der Stromversorgung WS und GS
t_a	[°C]	Umgebungstemperatur
t_f	[min]	Betriebsdauer bei gleicher Belastung
t_r	[min]	Aussetzzeit
W	[J]	Bremsenergieaufnahme zwischen zwei Nachstellungen
W_{max}	[J]	Max. Bremsarbeit pro Bremsvorgang
Z	[1/h]	Schalthäufigkeit unter Last
Z_0	[1/h]	Max. Schalthäufigkeit im Leerlauf (relative Einschaltdauer I = 50%)

Wirkungsgradklassen und Prüfverfahren
Die Wirkungsgradklassen beschreiben die Effizienz, mit der ein Elektromotor elektrische in mechanische Energie umwandelt. In Europa erfolgte die Energieklassifizierung von Niederspannungsmotoren auf freiwilliger Basis unter Bezugnahme auf die Klassen Eff1/Eff2/ Eff3. Andere Länder benutzten eigene nationale Klassifizierungssysteme, die oftmals vom europäischen System abwichen. Diese normative Unsicherheit hat die Hersteller dazu bewogen, eine internationale Harmonisierung anzustreben, die zur Ausgabe der IEC-Norm (International Electrotechnical Commission) IEC 60034-30-1, „Wirkungsgradklassen für eintourige Drehstrom-Käfigläufer-Asynchronmotoren (IE-Code)“ führte.

Die neue Norm:
- definiert die neuen Wirkungsgradklassen;
IE1 (Standard-Wirkungsgrad)
IE2 (hoher Wirkungsgrad)
IE3 (Premium-Wirkungsgrad)
- liefert einen gemeinsamen internationalen Bezug für die Klassifizierung von Elektromotoren wie auch für die gesetzgebenden Aktivitäten der Länder;
- führt ein neues Messverfahren des Wirkungsgrads in Übereinstimmung mit der Norm IEC 60034-1-2:2007 ein.

In der nachfolgenden Tabelle ist die Entsprechung zwischen den wesentlichen Klassifikationen aufgeführt.

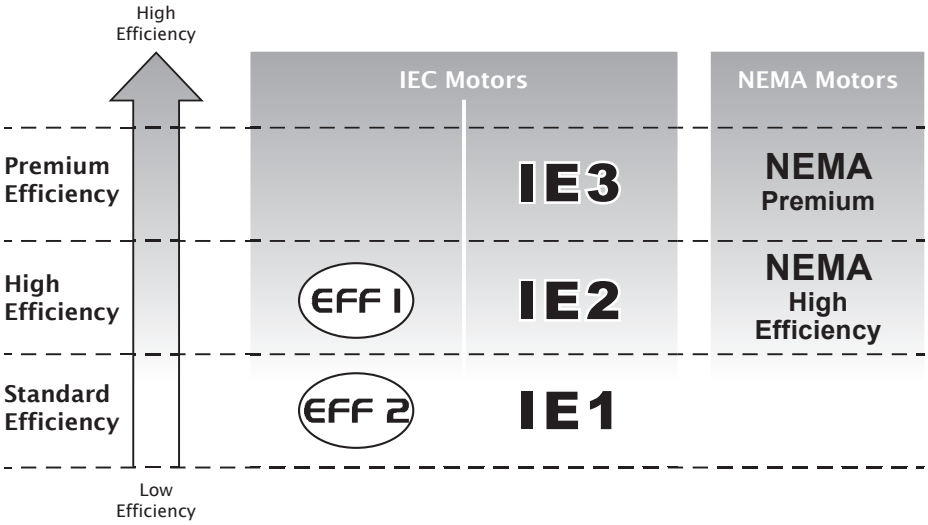

EG Verordnung Nr. 640/2009
Die Norm IEC 60034-30-1 liefert die technischen Leitlinien, bestimmt aber nicht die gesetzlichen Vorgaben bezüglich der Anforderungen für die Anwendung einer bestimmten Wirkungsgradklasse. Diese Anforderungen sind durch die Richtlinien und nationalen Gesetze spezifiziert. Die Verordnung vom 22. Juli 2009 zur Durchführung der Richtlinie 2005/32/EG legt diese Anforderungen fest, spezifiziert die Kriterien für die umweltgerechte Gestaltung der Elektromotoren und bestimmt das Wirkungsgradniveau nach folgendem Zeitplan:
▪ **16.06.2011:** Die Elektromotoren müssen mindestens der Wirkungsgradklasse **IE2** entsprechen
▪ **01.01.2015:** Die Elektromotoren mit einer Nennausgangsleistung zwischen 7.5 kW und 375 kW müssen mindestens der Wirkungsgradklasse **IE3** entsprechen, oder der Klasse **IE2**, wenn diese über einen Frequenzumrichter angesteuert werden.
▪ **01.01.2017:** Die Elektromotoren mit einer Nennausgangsleistung zwischen 0.75 kW und 375 kW müssen mindestens der Wirkungsgradklasse **IE3** entsprechen, oder der Klasse **IE2**, wenn diese über einen
Frequenzumrichter angesteuert werden.

Geltungsbereich und Ausnahmen
Die Verordnung (EG) Nr. 640/2009 gilt für eintourige 2-, 4- bzw. 6-polige Dreiphasen 50 oder 60 Hz Käfigläufer-Induktionsmotoren mit Nennausgangsleistungen zwischen 0,75 kW und 375 kW, einer Nennspannung bis 1000 V und der Auslegung für Dauerbetrieb (S1).

Diese Verordnung gilt nicht für:
- Bremsmotoren.
- Motoren, die dafür ausgelegt sind, ganz in eine Flüssigkeit eingetaucht betrieben zu werden.
- vollständig in ein Produkt (z.B. Getriebe, Pumpen, Ventilatoren) eingebaute Motoren, deren Energieeffizienz
  nicht unabhängig von diesem Produkt erfasst werden kann.
- Motoren, die speziell für den Betrieb unter folgenden Bedingungen ausgelegt sind:
▪ in Höhen über 4000 Meter über dem Meeresspiegel;
▪ bei Umgebungstemperaturen über 60 °C;
▪ bei Betriebshöchsttemperaturen über 400 °C;
▪ bei Umgebungstemperaturen unter -30 °C (beliebiger Motor) oder unter 0 °C (Wassergekühlte Motoren);
▪ bei Kühlflüssigkeitstemperaturen am Einlass eines Produkts unter 0 °C oder über 32 °C;
▪ in explosionsgefährdeten Bereichen im Sinne der Richtlinie 94/9/EG.

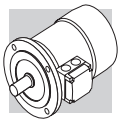

M3 ALLGEMEINE EIGENSCHAFTEN

M3.1 Produktprogramm

Die Dreiphasen-Asynchronmotoren BX, BE, BN, MX, ME und M aus dem Produktprogramm von BONFIGLIOLI RIDUTTORI gibt es in den Grundbauform IMB5 und Ableitungen mit folgenden Polzahlen: 2, 4, 6, 2/4, 2/6, 2/8 und 2/12.
Es handelt sich um Käfigläufermotoren mit Lüftern für industrielle Anwendungen.
Die BX, BE, MX, ME Motoren sind in der Standardausführung für die Nennspannungen 230/400V Δ/Y (400/690V Δ/Y für die Größen von BX/BE 160 und BX/BE 180) 50 Hz, mit einer Toleranzvon ±10% vorgesehen. Die BN/M Motoren sind in der Standardausführung für eine Nennspannung von 230/400V Δ/Y (400/690V Δ/Y für die Größen von BE 160 ... BE 200) 50 Hz, mit einer Toleranz von ±10% vorgesehen.

M3.2 Normen

Die in diesem Katalog beschriebenen Motoren sind in Übereinstimmung mit den in der folgenden Tabelle angegebenen einschlägigen Normen und Vereinheitlichungsrichtlinien konstruiert worden.

(F01)

Titel	CEI	IEC
Allgemeine Vorschriften für drehende elektrische Maschinen	**CEI EN 60034-1**	**IEC 60034-1**
Anschlussbezeichnungen und Drehrichtung von drehenden elektrischen Maschinen	**CEI 2-8**	**IEC 60034-8**
Verfahren zur Kühlung von elektrischen Maschinen	**CEI EN 60034-6**	**IEC 60034-6**
Standardisierte Abmessungen und Leistungen von drehenden elektrischen Maschinen	**EN 50347**	**IEC 60072**
Klassifizierung der Schutzart von drehenden elektrischen Maschinen	**CEI EN 60034-5**	**IEC 60034-5**
Geräuschgrenzwerte	**CEI EN 60034-9**	**IEC 60034-9**
Kennzeichnung der Bauformen, Aufstellung und Klemmkastenlage	**CEI EN 60034-7**	**IEC 60034-7**
IEC Normspannungen	**CEI 8-6**	**IEC 60038**
Mechanische Schwingungen (Verfahren und Grenzwerte) für elektrischen Maschinen	**CEI EN 60034-14**	**IEC 60034-14**
Wirkungsgradklassen der eintourigen Drehstrom-Asynchronmotoren mit Käfigläufer (IE-Code)	**CEI EN 60034-30-1**	**IEC 60034-30-1**
Genormte Testverfahren zur Bestimmung der Verluste und des Wirkungsgrads	**CEI EN 60034-2-1**	**IEC 60034-2-1**

Die Motoren entsprechen außerdem den an die IEC-Norm 60034-1 angepassten ausländischen Normen, die in der folgenden Tabelle genannt werden.

(F02)

DIN VDE 0530	Deutschland
BS5000 / BS4999	Großbritannien
AS 1359	Australien
NBNC 51 - 101	Belgien
NEK - IEC 34	Norwegen
NF C 51	Frankreich
OEVE M 10	Österreich
SEV 3009	Schweiz
NEN 3173	Niederlande
SS 426 01 01	Schweden

M3.3 Richtlinien 2006/95/EG (LVD) und 2004/108/EG (EMC)

Die Motoren der Serie BX, BE, BN, MX, ME und M entsprechen den Anforderungen der Richtlinien 2006/95/EG (Richtlinie - Niederspannung) und 2004/108/EG (Richtlinie - elektromagnetische Kompatibilität) und sind mit dem CE-Zeichen ausgestattet. Im Hinblick auf die Richtlinie EMC entspricht die Konstruktion den Normen CEI EN 60034-1, EN 61000-6-2, EN 61000-6-4.
Die Motoren mit dem Bremsentyp FD fallen, falls mit dem entsprechenden Entstörfilter am Eingang des Gleichrichters ausgestattet (Option **CF**), unter die Emissionsgrenzwerte, die von der Norm EN 61000-6-3:2007 „Elektromagnetische Kompatibilität - Allgemeine Norm für Emissionen - Teil 6-3: Wohngebiete, Handels- und Leichtindustriezonen“ vorgesehen werden. Die Motoren entsprechen darüber hinaus den von der Norm CEI EN 60204-1 „Elektrische Maschinenausstattung“ gegebenen Vorschriften.
Es liegt in der Verantwortung des Herstellers oder der Montagefirma der Ausrüstung, in der die Motoren als Komponenten montiert werden, die Sicherheit und die Übereinstimmung mit den Richtlinien des Endprodukts zu gewährleisten.

M3.4 Toleranzen

Die Normen CEI EN 60034-1, lassen die in der nachfolgenden Tabelle genannten Toleranzen für die angegeben Nennwerte zu:

(F03)

-0.15 (1 - η) P ≤ 50kW	Wirkungsgrad
-(1 - cosφ)/6 min 0.02 max 0.07	Leistungsfaktor
±20% *	Schlupf
+20%	Strom bei blockiertem Läufer
-15% +25%	Drehmoment bei blockiertem Läufer
-10%	Max. Drehmoment

(*) ± 30% für Motoren mit Pn < 1 kW

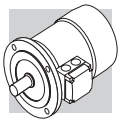

M4 VARIANTEN UND OPTIONEN

M4.1 Varianten

(F04)

Beschreibung		Standard	Option	Seite
Spannung		230/400/50		507
Schutzart	BX - BE - BN - MX - ME - M	IP 55	IP 56	504
	BN_FD - BN_FA M_FD - M_FA	IP 54	IP 55	
Isolierstoffklasse		CLF	CLH	510 511
Bauform	BX - BE - BN	**B5** **B5 R**	**B14** **B14 R**	503

Standardwerte bei Lieferung falls nicht anders spezifiziert.

M4.2 Optionen

(F05)

Beschreibung	Werte						Verfügbarkeit	Seite
Thermische Wicklungsschutz	**D3**	**K1**	**E3**				BX - BE - BN MX - ME - M	525 526
Auf 50 Hz genormte Leistung	**PN**						BN M	509
Signalrückführungen (Drehgeber)	**EN1**	**EN2**	**EN3**	**EN4**	**EN5**	**EN6**	BX - BE - BN MX - ME - M	534
Wicklungsheizung	**H1**	**NH1**					BX - BE - BN MX - ME - M	529
Tropenschutz der Motorwicklungen	**TP**						BX - BE - BN MX - ME - M	530
Zweites Wellenende	**PS**						BX - BE - BN MX - ME - M	530
Rotorauswuchtung mit Grad B	**RV**						BX - BE - BN MX - ME - M	531
Schutzdächer	**RC**	**TC**					BX - BE - BN MX - ME - M	533 534
Fremdlüfter	**U1**	**U2***					BX - BE - BN MX - ME - M	532 533
Zertifizierte Ausführung	**CUS**						BE - BN ME - M	509
China Compulsory Certification	**CCC**						BE - BN ME - M	510
Steckverbinder	**CON**						BX - BE - BN MX - ME - M	526
Oberflächenschutz	**C_**						BX - BE - BN MX - ME - M	536
Lackierung	**RAL**						BX - BE - BN MX - ME - M	536
Zertifikate	**ACM**						BX - BE - BN MX - ME - M	537
Prüfzertifikat	**CC**						BX - BE - BN MX - ME - M	537
Rücklaufsperre	**AL**	**AR**					MX - ME - M	530
Betriebsart	**S2**	**S3**	**S9**				BN M	511

* Nur für Motoren BN und M

M4.3 Bremseoptionen

(F06)

Beschreibung	Werte				Verfügbarkeit	Seite
Bremsmoment	Bezogen auf speziellen Bremsentyp					518 521
Manueller Bremslüfthebel	**R**	**RM**			BN M	523
Orientierungdes Bremslösehebel	**AB**	**AA**	**AC**	**AD**	BN M	524
Stromversorgung der Bremse	**NB**	**NBR**	**SB**	**SBR**	BN M	517
Schwungrad für Sanftanlauf	**F1**				BN M	525
Kapazitiver Filter	**CF**				BN M	525
Separate Bremsversorgung (*)	**...SA**	**...SD**			BN M	517 521
Bremsenfunktionskontrolle	**MSW**				BN M	529
Zusätzliche Kabeldurchführung für Bremsmotoren	**IC**				BN M	529

(*) Spannungswert eintragen. Standardwerte bei Lieferung falls nicht anders spezifiziert.

M4.4 Beispiel für Typenschild

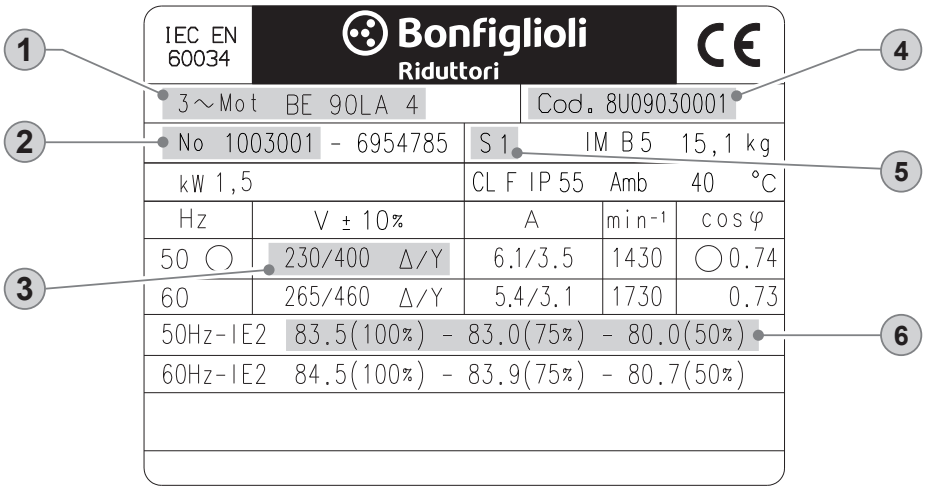

① Identifikationscode BONFIGLIOLI Motor
② Seriennummer
③ Nennspannung
④ Motor-Codenummer
⑤ Betriebsart: S1 Dauerbetrieb
⑥ Wirkungsgradklasse IE bei: 4/4 - 3/4 - 2/4 Belastung

M5 MECHANISCHE EIGENSCHAFTEN

M5.1 Bauformen

Die Motoren der Serie BX, BE und BN weisen die in der nachstehenden Tabelle angegebene Bauform gemäß den Normen EN 60034-7 (BX/BE), CEI EN 60034-14 (BN). auf.

Die Bauformen sind:

IM B5 (Grundmodell)
IM V1, IM V3 (Ableitungen)

Die Motoren in der Bauform IM B5 können auch in den Einbaulagen IM V1 und IM V3 eingesetzt werden; in diesen Fällen ist auf dem Leistungsschild des Motors die Bauform IM B5 angegeben. Bei Bauformen mit vertikaler Lage des Motors und nach unten gerichteter Welle wird die Ausführung mit Schutzdach empfohlen (bei Bremsmotoren stets vorzusehen). Diese Option muß zum Bestellzeitpunkt angegeben werden, da sie in der Grundausführung nicht berücksichtigt ist.

(F07)

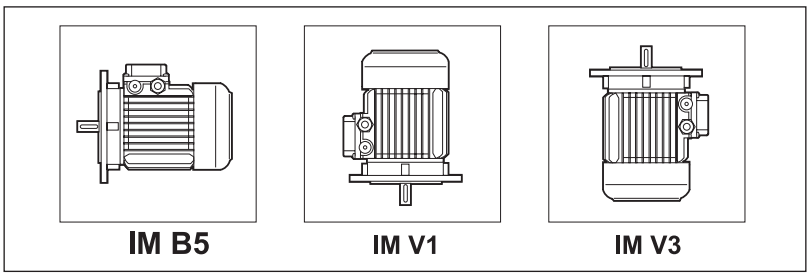

Die Motoren mit Flansch können mit reduzierten Wellen und Flanschmaßen geliefert werden in der nachstehen den Tabelle - Ausführung **B5R**. Die Nutzung des Motors in Kombination mit einem Getriebe muss in Übereinstimmung mit der max. installierbaren Leistung des jeweiligen Getriebes erfolgen, siehe dazu Kapitel „Anbaumöglichkeiten“. Im Fall dass die Kombination nicht zusammen passt, nehmen Sie bitte Kontakt mit dem Technischen Service von Bonfiglioli auf.

(F08)

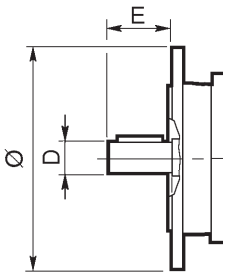

	BN 71	BE/BN 80	BE/BN 90	BE/BN 100	BE/BN 112	BX/BE/BN 132
	DxE - Ø					
B5R(1)	11x23 - 140	14x30 - 160	19x40 - 200	24x50 - 200	24x50 - 200	28x60 - 250

(1) Flansch mit durchgehenden Bohrungen

M5.2 Schutzart

IP..

In der nachstehenden Tabelle werden die jeweiligs zur Verfügung stehenden Schutzarten zusammengefasst.
Unabhängig von der spezifischen Schutzart müssen die im Freien installierten Motoren vor direkter Sonneneinstrahlung geschützt werden. Im Fall einer senkrechten Montage mit Wellenende nach unten, sollte darüber hinaus das Schutzdach bestellt werden, das vor dem Eindringen von Wasser und festen Fremdkörpern schützt (Option **RC**).

(F09)

		IP 54	IP 55	IP 56
BX - BE - BN	**MX - ME - M**	⊖	standard	
BN_FD **BN_FA**	**M_FD** **M_FA**	standard		⊖

IP	5	5

0		Nicht geschützt
1	Ø 50 mm	Geschützt gegen feste Fremdkörper mit Ø ≥ 50 mm
2	Ø 12 mm	Geschützt gegen feste Fremdkörper mit Ø ≥ 12.5 mm
3	Ø 2,5 mm	Geschützt gegen feste Fremdkörper mit Ø ≥ 2.5 mm
4	Ø 1 mm	Geschützt gegen feste Fremdkörper mit Ø ≥ 1.0 mm
5		Staubgeschützt
6		Kein Staubeintritt

0		Nicht geschützt
1		Geschützt gegen senkrecht einfallendes Tropfwasser
2	15°	Geschützt gegen senkrecht einfallendes Tropfwasser bei Neigung bis 15°
3	60°	Regenwassergeschützt
4		Spritzwassergeschützt
5		Wasserstrahigeschützt
6		Gegen starke Wasserstrahien geschützt
7	0,15 m / 1 m	Kurzzeitig wasserdicht
8	...m	Nachhaltig wasserdicht

M5.3 Kühlung

Die Motoren werden mittels Eigenbelüftung gekühlt (IC 411 gemäss CEI EN 60034-6) und sind mit einem Radiallüfterrad aus Kunststoff ausgestattet, welches in beiden Drehrichtungen wirksam ist.
Bei der Installation muß sichergestellt werden, dass die Lüfterradabdeckung soweit vom nächsten Bauteil entfernt ist, daß der Lufteintritt nicht behindert wird und dass der Motor und (falls vorhanden) die Bremse problemlos gewartet werden können. Die Motoren können auf Anfrage mit einem unabhängig gespeisten Fremdlüfter geliefert werden (Option **U1**). Diese Ausführung sollte eingesetzt werden, falls der Motor über einen Frequenzumrichter bei kleinen Drehzahlen oder bei hoher Schalthäufigkeit betrieben wird.

M5.4 Drehrichtung

Der Betrieb in beiden Drehrichtungen ist möglich.
Schließt man die Klemmen U1, V1, W1 an die Phasen L1, L2, L3 an, dreht sich der Motor, mit Sicht auf die Motorwelle, im Uhrzeigersinn. Eine Drehung im Gegenuhrzeigersinn erhält man, indem man zwei Phasen tauscht.

M5.5 Geräuschpegel

Der Geräuschpegel wurde entsprechend der in der Norm ISO 1680 angegeben Methode gemessen und liegt innerhalb der zulässigen Grenzwerte der Norm CEI EN 60034-9.

M5.6 Auswuchtung und Schwingstärke

Die Motoren werden dynamisch mit einer halben Passfeder ausgewuchtet und entsprechen dem Schwingstärkegrad A der Norm CEI EN 60034-14.

M5.7 Motorklemmkasten

Der Klemmkasten hat ein 6-poliges Klemmbrett für einen Anschluss über Kabelschuhe. Im Klemmkastens ist ein Erdungsanschluss für den Anschluss des Schutzleiters vorgesehen. Die Abmessungen der Anschlüsse werden in der nachstehenden Tabelle angegeben.
Für Informationen über die Bremsversorgung verweisen wir an dieser Stelle auf den Par. 8 (Bremstyp FD), 9 (Bremstyp FA). Bei den Bremsmotoren befindet sich der Gleichrichter mit den erforderlichen Anschlussklemmen für die Stromversorgung der Bremse innerhalb des Klemmkastens.
Die elektrischen Anschlüsse müssen entsprechend den Schaltplänen, die sich im Inneren der Klemmkästen befinden, vorgenommen werden oder anhand der Angaben in den Betriebsanleitungen.

(F10)

		Klemmen	Gewinde	Max. leiter-querschnitt mm^2
BE 80, BE 90 **BN 56 ... BN 71** **BN 80, BN 90**	**ME2** **M05, M1** **M2**	6	M4	2.5
BE 100 ... BX 132 - BE 132 **BN 100 ... BN 112** **BN 132 ... BN 160MR**	**ME3, MX4 - ME4** **M3** **MX4 - M4**	6	M5	6
BX 160 - BE 160 **BN 160M ... BN 180M**	**ME5** **MX5 - M5**	6	M6	16
BX 180 - BE 180 **BN 180L ... BN 200L**	**–** **–**	6	M8	25
BE 80 ... BE 132 **BN 63 ... BN 160MR**	**ME2 ... ME4** **M05 ... M4**	9	M4	6
BE 160 ... BE 180 **BN 160M ... BN 200L**	**ME5** **M5**	9	M6	16

M5.8 Kabeleingang

Unter Berücksichtigung der Norm EN 50262 verfügen die Kabeleingänge in die Klemmkästen über metrische Gewinde, deren Maße, der nachstehenden Tabelle entnommen werden können.

(F11)

		Kabeleingänge		maximal zulässiger Kabeldurchmesser [mm]
BN 63	**M05**	2 x M20 x 1.5	1 Bohrung pro Seite	13
BN 71	**M1**	2 x M25 x 1.5		17
BE 80, BE 90 **BN 80, BN 90**	**ME2** **M2**	2 x M25 x 1.5		17
BE 100, BE 112 **BN 100**	**ME3** **M3**	2 x M32 x 1.5 2 x M25 x 1.5	2 Bohrungen pro Seite	21 17
BN 112	**–**	2 x M32 x 1.5 2 x M25 x 1.5		21 17
BX 132 - BE 132 **BN 132...BN 160MR**	**MX4 - ME4** **M4**	4 x M32 x 1.5		21
BX 160 - BE 160, BX 180 - BE 180	**MX5 - ME5**	2 x M40 x 1.5	Orientierbar 4 x 90°	28
BN 160M...BN 200L	**M5**			

M5.9 Lager

Bei den Lagern handelt es sich um Radialkugellager mit Dauerschmierung. Die verwendeten Typen sind in der nachfolgenden Tabelle angegeben. Die Lebensdauer L10h der Lager, ohne Einfluss externer Kräfte, beträgt mehr als 40.000 Stunden (Berechnung gemäß ISO 281).
DE = Wellenseite **NDE** = Lüfterseite

(F12)

	DE	NDE	
	M, M_FD, M_FA	**M**	**M_FD, M_FA**
M05	6004 2Z C3	6201 2Z C3	6201 2RS C3
M1	6004 2Z C3	6202 2Z C3	6202 2RS C3
ME2 - M2	6007 2Z C3	6204 2Z C3	6204 2RS C3
ME3 - M3	6207 2Z C3	6206 2Z C3	6206 2RS C3
MX4 - ME4 - M4	6309 2Z C3	6308 2Z C3	6308 2RS C3
MX5 - ME5 - M5	6309 2Z C3	6309 2Z C3	6309 2RS C3

	DE	NDE	
	BX, BE, BN, BN_FD, BN_FA	**BX, BE, BN**	**BN_FD BN_FA**
BN 56	6201 2Z C3	6201 2Z C3	–
BN 63	6201 2Z C3	6201 2Z C3	6201 2RS C3
BN 71	6202 2Z C3	6202 2Z C3	6202 2RS C3
BE 80 **BN 80**	6204 2Z C3	6204 2Z C3	6204 2RS C3
BE 90 **BN 90**	6205 2Z C3	6205 2Z C3	6305 2RS C3
BE 100 **BN 100**	6206 2Z C3	6206 2Z C3	6206 2RS C3
BE 112 **BN 112**	6306 2Z C3	6306 2Z C3	6306 2RS C3
BX 132 **BE 132** **BN 132**	6308 2Z C3	6308 2Z C3	6308 2RS C3
BN 160MR	6309 2Z C3	6308 2Z C3	6308 2RS C3
BX 160M/L **BE 160M/L** **BN 160M/L**	6309 2Z C3	6309 2Z C3	6309 2RS C3
BN 180M	6310 2Z C3	6309 2Z C3	6309 2RS C3
BX 180M/L **BE 180M/L** **BN 180L**	6310 2Z C3	6310 2Z C3	6310 2RS C3
BN 200L	6312 2Z C3	6310 2Z C3	6310 2RS C3

M6 ELEKTRISCHE EIGENSCHAFTEN

M6.1 Spannung

Die einpoligen Motoren sind in der Standardausführung für eine Nennspannung von 230/400V Δ/Y oder 400/690V Δ/Y 50 Hz mit einer Spannungstoleranz ± 10%, bezogen auf die Typenschildangabe, ausgelegt. Für alle BN und M Motoren, deren Spannungs-/Frequenzangabe nicht in der nachfolgenden Übersicht enthalten ist, gelten reduzierte Spannungstoleranzen von ± 5%.
Bei einem Betrieb an den Toleranzgrenzen kann die Temperatur die vorgesehene Isolationsklasse um 10 K überschreiten. Diese Motoren eignen sich für einen
Betrieb im Europäischen Versorgungsnetz mit einer Spannung, die den in der Veröffentlichung IEC 60038 angegebenen Werten entspricht.

(F13)

Effi-zienzklasse			V_{mot} ± 10 % 3 ~	Ausführung
IE3	**BX 132**	**MX 4**	230 / 400 V - Δ/Y - 50 Hz	standard
	BX 160, BX 180	**MX 5**	400 / 690 V - Δ/Y - 50 Hz	standard
IE2	**BE 80 … 132**	**ME 2 … ME 4**	230 / 400 V - Δ/Y - 50 Hz	standard
			460 V Y - 60 Hz[1]	standard
			400 / 690 V - Δ/Y - 50 Hz	Auf Anfrage, ohne Aufpreis
	BE 160, BE 180	**ME 5**	400 / 690 V - Δ/Y - 50 Hz	standard
			460 V Δ - 60 Hz[1]	standard
IE1	**BN 56 … BN 132**	**M0 … M4**	230 / 400 V - Δ/Y - 50 Hz	standard
			400 / 690 V - Δ/Y - 50 Hz	Auf Anfrage, ohne Aufpreis
			460 V Y - 60 Hz	standard
	BN 160 … 200	**M5**	400 / 690 V - Δ/Y - 50 Hz	standard
			460 V Δ - 60 Hz	standard

[1] nur 4polige Motoren

Die polumschaltbaren Motoren sind nur für eine Standardversorgung von 400V - 50 Hz ausgelegt, Toleranzen gelten gem. CIE EN 60034-1.

In der nachfolgenden Tabelle werden die verschiedenen Wicklungsanschlüsse in Abhängigkeit von den jeweiligen Polzahlen angegeben.

(F14)

Polzahl		Wicklungsanschluß
2	**BE 80 … BE 160, BN 63 … BN 200**	Δ / Y ([2])
4	**BX 132 ... BX 180** **BE 80 … BE 180, BN 56 … BN 200**	
6	**BE 90 … BE 160, BN 63 … BN 200**	
8	**BN 71 … BN 132**	
2/4	**BN 63 … BN 132**	Δ / YY (Dahlander)
2/6	**BN 71 … BN 132**	Y / Y (Zwei wicklungen)
2/8	**BN 71 … BN 132**	
2/12	**BN 80 … BN 132**	
4/6	**BN 71 … BN 132**	
4/8	**BN 80 … BN 132**	Δ / YY (Dahlander)

([2]) Motoren mit dem Spannungsverhältnis 2 (z. B. 230/460V - 60Hz) werden mit einem 9-poligen Klemmbrett in ΔΔ/Δ oder YY/Y - Schaltung gefertigt (Ausnahme 6-polig BN 63 Δ/Y)

M6.2 Frequenz

Die Leistungsangabe auf dem Typenschild BN / M von 60 Hz Motoren entspricht den Daten aus der folgenden Tabelle:

(F15)

		P_n [kW]					P_n [kW]		
		2P	**4P**	**6P**			**2P**	**4P**	**6P**
BN 56A	**–**	–	0.1	–	**BN 112M**	**M3LB**	4.7	3.6	2.0
BN 56B	**M 0B**	–	0.1	–	**–**	**M3LC**	–	4.7	2.5
BN 63A	**M 05A**	0.2	0.1	0.1	**BN 132S**	**M4SA**	–	6.5	3.5
BN 63B	**M 05B**	0.3	0.2	0.1	**BN 132SA**	**M4SA**	6.3	–	–
BN 71A	**M 05C**	0.5	0.3	0.2	**BN 132SB**	**M4SB**	8.7	–	–
BN 71B	**M 05SD**	0.7	0.5	0.3	**BN 132M**	**M4LA**	11.0	–	–
BN 80A	**M 1LA**	0.9	0.7	0.5	**BN 132MA**	**M4LA**	–	8.7	4.6
BN 80B	**M 2SA**	1.3	0.9	0.7	**BN 132MB**	**M4LB**	–	11.0	6.5
BN 90S	**M2SB**	–	1.3	0.9	**BN 160MR**	**M4LC**	12.5	12.5	–
BN 90SA		1.8	–	–	**BN 160MB**	**M5SB**	17.5	–	–
BN 90L	**M3SA**	2.5	–	1.3	**BN 160M**	**M5SA**	–	–	8.6
BN 90LA		–	1.8	–	**BN 160L**	**M5S**	21.5	17.5	12.6
BN 100L	**M3LA**	3.5	–	–	**BN 180M**	**M5LA**	24.5	21.5	–
BN 100LA		–	2.5	1.8	**BN 180L**	**–**	–	25.3	17.5
BN 100LB	**M3LB**	4.7	3.5	2.2	**BN 200L**	**–**	34.0	34.0	22.0

BX / MX sind nur für 50 Hz verfügbar.
BE / ME sind nur in der 4poligen Ausführung für 60 Hz verfügbar. Die Leistungsdaten entsprechen der 50 Hz Ausführung.
Bei polumschaltbare BN / M Motoren, die bei 60 Hz betrieben werden, kommt es zur Erhöhung der Nennleistung in Bezug auf die 50 Hz Werte um ca. 15%. BE/ME Motoren sind nicht als polumschaltbare Varianten verfügbar.
Wenn die Nenndaten für 60 Hz Betrieb, vergleichbar mit den Nenndaten bei 50 Hz, auf dem Motortypenschild aufgeführt werden sollen, dann kann die Option PN gewählt werden.
Die Motoren sind normalerweise für den Betrieb bei 50 Hz ausgelegt, können aber auch unter Berücksichtigung der folgenden Tabelle bei 60 Hz betrieben werden.

(F16)

	50 Hz	**60 Hz**			
	V - 50 Hz	**V** - 60 Hz	**Pn** - 60 Hz	M_n, M_a/M_n - 60 Hz	**n** [min^{-1}] - 60 Hz
BE/ME	**230/400 Δ/Y**	265 - 460 Δ Y	1	0.83	1.2
	400/690 Δ/Y	460 Δ			
BN/M	**230/400 Δ/Y**	220 - 240 Δ			
		380 - 415 Y			
	400/690 Δ/Y	380 - 415 Δ			
BN/M	**230/400 Δ/Y**	265 - 280 Δ	1.15	1	1.2
		440 - 480 Y			
	400/690 Δ/Y	440 - 480 Δ			

M6.3 Umgebungstemperatur

Die im Katalog enthaltenen Tabellen geben die technischen Daten bei einer Frequenz von 50 Hz und normalen Umgebungsbedingungen gemäß den Normen CEI EN 60034-1 an (Temperatur 40 °C und Höhe ≤ 1000 m ü. d. M.).
Die Motoren können bei höheren Temperaturen zwischen 40 °C und 60 °C betrieben werden, wenn man die in der nachfolgenden Tabelle angegebenen Reduktionsangaben berücksichtigt.

(F17)

Umgebungstemperatur (°C)	40°	45°	50°	55°	60°
Zulässige Leistung in % der Nennleistung	100%	95%	90%	85%	80%

Bei Reduktionsfaktoren höher als 15 %, bitten wir um Rücksprache.

M6.4 Auf 50 HZ genormte Leistung

PN

Diese Option ermöglicht es auf dem Typenschild des Motors den Wert der auf 50 Hz genormten Leistung angeben zu können, auch wenn eine Spannungsver-sorgung bei 60 Hz erfolgt. Die Option PN ist immer dabei mit 60 Hz und Spannungsver-sorgung 230/460V und 575V 60 Hz.

M6.5 Motoren für die USA und Kanada

CUS

Die BN-Motoren sind in der Ausführung NEMA, Design C erhältlich (hinsichtlich der elektrischen Eigenschaften); zertifiziert nach den Normen CSA (Canadian Standard) C22.2 Nr 100 und UL (Underwriters Laboratory) UL 1004-1. Bei Bestellung der Option CUS wird das Typenschild mit den nachstehend aufgeführten Symbolen gekennzeichnet:
CUS Option steht nicht für IE3 Motoren zur Verfügung.

C US

Die Spannungen der amerikanischen Verteilernetze und die entsprechenden Nennspannungen, die bei der Bestellung der Motore angegeben werden müssen, können der folgenden Tabelle entnommen werden:

(F18)

Frequenz	Netzspannung	V_{mot}
60 Hz	208 V	**200 V**
	240 V	**230 V**
	480 V	**460 V**
	600 V	**575 V**

CUS Option steht nur bei 50 HZ Betrieb zur Verfügung.

Motoren mit YY/Y-Anschluss (z.B. 230/460V-60Hz; 220/440V-60Hz) haben standardmäßig ein 9-poliges Klemmbrett. Bei vergleichbaren Ausführungen entspricht die Nennleistung der des 50 Hz Motors. Das gilt ebenso für 575 V - 60 Hz Motoren. Für Bremsmotoren mit Gleichstrombremse vom Typ BN_FD erfolgt die Versorgung des Gleichrichters über das Motorklemmbrett mit einer Spannung von 230 V (einphasiger Wechselstrom). Bei Bremsmotoren stellt sich die Versorgung der Bremse wie folgt dar:

(F19)

BN_FD **M_FD**
Vom Motorklemmenkasten 1~230V c.a.

BN_FA **M_FA**		Bitte angeben
Fremdversorgung	230V Δ	230SA
Fremdversorgung	460V Y	460SA

Die CUS-Option ist für die Fremdlüftermotoren nicht anwendbar.

M6.6 China Compulsory Certification

CCC

Die für den Vertrieb in der Volksrepublik China vorgesehenen Elektromotoren fallen unter den Geltungsbereich des Zertifizierungssystems CCC (China Compulsory Certification). Die Motoren der Serie BN mit Nenndrehmoment bis 7 Nm sind mit CCC-Zertifikation und Sondertypenschild mit der unten dargestellten Kennzichnung erhältlich:

CCC Option ist nicht für IE3 Motoren verfügbar.
CCC Option ist nicht für Motoren mit Fremdlüftung verfügbar.

M6.7 Isolationsklasse

CL F

Die Motoren von Bonfiglioli sind serienmäßig mit Isolierstoffen (Emaildraht, Isolierstoffen, Imprägnierharzen) der Klasse **F** ausgestattet.
Allgemein bleiben die Motoren in der Standardausführung innerhalb des Grenzwertes von 80K, der einer Übertemperatur der Klasse B entspricht.
Die sorgfältige Auswahl der Komponenten des Isoliersystem gestatten den Einsatz dieser Motoren auch unter tropischen Klimabedingungen und bei Vorliegen normaler Vibrationen.
Für den Einsatz in in der Nähe aggressiv wirkender chemischer Substanzen oder bei hoher Luftfeuchtigkeit wird empfohlen, sich zur Wahl eines passendes Produktes mit unserem Technischen Kundendienst in Verbindung zu setzen.

CL H

Auf Anfrage können sie auch in der Klasse **H** geliefert werden.
Nicht verfügbar für die mit den CSA- und UL-Normen konformen Motoren (CUS-Option).

(F20)

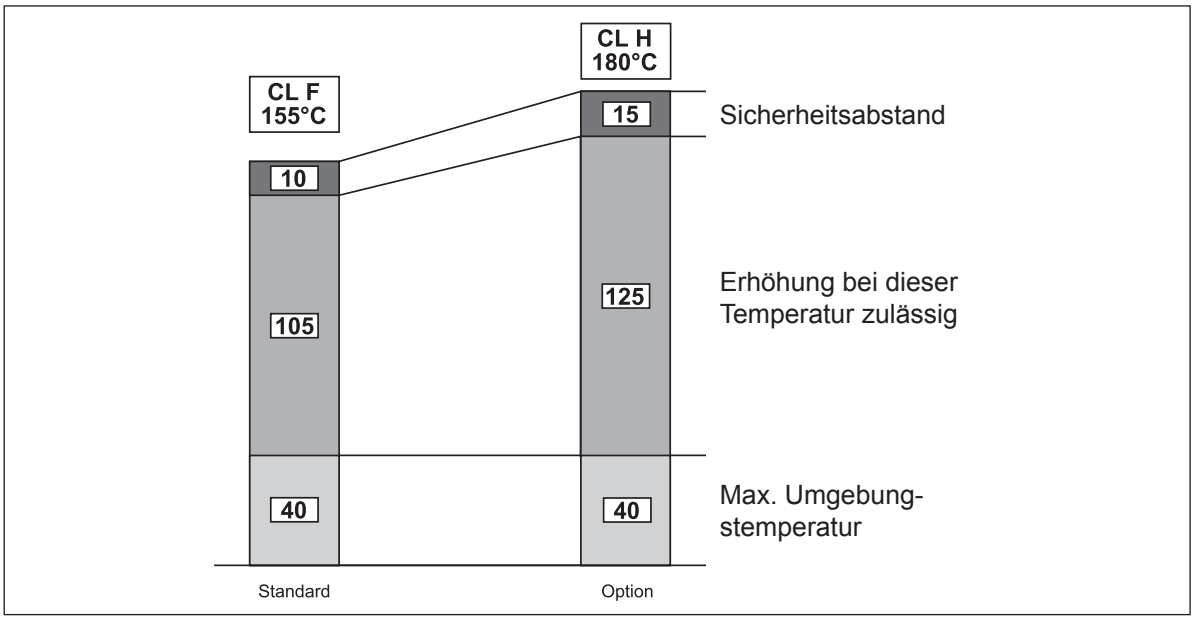

M6.8 Betriebsart

Sofern nicht anderweitig angegeben, beziehen sich die im Katalog angegebene Motorleistungen auf den Dauerbetrieb S1. Bei Motoren, die unter Bedingungen eingesetzt werden, die nicht mit S1 übereinstimmen, muss die entsprechende Betriebsart unter Bezugnahme auf die Normen CEI EN 60034-1 festgelegt werden. Insbesondere kann man, für die Betriebsarten S2 und S3, durch Anwendung der in der nachstehenden Tabelle angeführten Koeffizienten der für den Dauerbetrieb vorgesehenen Leistung gegenüber eine Leistungssteigerung erzielen. Diese Tabelle gilt für einpolige Motoren.
Alternativ zum Dauerbetrieb S1 kann in der Konfigurationsphase des Produkts eine der folgenden Betriebsarten gewählt werden: S2, S3 oder S9. Auf dem Typenschild des Motors werden die erhöhte Leistung entsprechend der Betriebsart, die diesbezüglichen elektrischen Daten und als Betriebsart entweder S2-30min, S3-70% oder S9 angegeben.
Für weitere Details bitte den technischen Kundendienst von Bonfiglioli kontaktieren.
Für die polumschaltbaren Motoren sollte man sich im Hinblick auf den Leistungssteigerung, mit unserem Technischen Kundendienst in Verbindung setzen.

(F21)

	Betriebsart						
	S2			**S3 ***			**S4 - S9**
	Dauer (min)			Schaltverhältnis (I)			Setzen Sie sich mit uns in Verbindung
	10	**30 (*)**	**60**	**25%**	**40%**	**70% (*)**	
f_m	1.35	1.15	1.05	1.25	1.15	1.1	

* Die Zyklusdauer muß in jedem Fall kleiner oder gleich 10 Minuten sein. Wenn sie darüber liegt, bitte Rücksprache mit unserem Technischen Kundendienst.
(*) Standardwert der Optionen (Tab. F05).

M6.8.1 Relative Einschaltdauer:

$$I = \frac{t_f}{t_f + t_r} \cdot 100 \qquad (01)$$

t_f = Betriebszeit mit konstanter Last
t_r = Aussetzzeit

M6.8.2 Kurzzeitbetrieb S2

Betrieb mit konstanter Last für eine begrenzte Zeit, die unter der Zeit liegt, die zum Erreichen des thermischen Beharrungszustands benötigt wird, gefolgt von einer Pause, die so lang ist, dass der Motor nahezu wieder auf die Umgebungstemperatur abkühlen kann.

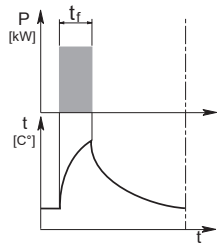

M6.8.3 Aussetzbetrieb S3:

Betrieb mit aufeinanderfolgenden, identischen Betriebszyklen, die alle einen Zeitraum mit konstanter Belastung und einer Pause beinhalten.
Bei dieser Betriebsart beeinflusst der Anlaufstrom die Übertemperatur nicht merklich.

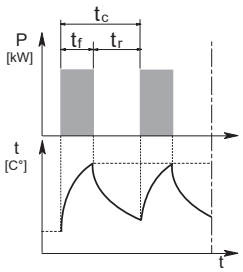

M6.9 Frequenzumrichterbetrieb

Die Elektromotoren Bonfiglioli können über PWM Frequenzumrichter bis 500 V Nennspannung am Umrichtereingang versorgt werden. Bei den Serienmotoren wird ein Phasenisolierungsystem mittels Wicklungstrenner, Emaildraht der Klasse 2 und Imprägnierharze der Klasse H eingesetzt (widerstandsfähig bei Spannungsimpulsen bis 1600 V Spitze-Spitze und Anstiegszeiten t_s > 0.1µs an den Motorklemmen). Die typischen Merkmale von Drehmoment/Geschwindigkeit im Betrieb S1 für Motoren mit einer Grundfrequenz f_b = 50 Hz werden in der nachstehenden Tabelle, verfügbar. Bei Betriebsfrequenzen unter ungefähr 30 Hz müssen die eigenbelüftenden Standardmotoren (IC411) aufgrund der in diesem Fall abnehmenden Kühlung entsprechend drehmomentreduziert oder, alternativ, fremdbelüftet betrieben werden. Bei über der Grundfrequenz liegenden Drehzahlen arbeitet der Motor nach Erreichen des max. Spannungswerts am Umrichterausgang in einem Feldschwächebereich mit konstanter Leistung mit einem reduziertem Drehmoment, welches ungefähr im Verhältnis (f/f_b) abnimmt. Da das Kippmoment des Motors ungefähr mit dem Faktor $(f/f_b)^2$ abnimmt, muss auch der zulässige Überlastungsgrenzwert entsprechend reduziert werden.

(F22)

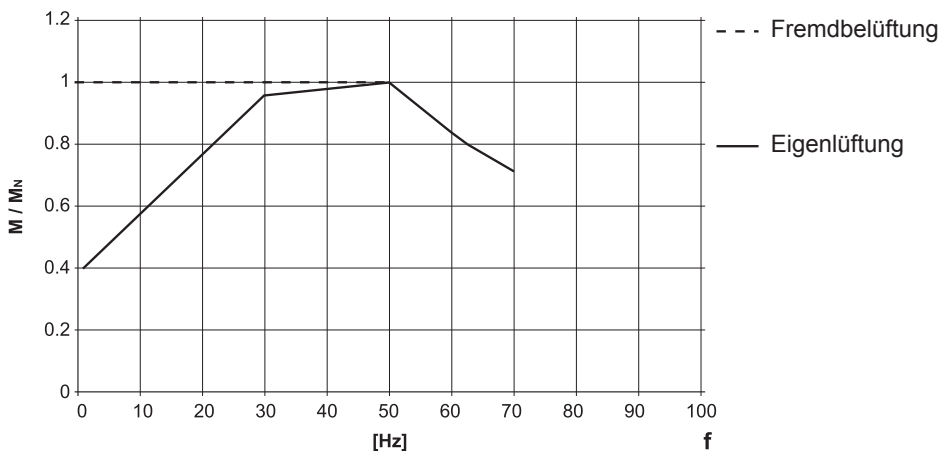

Für Anwendungen, bei denen der Motor oberhalb der Eckfrequenz betrieben wird, finden sie die mechanische Drehzahlgrenzen in der folgenden Tabelle:

(F23)

		n [min^{-1}]		
		2p	**4p**	**6p**
≤ BE 112 - BN 112	**ME2 - ME3** **M05 ... M3**	5200	4000	3000
BX 132 ... BX 180	**MX4** **MX5**		4000	
BE 132 ... BE 180	**ME4** **ME5**	4500	4000	3000
BN 132 ... BN 200L	**M4** **M5**	4500	4000	3000

Bei Drehzahlen oberhalb der Nennwerte, treten stärkere mechanische Schwingungen und höhere Lüftergeräusche auf. Bei diesen Anwendungen wird ein Auswuchten des Rotors im Grad B und eventuell der Einsatz eines Fremdlüfters empfohlen.

Der Fremdlüfter und, falls vorhanden, die elektromagnetische Bremse müssen immer direkt über das Netz gespeist werden.

M6.10 Maximale Schaltungshäufigkeit Z

In den Datentabellen der Motoren ist für den jeweiligen Bremsentyp die maximale Schaltungshäufigkeit im Leerlauf Z0 bei relativer Einschaltdauer I = 50% angegeben. Dieser Wert definiert die maximale Anzahl von Anläufen im Leerlauf pro Stunde, ohne dass die maximal zulässige Wicklungstemperatur der Isolierstoffklasse F überschritten wird.
Wenn in der realen Anwendung beispielsweise ein Motor eine Last mit dem Massenträgheitsmoment J_c mit einem mittleren Anlauf-Lastmoment M_L antreibt und dabei die Leistung P_r benötigt, kann die max. zulässige Schalthäufigkeit mit folgender Formel überschlägig berechnet werden:

$$Z = \frac{Z_0 \cdot K_c \cdot K_d}{K_J} \qquad (02)$$

wo:

$K_J = \frac{J_m + J_c}{J_m}$	Massenträgheitsfaktor
$K_c = \frac{M_a - M_L}{M_a}$	Drehmomentfaktor
$K_d =$	Lastfaktor, siehe folgende Tabelle

(F24)

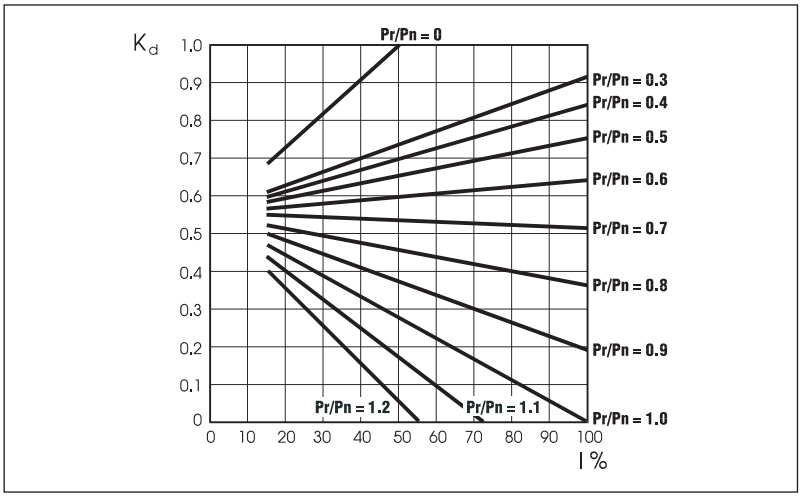

Auf Grundlage der berechneten Schaltspiele muss anschließend anhand der Tabellen (F31) und (F41) überprüft werden, ob die geforderte Bremsarbeit die Wärmegrenzleistung der Bremse Wmax nicht überschreitet.

M7 DREHSTROMBREMSMOTOREN

M7.1 Betriebsweise

Die Bremsmotoren sind mit Federdruckbremsen ausgestattet, die mit Gleichstrom (Typ FD) oder mit Drehstrom (Typ FA) gespeist werden.
Alle Bremsen arbeiten gemäß dem sicheren Ruhestromprinzip, d.h. sie fallen bei Stromausfall über Federdruck ein.

(F25)

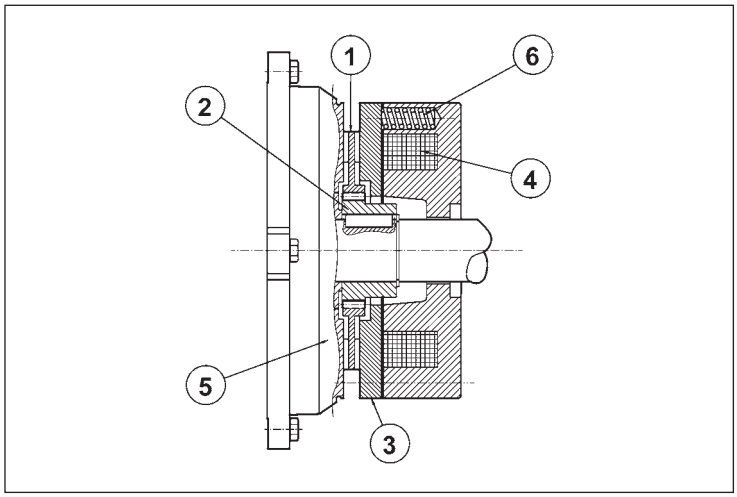

Zeichenerklärung:
① Bremsscheibe
② Nabe
③ Beweglicher Anker
④ Ringspule
⑤ Motorschild
⑥ Sprungfedern

Wenn die Spannungsversorgung unterbrochen wird, schieben Druckfedern den beweglichen Anker gegen die Bremsscheibe. Die Bremsscheibe wird zwischen der Ankerfläche und dem Motorschild gepresst und blockiert damit den Rotor. Wird die Spule erregt, wird der Anker durch das Magnetfeld gegen die Federkraft bewegt und die Bremsscheibe und damit auch der Rotor werden wieder frei gegeben.

M7.2 Allgemeine Eigenschaften

- Hohe und einstellbare Bremsmomente (allgemein Mb ≈ 2 Mn).
- Bremsscheibe mit Stahlkern und doppeltem Bremsbelag (Material mit geringem Verschleiß, asbestfrei).
- Sechskant hinten an der Motorwelle, auf Lüfterradseite (N.D.E.), für eine manuelle.
- Drehung des Rotors mit einem Inbusschlüssel (nicht lieferbar, wenn die Optionen PS, RC, TC, U1, U2, EN1, EN2, EN3, EN4, EN5, EN6) bestellt werden.
- Manuell zu betätigende, mechanische Bremslüftvorrichtung (Optionen R und RM für BN_FD; Optionen R für BN_FA).
- Korrionsschutzbehandlung an allen Flächen der Bremse.
- Isolierstoffklasse in Klasse F.

M8 DREHSTROMBREMSMOTOREN MIT GLEICHTROMBREMSE: TYP BN_FD und M_FD

Baugrößen: BN 63 … BN 200L / M05 ... M5
BE/ME Motoren können auch mit Bremsen ausgestattet werden. Für weitere Informationen wenden Sie sich bitte an den technischen Service.

(F26)

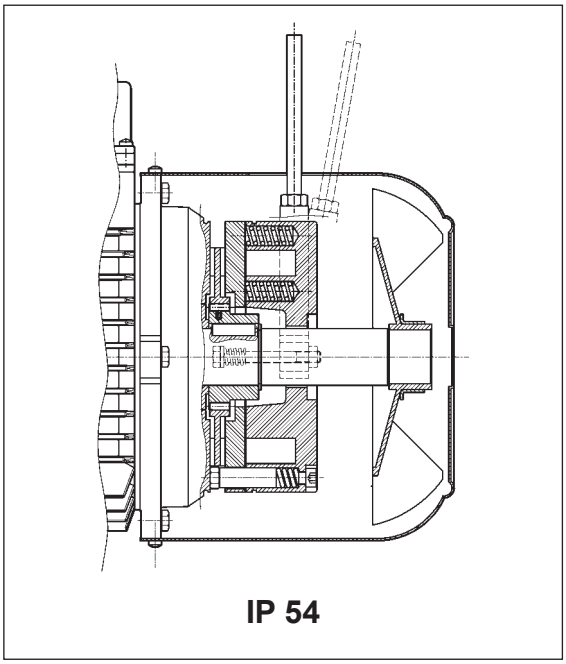

(F27)

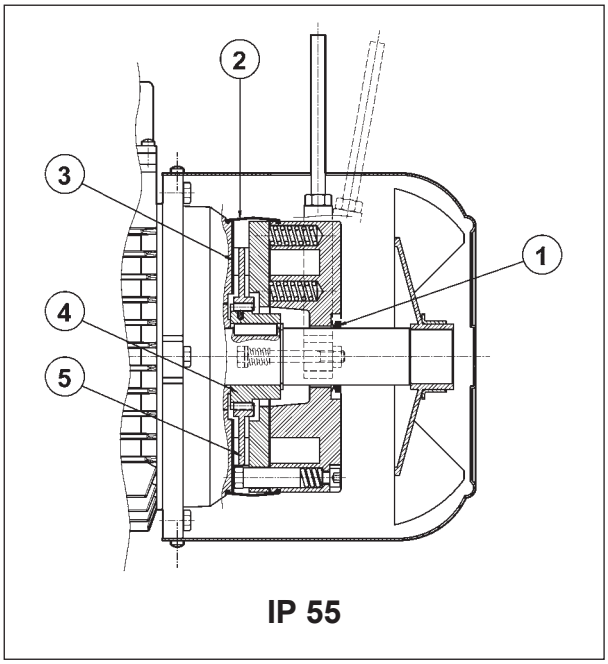

Elektromagnetische Bremse mit Ringwicklungsspule für **Gleichstromspannung**, die mittels Schrauben am hinteren Motorschild befestigt ist. Die Federn sorgen für die axiale Ausrichtung des Magnetkörpers. Die Bremsscheibe gleitet auf der Mitnehmernabe aus Stahl; die Nabe ist an der Welle aufgezogen und mit Schwingungsdämpfung versehen. Die Motoren werden vom Hersteller auf das in der Tabelle der technischen Daten angegebenen Bremsmoment eingestellt. Das Bremsmoment kann durch das Ändern des Typs und/oder der Anzahl der Federn eingestellt werden. Auf Anfrage können die Motoren mit einem Bremslüfthebel für die manuelle Lüftung der Bremse mit selbsttätiger Rückstellung (**R**) ohne Arretierung oder mit arretierbarem Lüfthebel (**RM**) geliefert werden. Die Festlegung der möglichen Positionen des Bremslüfthebels in Abhängigkeit von der Klemmkastenlage erfolgt durch die Optionsbeschreibung im Abschnitt „BREMSLÜFTHEBEL“.
Die Bremse vom Typ FD garantiert hohe dynamische Leistungen und niedrige Laufgeräusche. Die Ansprecheigenschaften der Bremse unter Gleichstrom können je nach Bedarfsfall durch den Einsatz der verschiedenen verfügbaren Gleichrichter oder durch einen entsprechenden Bremsenanschluss optimiert werden.
Für Anwendungen, bei denen Hubvorgänge und/oder hohe Werte stündlich anfallender Arbeit vorgesehen sind, bitte den technischen Kunden-/Vertriebsdienst kontaktieren.

M8.1 Schutzart

Die Standardausführung ist Schutzart IP54 vor. Optional kann der Bremsmotor vom Typ FD in der Schutzart **IP55** geliefert werden, wobei sind folgende Komponenten eingesetzt werden:

① V-Ring an der Motorwelle N.D.E.
② Schutzring aus Gummi
③ Ring aus rostfreiem Stahl zwischen Motorschild und Bremsscheibe
④ Mitnehmernabe aus rostfreiem Stahl
⑤ Bremsscheibe aus rostfreiem Stahl

M8.2 Spannungsversorgung der Bremse FD

Die Versorgung der Gleichstrombremsspule erfolgt über einen Gleichrichter im Klemmkasten, der, falls nichts anderes angegeben ist, werkseitig mit der Bremsspule verdrahtet ist.
Bei den einpoligen Motoren ist serienmäßig der Anschluss des Gleichrichters an das Motorklemmbrett vorgesehen. Unabhängig von der Netzfrequenz erfolgt die Versorgung des Gleichrichters VB über die in der nachstehenden Tabelle angegebenen Standardspannungen:

(F28)

2, 4, 6 P					**1 speed**
		BN_FD / M_FD		Bremsenversorgung über die Motorspannung	Separate Versorgung
		V_{mot} ± 10% 3 ~	V_B ± 10% 1 ~		
BN 63…BN 132	**M05...M4LB**	230/400 V – 50 Hz	230 V	standard	angeben **V_B SA** o **V_B SD**
BN 160…BN 200	**M4LC...M5**	400/690 V – 50 Hz	400 V	standard	angeben **V_B SA** o **V_B SD**

Die polumschaltbaren Motoren müssen immer mit separater Bremsenversorgungsspannung betrieben werden, deshalb erfolgt die Lieferung standardmäßig ohne Anschluss der Bremse an das Motorklemmbrett. Die Versorgungsspannung des Gleichrichters V_B wird in der nachstehenden Tabelle angegeben:

(F29)

2/4, 2/6, 2/8, 2/12, 4/6, 4/8 P					**2 speed**
		BN_FD / M_FD		Bremsenversorgung über die Motorspannung	Separate Versorgung
		V_{mot} ± 10% 3 ~	V_B ± 10% 1 ~		
BN 63…BN 132	**M05...M4LB**	400 V – 50 Hz	230 V	⊖	angeben **V_B SA** o **V_B SD**

Bei dem Gleichrichter handelt es sich um einen Typ mit Einwegschaltung (VDC ≈ 0,45 VAC). Er ist in den Versionen **NB**, **SB**, **NBR** und **SBR**, gemäß den Details in der nachstehenden Tabelle, verfügbar:

(F30)

		Bremse	**standard**	**auf Anfrage**
BN 63	**M05**	**FD 02**	**NB**	**SB**
BN 71	**M1**	**FD 03**		
		FD 53		
BN 80	**M2**	**FD 04**		**SBR**
BN 90S	**—**	**FD 14**		
BN 90L	**—**	**FD 05**		**NBR**
BN 100	**M3**	**FD 15**		
—		**FD 55**	**SB**	**SBR**
BN 112	**—**	**FD 06S**		
BN 132...160MR	**M4**	**FD 56**		
BN 160L - BN 180M	**M5**	**FD 06**		
BN 180L - NM 200L	**—**	**FD 07**		

(*) $t_{2c} < t_{2r} < t_2$

Der Gleichrichter **SB** mit elektronischer Kontrolle der Erregung reduziert die Bremslüftzeiten, indem er die Bremsspule im Einschaltmoment übermäßig stark erregt, um dann, nach erfolgtem Lüftvorgang, in die normale Gleichrichterschaltung umzuschalten.

Der Einsatz des Gleichrichtertyps **SB** wird bei folgenden Einsatzfällen empfohlen:
- hohe Schalthäufigkeit
- kurze Bremslüftzeiten
- starke thermische Beanspruchung der Bremse

Für die Anwendungen mit schnellen Bremsenreaktionszeiten (Öffnungszeit der Bremse) , können auf Anfrage die Gleichrichter **NBR** oder **SBR** geliefert werden.
Diese Gleichrichter erweitern die Funktion der Typen **NB** und **SB**, indem bei Spannungsunterbrechung ein elektronischer Schaltkreis einen Kontakt öffnet und dadurch die Magnetspule schnell entregt wird. Diese Lösung ermöglicht eine Verkürzung der Bremsansprechzeiten ohne zusätzlichen Schaltungsaufwand.
Bestmögliche Performance wird bei den Gleichrichtern **NBR** und **SBR** mit einer separaten Versorgungsspannung erreicht.
Verfügbare Spannungen: 230VAC ±10%, 400VAC ± 10%, 50/60 Hz (mit Gleichrichter); 100VDC ±10%, 180VDC ± 10% (mit Option SD).

M8.3 Technische Daten - Bremsentyp FD

In der nachstehenden Tabelle werden die technischen Daten der Gleichstrombremsen vom Typ FD angegeben.

(F31)

Bremse	Bremsmoment M_b [Nm] feder			Ansprechzeit		Bremsvorgang		W_{max} pro Bremsvorgang [J]			W	P
				t_1	t_{1s}	t_2	t_{2c}					
	6	4	2	[ms]	[ms]	[ms]	[ms]	10 s/h	100 s/h	1000 s/h	[MJ]	[W]
FD02	–	3.5	1.75	30	15	80	9	4500	1400	180	15	17
FD03	5	3.5	1.75	50	20	100	12	7000	1900	230	25	24
FD53	7.5	5	2.5	60	30	100	12					
FD04	15	10	5	80	35	140	15	10000	3100	350	30	33
FD14												
FD05	40	26	13	130	65	170	20	18000	4500	500	50	45
FD15	40	26	13	130	65	170	20					
FD55	55	37	18	–	65	170	20					
FD06S	60	40	20	–	80	220	25	20000	4800	550	70	55
FD56	–	75	37	–	90	250	20	29000	7400	800	80	65
FD06		100	50		100	250	20					
FD07	150	100	50	–	120	200	25	40000	9300	1000	130	65
FD08*	250	200	170	–	140	350	30	60000	14000	1500	230	100
FD09**	400	300	200	–	200	450	40	70000	15000	1700	230	120

* erreichte Bremsmomentwerte, die durch den Einsatz von jeweils 9, 7, 6 Federn erreicht werden

** Werte, der durch den Einsatz von jeweils 12, 9, 6 Federn erreichten Bremsmomente

t_1 = Ansprechzeit der Bremse mit Einweggleichrichter
t_{1s} = Ansprechzeit der Bremse mit elektronisch gesteuertem Gleichrichter
t_2 = Bremsverzögerung mit Unterbrechung auf Wechselstromseite und Fremdversorgung
t_{2c} = Bremsverzögerung mit Unterbrechung auf Wechselstrom- und Gleichstromseite – Die in der Tab. (F30) angegebenen Werte t_1, t_{1s}, t_2, t_{2c} beziehen sich auf eine Bremse mit eingestelltem max. Bremsmoment, mit mittlerem Luftspalt und bei Nennspannung
W_{max} = max. Energie pro Bremsvorgang
W = Bremsenergie zwischen zwei Einstellungen des Luftspalts
P_b = bei 20° C von der Bremse aufgenommene Leistung (50 Hz)
M_b = statisches Bremsmoment (±15%)
s/h = Schaltspiele pro stunde

Der Verschleiß der Reibdichtungen ist von den Betriebsbedingungen abhängig (Temperatur, Feuchtigkeit, Schlupfgeschwindigkeit, spezifischer Druck); die Verschleißangaben sind demnach als Richtwerte zu betrachten.

M8.4 Anschlüsse - Bremsentyp FD

Die einpoligen Motoren werden mit werkseitig an das Motorklemmbrett angeschlossenen Gleichrichtern geliefert. Bei den polumschaltbaren Motoren und bei Bremsen mit separater Versorgung werden die Gleichrichter kundenseitig mit einer auf dem Typenschild angegeben Bremsenspannung VB angeschlossen.
Da es sich bei der Bremsspule um eine induktive Last handelt, müssen gemäß IEC 60947-4-1 für die Ansteuerung der Bremse und die Unterbrechung der Gleichstromseite Kontakte der Kategorie AC-3 verwendet werden.

Tabelle (F32) – Bremsenversorgung über die Motorspannung und netzseitige Unterbrechung. Verzögerter und von den Zeitkonstanten des Motors abhängige Haltezeit t_2. Vorzusehen, wenn möglichst ruckfreie Starts/Stopps gefordert sind.
Tabelle (F33) – Bremsspule mit separater Spannungsversorgung und Unterbrechung der Wechselstromseite. Normale und vom Motor unabhängige Stoppzeiten. Es werden die in der Tabelle (F31) angegebenen Stoppzeiten t_2 realisiert.
Tabelle (F34) – Bremsspule mit Versorgung über die Motorspannung und Unterbrechung der Gleich- und der Motorspannung. Schneller Stopp mit den in der Tabelle (F31) angegebenen Ansprechzeiten t_{2c}.
Tabelle (F35) – Bremsspule mit separater Spannungsversorgung und Unterbrechung der Gleich- und der Wechselstromseite.
Reduzierte Stoppzeiten mit den in der Tabelle (F31) angegebenen Werten t_{2c}.

Die Bremsspannungsversorgung über die Motorspannung (von Tab. F32 bis Tab. F35) darf nur erfolgen wenn die Nennspannung der Bremse der geringeren Nennspannung des Motors entspricht.

(F32)

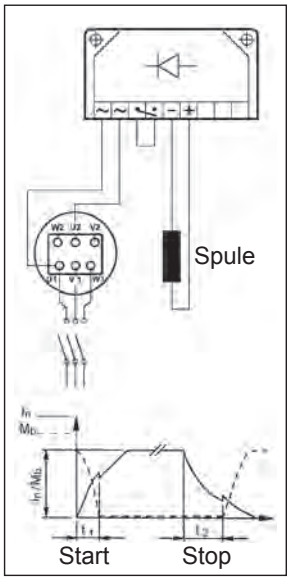

(F33)

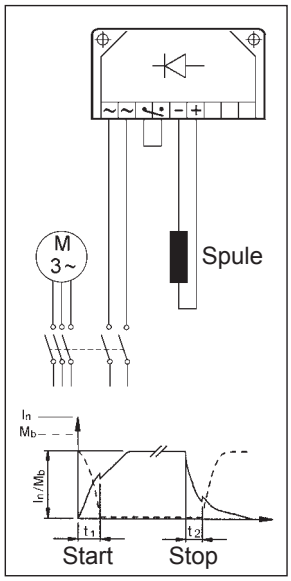

(F34)

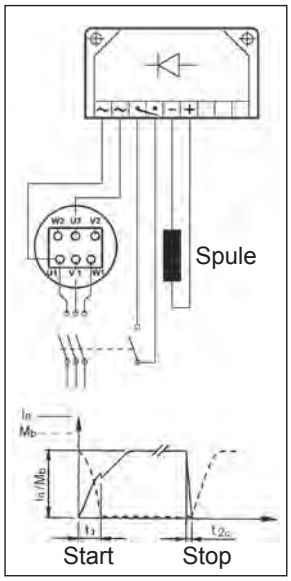

(F35)

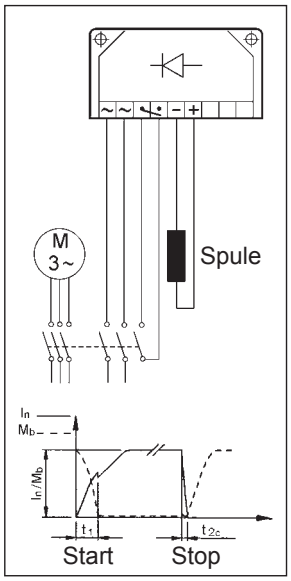

M9 DREHSTROMBREMSMOTOREN MIT DREHSTROMBREMSE: TYP BN_FA und M_FA

Baugrößen: BN 63 … BN 180M / M05 ... M5

(F36)

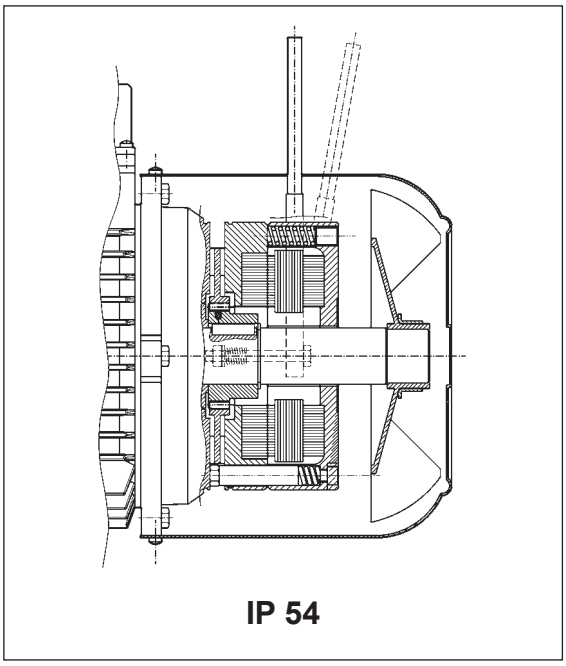

(F37)

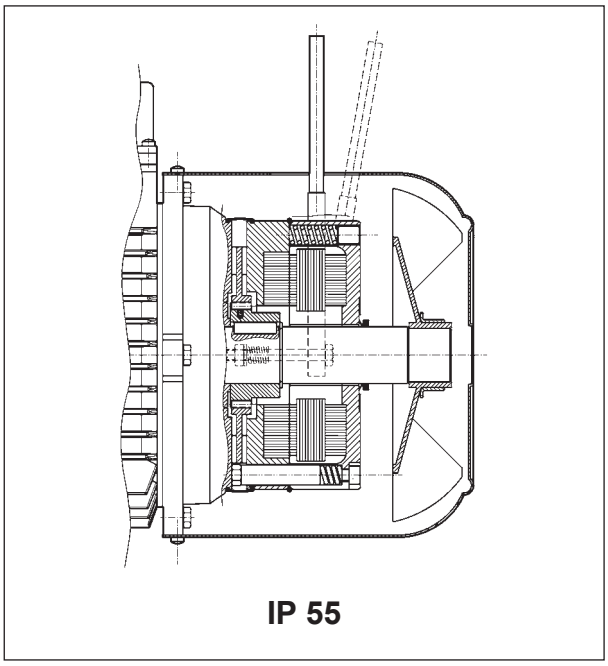

Elektomagnetische Bremse mit Drehstromversorgung, die mittels Schrauben am hinteren Motorschild befestigt ist. Die Federn sorgen dabei für die axiale Ausrichtung des Magnetkörpers. Die Bremsscheibe (Stahl) gleitet axial auf dem sich auf dem Rotor befindlichen Mitnehmer, der über eine Paßfeder mit Motorwelle verbunden und mit Schwingungsdämpfung ist as Bremsmoment wird auf das entsprechende Motormoment eingestellt (siehe Tabelle der technischen Daten der entsprechenden Motoren). Das Bremsmoment ist stufenlos über die Schrauben der Federvorspannung einstellbar. Der Einstellbereich beträgt 30% MbMAX < Mb < MbMAX (MbMAX steht für das in der Tab (F39) angegebene max. Bremsmoment).
Die Bremsen vom Typ FA zeichnen sich durch eine hohe Dynamik aus, weshalb sie für Anwendungen geeignet sind, in denen hohe Schaltfrequenzen und schnelle Ansprechzeiten gefordert werden.
Auf Anfrage können die Motoren mit einem Lüfthebel für die manuelle Lüftung der Bremse mit automatischer Rückstellung (R) geliefert werden. Die Festlegung der möglichen Positionen des Bremslüfthebels in Abhängigkeit von der Klemmkastenlage erfolgt durch die Optionsbeschreibung im Abschnitt „BREMSLÜFTHEBEL“.
Für Anwendungen, bei denen Hubvorgänge und/oder hohe Werte stündlich anfallender Arbeit vorgesehen sind, bitte den technischen Kunden-/Vertriebsdienst kontaktieren.

M9.1 Schutzart

Die Standardausführung hat Schutzart IP54 vor.
Optional kann der Bremsmotor BN_FA auch in der Schutzart **IP55** geliefert werden, was durch die folgenden zusätzlichen Bauteile erreicht wird:

- V-ring an der Motorwelle N.D.E.
- Schutzring aus Gummi
- O-ring

M9.2 Spannungsversorgung - Bremsentyp FA

Bei den einpoligen Motoren wird die Versorgung der Bremsspule direkt vom Motorklemmbrett abgenommen, das bedeutet, dass die Spannung der Bremse mit der Motorspannung übereinstimmt. In diesem Fall braucht die Bremsenspannung nicht extra angegeben werden.
Bei polumschaltbaren Motoren und bei separater Versorgungsspannung ist ein Hilfsklemmbrett mit 6 Anschlüssen vorgesehen, die einen Anschluss der Bremse ermöglichen. In beiden Fällen muss die Bremsenspannung in der Bestellung angegeben werden.
In der nachstehenden Tabelle werden für die einpoligen und die polumschaltbaren Motoren die Standardspannungen der Wechselstrombremsen angegeben.

(F38)

	BN 63…BN 132	BN 160…BN 180
Einpolige Motoren	230Δ / 400Y V ±10% – 50 Hz	400Δ/ 690Y V ±10% – 50 Hz
	265Δ / 460Y ±10% - 60 Hz	460Y – 60 Hz

	BN 63…BN 132
Polumschaltbare Motoren (separate Versorgung)	230Δ / 400Y V ±10% – 50 Hz
	460Y - 60 Hz

Falls nicht anderweitig angegeben, beträgt die Standardversorgung der Bremse 230 V Δ / 400 V Y - 50 Hz.

Auf Anfrage können Sonderspannungen von 24…690 V, 50-60 Hz geliefert werden.

M9.3 Technische Daten der Bremsen vom Typ FA

(F39)

Bremse	Bremsmoment M_b [Nm]	Ansprechzeit t_1 [ms]	Bremsvorgang t_2 [ms]	W_{max} [J] 10 s/h	100 s/h	1000 s/h	W [MJ]	P [VA]
FA 02	3.5	4	20	4500	1400	180	15	60
FA 03	7.5	4	40	7000	1900	230	25	80
FA 04 / **FA 14**	15	6	60	10000	3100	350	30	110
FA 05 / **FA 15**	40	8	90	18000	4500	500	50	250
FA 06S	60	16	120	20000	4800	550	70	470
FA 06	75	16	140	29000	7400	800	80	550
FA 07	150	16	180	40000	9300	1000	130	600
FA 08	250	20	200	60000	14000	1500	230	1200

M_b = statisches max. Bremsmoment (±15%)
t_1 = Bremsenansprechzeit
t_2 = Bremsverzögerung
W_{max} = max. Energie pro Bremsvorgang (Wärmeleistung der Bremse)
W = Bremsenergie zwischen zwei Einstellungen des Luftspalts
P_b = bei 20° von der Bremse aufgenommene Leistung (50 Hz)
s/h = Schaltspiele pro Stunde

HINWEIS:
Die in der Tabelle angegebenen Werte t_1 und t_2 beziehen sich auf eine Bremse mit eingestelltem Nenndrehmoment, einen mittleren Luftspalt und mit Standardspannung.

Der Verschleiß der Reibdichtungen ist von den Betriebsbedingungen abhängig (Temperatur, Feuchtigkeit, Schlupfgeschwindigkeit, spezifischer Druck); die Verschleißangaben sind demnach als Richtwerte zu betrachten.

M9.4 Anschlüsse - Bremsentyp FA

Bei den Motoren mit direkter Bremsenspannungsversorgung müssen die Anschlüsse im Klemmkasten entsprechend den Angaben im der folgenden Schema vorgenommen werden:

(F40)

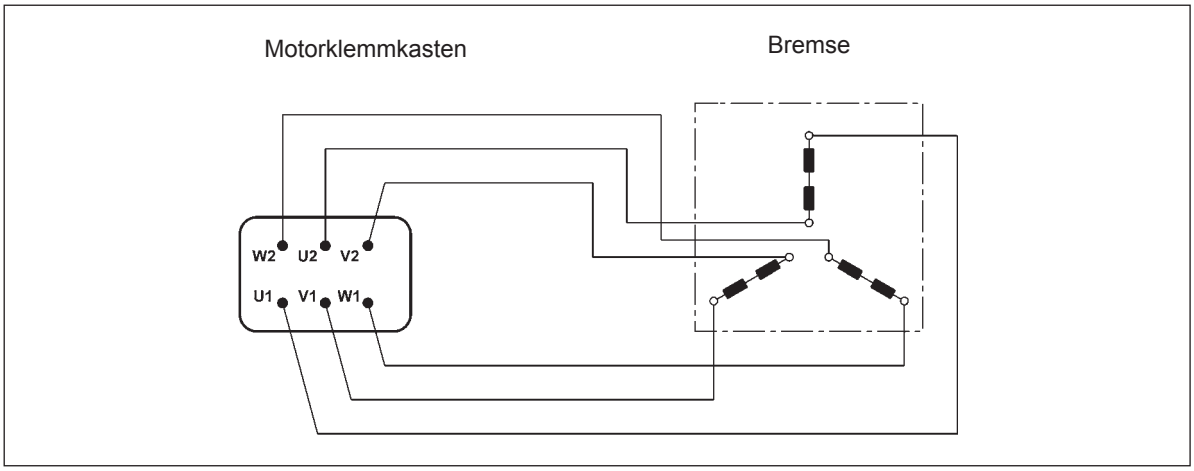

Bei den polumschaltbaren Motoren und, auf Anfrage, auch bei den einpoligen Motoren mit separater Versorgungsspannung ist für den Anschluss der Bremse ein Hilfsklemmbrett mit 6 Anschlüssen vorgesehen. Dann haben die Motoren einen größeren Klemmkasten. Siehe im der folgenden Schema:

(F41)

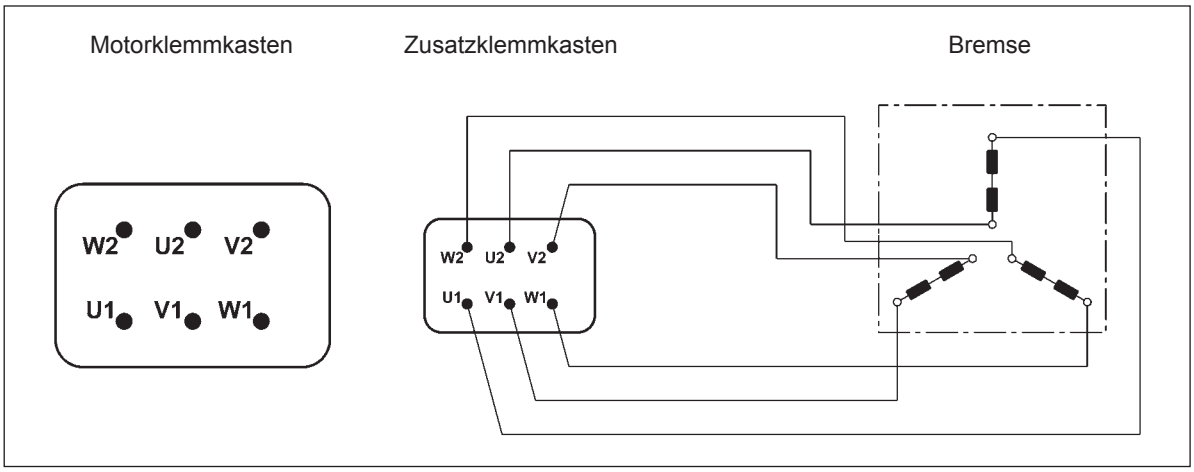

M10 BREMSLÜFTHEBEL

Für Instandhaltungsarbeiten können die Federdruckbremsen vom Typ FD und FA optional mit Bremslüfthebeln geliefert werden, um ein manuelles Lüften zu ermöglichen.

R

(F42)

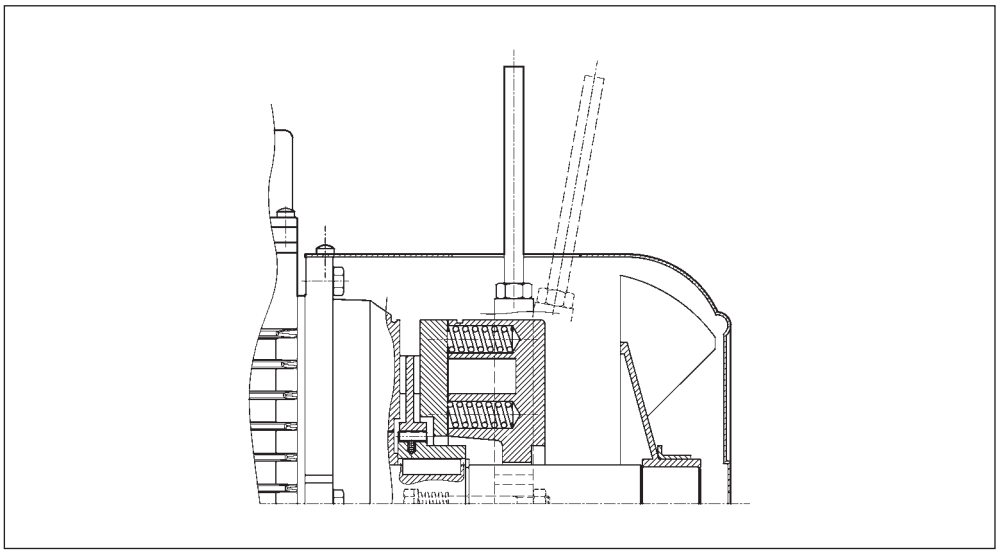

Bremslüfthebel mit automatischer Rückstellung durch Federkraft.

RM

(F43)

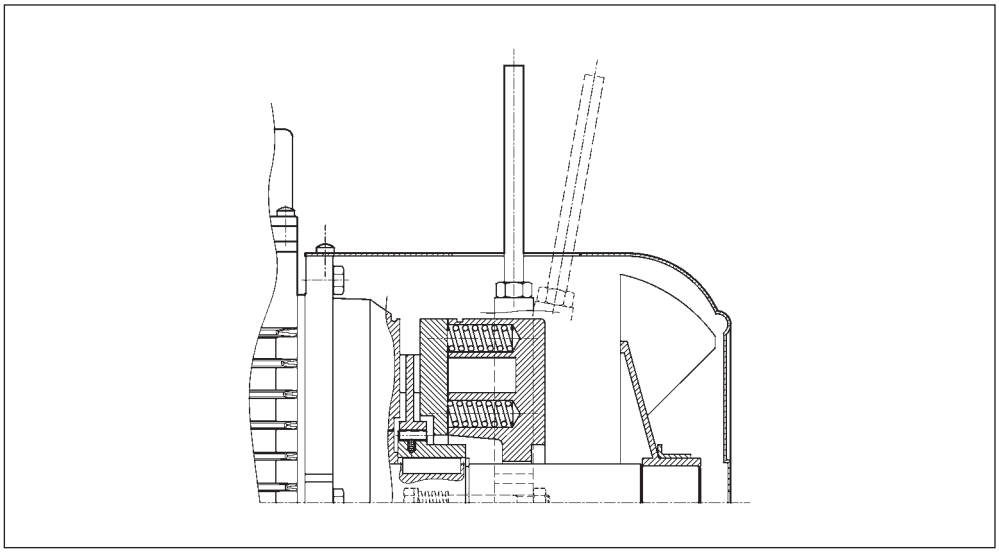

Der Bremslüfthebel kann bei Bedarf in der Lüftposition arretiert werden, wenn man diesen bis zur Bremsenarretierung einschraubt.
Je nach Motortyp sind unterschiedliche Bremslüftsysteme verfügbar, die Sie der folgenden Tabelle entnehmen können:

(F44)

	R	RM
BN_FD	**BN 63...BN 200**	**BN 63 ... BN 132** ⛔ **FD07**
BN_FA	**BN 63...BN 180M**	⛔

M10.1 Ausrichtung des Bremslüfthebels

Der Bremslüfthebel wird bei den Optionen **R** und **RM** standardmäßig um 90° im Uhrzeigersinn zur Position des Klemmkastens montiert (Position [**AB**] in der nachfolgenden Zeichnung).
Andere Positionen: **AA** (0° zum Klemmkasten), **AC** (180° zum Klemmkasten) oder **AD** (270° zum Klemmkasten), im Uhrzeigersinn vom Lüfter aus gesehen, können auf Wunsch geliefert werden:

(F45)

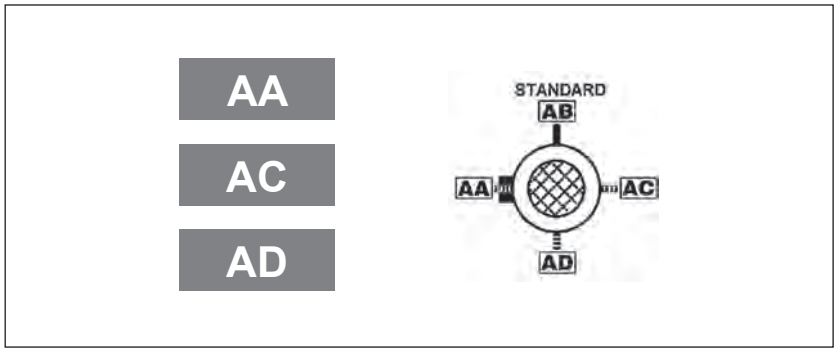

M11 OPTIONEN

M11.1 Sanftanlauf / stop

F1

Für Anwendungen, bei denen einer sanfte Anlauf-und Stop erforderlich ist, steht als - Option F1 - ein Schwungrad zur Verfügung, dessen zusätzliches Trägheitsmoment während der Anlaufphase kinetische Energie aufnimmt, die in der Abbremsphase wieder abgegeben wird. Dadurch erfolgen die Übergangsphasen progressiver unds anfter. Das Schwungrad ist für die Bremsmotoren vom Typ BN_FD in den nachstehend aufgeführten spezifischen Details verfügbar:

(F46)

Eigenschaften der Schwungräder für Motoren typ: BN_FD, M_FD			
		**Gewicht Schwungrad** [Kg]	**Trägheitsmoment Schwungrad** [Kgm^2]
BN 63	**M05**	0.69	0.00063
BN 71	**M1**	1.13	0.00135
BN 80	**M2**	1.67	0.00270
BN 90 S - BN 90 L	**–**	2.51	0.00530
BN 100	**M3**	3.48	0.00840
BN 112	**–**	4.82	0.01483
BN 132 S - BN 132 M	**M4**	6.19	0.02580

M11.2 Kapazitiver filter

CF

Nur bei den Bremsmotoren mit Gleichstrombremse vom Typ BN_FD ist die Option eines kapazitiven Filters vorgesehen. Wird dieser Filter vor dem Gleichrichter (Option CF) installiert, fallen die Motoren in die vonder Norm EN61000-6-3:2007“ Elektromagnetische Kompatibilität – Allgemeine Normzur Emission – Teil 6-3: Wohngebiete, Handelsund Leichtindustriezonen“ vorgesehenen Emissionsgrenzen.

M11.3 Thermische wicklungsschutzeinrichtungen

Standardmäßig werden Motoren durch externe Motorschutzschalter gegen Überlastung geschützt. Optional können die Motoren mit integrierten Temperaturfühlern ausgestattet werden, die die Wicklung vor Überhitzung aufgrund einer unzureichenden Luftzufuhr oder bei Aussetzbetrieb schützen. Diese Option wird auch für Motoren mit Fremdlüftung dringend empfohlen (IC416).

M11.4 PTC-Thermistoren

E3

Hierbei handelt es sich um Halbleiter, die eine schnelle Änderung des Widerstands kurz vor der Nennansprechtemperatur (150 °C) aufweisen. Der Verlauf der Kennlinie R = f(T) ist durch die DIN-Normen 44081 und IEC 34-11 festgelegt. Im allgemeinen werden Thermistoren mit positivem Temperaturkoeffizienten verwendet, die unter der Bezeichnung PTC (Kaltleiter) bekannt sind. Die Thermistoren sind nicht in der Lage, die Relais direkt anzusteuern, und müssen deshalb an ein entsprechendes Auslösegerät angeschlossen werden. Die Anschlüsse der drei in den Wicklungen in Reihe geschalteten PTC-Widerstände sind an einer Zusatzklemmleiste verfügbar.

K1

Es handelt sich hierbei um eine Untergruppe der PTC-Thermistoren; ihre Baueigenschaften ermöglichen den Einsatz als Temperaturfühler, da sie einen positiven Temperaturkoeffizienten in Abhängigkeit vom Widerstand aufweisen.
Die Betriebstemperatur beträgt: 0°C ... +260°C.
Die Thermistoren sind nicht in der Lage, die Relais direkt anzusteuern, und müssen deshalb an ein entsprechendes Auslösegerät angeschlossen werden.
Die Anschlussklemmen (gepolt) von 1 KTY 84-130 sind in einer Hilfsklemmenleiste verfügbar.

M11.5 Bimetall-Temperaturfühler

D3

Diese Schutzeinrichtungen enthalten in einer Kaspel eine Bimetallscheibe, die bei Erreichen der Nennansprechtemperatur (150 °C) einen Schaltkontakt öffnet. Bei abnehmender Temperatur schließt dieser Kontakt wieder. Normalerweise werden die Öffnerkontakte von drei Bimetallfühlern in Reihe geschaltet und auf einer Zusatzklemmleiste zur Verfügung gestellt.

M11.6 Motor mit Verbinder

CON

Es stehen drei Verbindertypen (CON 1, CON 2, CON 3) zur Verfügung, die in zwei Einbaupositionen installiert werden können: rechte Seite des Klemmenkastens (C1D, C2D, C3D); linke Seite des Klemmenkastens (C1S, C2S, C3S).
Die CON-Option steht für die BN und M-Motoren mit einzelner Polarität (2, 4, 6, 8 Pole) und BX/BE und MX/ME je nach Größe wie in der folgenden Liste beschrieben zur Verfügung. Alle polumschaltbaren Motoren sind ausgenommen.
Die Verbinder sind für die BX-BE/MX-ME und BN/M in der Version ohne Bremse und für die BN und M-Bremsmotoren mit Gleichstrombremse FD in den Größen gemäß nachstehender Tabelle erhältlich.
Am Motor ist der (Stecker-) Verbinder (mit Stiften) befestigt, während der (Buchsen-) Verbinder nicht zum Lieferumfang zählt.
Mit der CON-Option ist stets der Y-Anschluss der Phasen vorgesehen.
Für die Fremdlüftermotoren (Option U1) ist der Anschluss zur Versorgung des Lüfters im separaten, an der Lüfterabdeckung befestigten Klemmenkasten vorgesehen.
Bei den Motoren mit Encoder (Optionen EN1...EN6) erfolgt der Anschluss des Encoders mit einem losen Kabel, das nicht am Verbinder angeschlossen ist.
Die CON-Option ist für die Motoren mit Wechselstrombremse FA nicht anwendbar.

Technische Daten

(F47)

Option	CON 1
Motor-Baugrosse	**BE 80 ... BE 112 / ME2, ME3 / BN 63 … BN 112 / M05 ... M3**
Ansicht des Verbinders	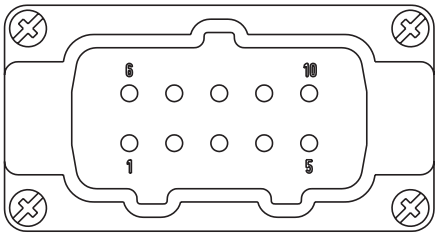
Verbindertyp	Harting Han 10ES
Verbindergehäuse	Han EMC 10B mit 2 Hebeln
Stiftanzahl - Nennstrom	10 x 16A
Versorgungsspannung	500 Vac
Anschlussart der Kontakte	Schraubklemmen

(F48)

Option	CON 2
Motor-Baugrosse	**BX 132 / BE 80 ... BE 132M / MX4 / ME4 / BN 63 … BN 132M / M05 ... M4L**
Ansicht des Verbinders	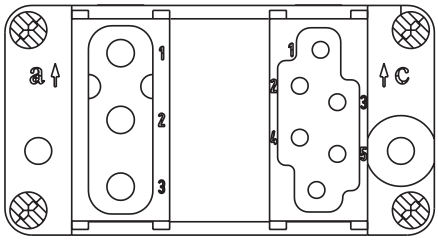
Verbindertyp	Harting Han Modular
Verbindergehäuse	Han EMC 10B mit 2 Hebeln
Modultyp	Modul C + Leeres Modul + Modul E
Stiftanzahl - Nennstrom	3 x 36A / 6 x 16A
Versorgungsspannung	500 Vac
Anschlussart der Kontakte	Crimpkontakte

(F49)

Option	CON 3
Motor-Baugrosse	**BX 132 / BE 80 ... BE 132M / MX4 / ME4 / BN 63 … BN 132M / M05 ... M4L**
Ansicht des Verbinders	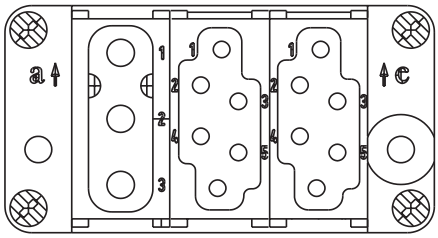
Verbindertyp	Harting Han Modular
Verbindergehäuse	Han EMC 10B mit 2 Hebeln
Modultyp	Modul C + Modul E + Modul E
Stiftanzahl - Nennstrom	3 x 36A / 6 + 6 x 16A
Versorgungsspannung	500 Vac
Anschlussart der Kontakte	Crimpkontakte

(F50)

Ausrichtung der Verbinder

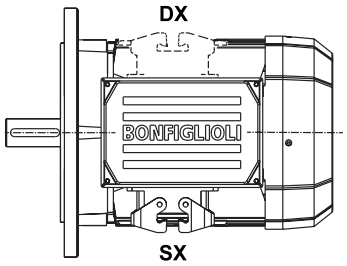

(F51)

Abmessungen der Motoren ohne Bremse

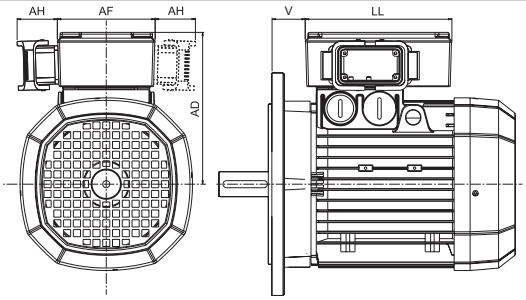

		AD (mm)	**AF** (mm)	**AH** (mm)	**LL** (mm)	**V**(*) (mm)
BN 63	**M05**	136	110	45	165	4.5
BN 71	**M1**	149	110	45	165	15.5
BE 80 - BN 80	**ME2 - M2**	160	110	45	165	16.5
BE 90 - BN 90	**–**	162	110	45	165	31.5
BE 100 - BN 100	**ME3 - M3**	171	110	45	165	37.5
BE 112 - BN 112	**–**	186	110	45	165	39
BX 132 - BE 132 - BN 132	**MX4 - ME4 - M4**	210	140	45	188	45.5
BN 160MR	**–**	210	140	45	188	161

(*) Dimension gilt nur für Motoren BX, BE und BN.

(F52)

Abmessungen der Motoren mit FD-Bremse

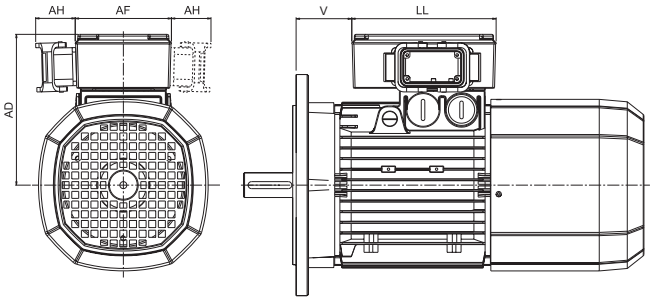

		AD (mm)	**AF** (mm)	**AH** (mm)	**LL** (mm)	**V**(*) (mm)
BN63	**M05**	136	110	45	165	4.5
BN71	**M1**	149	110	45	165	1.5
BN80	**M2**	160	110	45	165	18.5
BN90	**—**	162	110	45	165	39.5
BN100	**M3**	171	110	45	165	63.5
BN112	**—**	186	110	45	165	75
BN132	**M4**	210	140	45	188	122
BN160MR	**—**	210	140	45	188	161

(*) Dimension gilt nur für Motoren BN.

M11.7 Kontrolle der Funktionstüchtigkeit der Bremse

MSW

Der Mikroschalter kann entsprechend eingestellt werden, um das Anziehen / Lösen des beweglichen Ankers oder das Erreichen des zulässigen Höchstwerts für den Luftspalt zu melden.
Die MSW-Option ist für die Bremsen FD03...FD09 verfügbar.
Der Mikroschalter ist mit drei Anschlussklemmen NC, NO, COM versehen. In der nachfolgenden Zeichnung sind die wesentlichen Komponenten der mit Mikroschalter ausgestatteten Bremse dargestellt.

(F53)

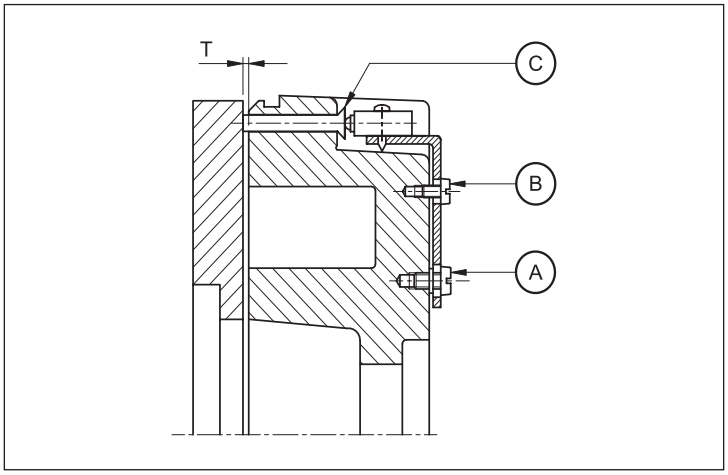

A: Befestigungsschrauben

B: Einstellschraube

C: Antrieb

M11.8 Zusätzlicher Kabeleingang für Bremsmotoren

IC

Am Klemmenkasten der Bremsmotoren BN63...BN160MR / M05...M4 sind zwei zusätzliche Kabeleingänge M16 x 1,5 verfügbar (einer pro Seite).
Am Klemmenkasten der Bremsmotoren BN160...BN200 / M5 ist ein zusätzlicher Kabeleingang M16 x 1,5 neben dem Eingang des Bremskabels verfügbar.

M11.9 Wicklungsheizung

H1 **NH1**

Die Motoren, die in besonders feuchten Umgebungen und/oder unter starken Temperaturschwankungen eingesetzt werden, können mit einem Heizelement als Kondenwasserschutz ausgestattet werden.
Die einphasige Versorgung erfolgt über eine Zusatzklemmleiste, die sich im Klemmkasten befindet.
Werte fuer die Leistungsaufnahme sind in folgender Tabelle aufgeführt.

(F54)

	H1	NH1
	1~ 230V ± 10% P [W]	1~ 115V ± 10% P [W]
BE 80 **BN 56 ... BN 80**	10	10
BX 132 **BE 90 ... BE 132MB** **BN 90 ... BN 160MR**	25	25
BX 160, BX 180 **BE 160, BE 180** **BN 160, BN 200**	50	50

Warnung!
Während des Motorbetriebs darf die Wicklungsheizung nie in Betrieb sein.

M11.10 Tropenschutz

TP

Wird die Option **TP** bestellt, wird die Motorwicklung mit einem zusätzlichen Schutz ausgestattet, der ihren Einsatz unter hohen Temperaturen und starker Feuchtigkeit ermöglicht.

M11.11 Zweites Wellenende

PS

Diese Option schließt die Optionen RC, TC, U1, U2, EN1, EN2, EN3, EN4, EN5, EN6. Die entsprechenden Abmessungen können den Maßtabellen der Motoren entnommen werden.

(F55)

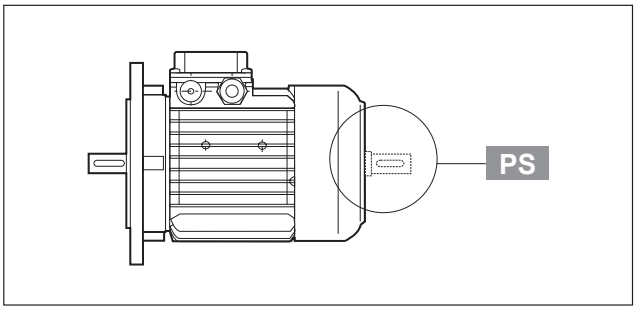

M11.12 Rücklaufsperre

AL **AR**

Wenn ein durch die Last verursachtes Zurückdrehen des Motors verhindert werden soll, kann eine Rücklaufsperre integriert werden (nur bei Serie MX/ME und M verfügbar). Diese Vorrichtung, die eine völlig ungehinderte Drehung des Motors in Laufrichtung gestattet, greift sofort ein, wenn die Spannung fehlt, und verhindert die Drehung der Welle in die Gegenrichtung. Die Rücklaufsperre verfügt über eine Dauerschmierung mit einem speziell für diese Anwendung geeignetem Fett. Bei der Bestellung muss die vorgesehene Drehrichtung des Motors angegeben werden.
Die Rücklaufsperre darf keinesfalls verwendet werden, um im Falle eines fehlerhaften elektrischen Anschlusses die Drehung in die Gegenrichtung zu verhindern. In Tabelle (F56) sind die Nenn- und Höchstdrehmomente für die verwendeten Rücklaufsperren angegeben; Abbildung (F57) zeigt eine schematische Darstellung der Vorrichtung. Die Abmessungen sind ähnlich denen der Bremsmotoren. Die Richtungsangabe der freien Rotation ist in dem Getriebeteil des Katalogs unter dem Abschnitt „OPTIONEN MOTOREN“ beschrieben.

(F56)

	Nenndrehmoment der Sperre [Nm]	Max. Drehmo-ment der Sperre [Nm]	Ausrückge-schwindigkeit [min^{-1}]
M1	6	10	750
ME2 M2	16	27	650
ME3 M3	54	92	520
MX4 - ME4 M4	110	205	430

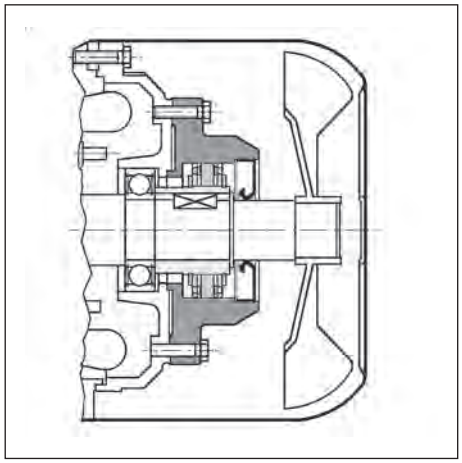

M11.13 Rotorauswchtung

RV

Sollte eine besondere Laufruhegefordert werden, steht als Option RV eine Ausführung mit reduziertem Schwingverhalten nach Grad B, zur Verfügung.
Die folgende Tabelle gibt die Werte der effektive Schwingungen für das normale Auswuchten (A) und im Grad B an.

Diese Werte beziehen sich auf einem frei hängenden und sich im Leerbetrieb befindlichenMotor; Toleranz ±10%.

(F57)

Vibrationlevel	Winkelgeschwindigkeit n [min^{-1}]	Grenzen der Schwingungsstärke (mm/s) **BX 132 ≤ H ≤ BX 180L** **BE 80 ≤ H ≤ BE 180L** **BN 56 ≤ H ≤ BN 200**
A	600 < n < 3600	1.6
B	600 < n < 3600	0.70

M11.14 Belüftung

Die Motoren werden mittels Eigenbelüftung gekühlt (IC 411 gemäss CEI EN 60034-6) und sind mit einem Radiallüfterrad aus Kunststoff ausgestattet, welches in beiden Drehrichtungen wirksam ist. Bei der Montage des Motors muss darauf geachtet werden, dass zwischen Lüfterhaube und dem nächsten Bauteil ein Mindestabstand eingehalten wird, um die Luftzirkulation nicht zu beeinträchtigen. Dieser Abstand ist ebenso für die regelmäßige Wartung des Motors und, falls vorhanden, der Bremse erforderlich. Ab der Baugröße BN 71 und M1 können die Motoren auf Anfrage mit einem unabhängig gespeisten Fremdlüfter geliefert werden. Die Kühlung erfolgt hier durch einen Axialventilator, der an Stelle der Standardlüfterhaube (Kühlmethode IC 416) montiert wird.
Diese Ausführung sollte eingesetzt werden, falls der Motor über einen Frequenzumrichter auch bei kleinen Drehzahlen mit Nennmoment betrieben wird oder bei hoher Schalthäufigkeit.
Von dieser Option ausgeschlossen sind die Motoren mit zweitem Wellenende (Option PS).

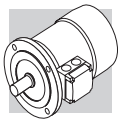

Für diese Option sind als Alternative zwei Ausführungen verfügbar: **U1** und **U2** mit gleichen Längenmaßen. Für beide Ausführungen wird die Verlängerung der Lüfterhaube (**DL**) in der nachstehenden Tabelle angegeben.
Die Gesamtmaße der Motoren können den Tabellen mit den Motormaßen entnommen werden.

(F58)

Tabelle - Motorverlängerung			
		Δ L_1	**Δ L_2**
BN 71	**M1**	184	–
BE 80 - BN 80	**ME2 - M2**	93	32
BE 90 - BN 90	**–**	127	55
BE 100 - BN 100	**ME3 - M3**	131	48
BE 112 - BN 112	**–**	119	28
BX - 132 - BE 132 - BN 132	**MX4 - ME4 - M4**	130	31
BX 160 - BE 160, BX 180 - BE, 180	**MX5 - ME5**	161	51

ΔL_1 = Maßänderung gegenüber Maß LB des entsprechenden Standardmotors.

ΔL_2 = Maßänderung gegenüber Maß LB des entsprechenden Bremsmotors. Nur für Motoren BN.

U1

Versorgungsanschlüsse des Ventilators befinden sich im Zusatzklemmkasten.
Bei den Bremsmotoren in der Baugröße BN 71 ... BN 160MR, M1 ... M4L, mit Option **U1**, kann der Bremslüfthebel nicht in der Position AA stehen. Die Option ist nicht verfügbar für die Motoren entsprechend den Normen CSA und UL (Option CUS).

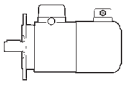

(59)

		V a.c. ±10%	**Hz**	**P** [W]	**I** [A]
BN 71	**M1**	1 ~ 230	50 / 60	22	0.12
BE 80 **BN 80**	**ME2** **M2**			22	0.12
BE 90 **BN 90**	**–**			40	0.30
BE 100 **BN 100**	**ME3** **M3**			50	0.25
BE 112 **BN 112**	**–**	3 ~ 230Δ / 400Y		50	0.26 / 0.15
BX 132 - BE 132 **BN 132 ... BN 160MR**	**MX4 - ME4** **M4L**			110	0.38 / 0.22
BX 160 - BE 160 **BN 160M ... BN 180M**	**MX5 - ME5** **M5**		50	180	1.25 / 0.72
BX 180 - BE 180 **BN 180L ... BN 200L**	**–**			250	1.51 / 0.87

U2

Versorgungsanschlüsse des Ventilators befinden sich im Hauptklemmkasten des Motors.
Die Option **U2** ist nicht verfügbar für die Motoren BX, BE, MX, ME und nicht für Motoren mit CUS-Option (entsprechend den Normen CSA und UL).

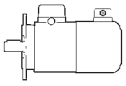

(60)

		V a.c. ±10%	Hz	P [W]	I [A]
BN 71	**M1**	1 ~ 230	50 / 60	22	0.12
BN 80	**M2**			22	0.12
BN 90	**–**			40	0.30
BN 100	**M3**	3 ~ 230Δ / 400Y		40	0.26 / 0.09
BN 112	**–**			50	0.26 / 0.15
BN 132 ... BN 160MR	**M4L**			110	0.38 / 0.22

M11.15 Regenschutzdach

RC

Das Regenschutzdach RC wird empfohlen, wenn der Motor senkrecht mit einer nach unten gerichteten Welle montiert wird. Es dient dem Schutz des Motors vor dem Eindringen von festen Fremdkörpern und Tropfwasser. Die Abmessungen werden in der folgende Tabelle angegeben. Die Schutzdachoption schließt die Möglichkeit der Optionen PS, EN1, EN2, EN3, EN4, EN5, EN6.

(61)

		AQ	ΔV
BN 63	**M05**	118	24
BN 71	**M1**	134	27
BE 80 **BN 80**	**ME2** **M2**	152	25
BE 90 **BN 90**	**—** **—**	168	30
BE 100 **BN 100**	**ME3** **M3**	190	28
BE 112 **BN 112**	**—** **—**	211	32
BX 132 - BE 132 **BN 132...BN 160MR**	**MX4 - ME4** **M4**	254	32
BX 160 - BE 160 **BN 160M...BN 180M**	**MX5 - ME5** **M5**	302	36
BX 180 - BE 180 **BN 180L...BN 200L**	**—** **—**	340	36

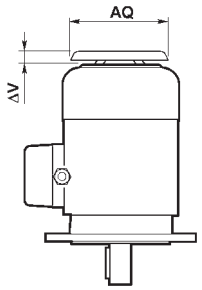

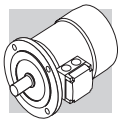

M11.16 Textilschutzdach

TC

Bei der Option TC handelt es sich um ein Schutzdach mit einem Textilnetz, dessen Einsatz empfohlen wird, wenn der Motor in Bereichen der Textilindustrie installiert wird, in denen Stofffusseln das Lüfterradgitter verstopfen und so einen ausreichenden Kühlluftfluss verhindern könnten. Diese Option schließt die Möglichkeit der Optionen EN1, EN2, EN3, EN4, EN5, EN6, PS, U1, U2. Die Gesamtmaße entsprechen denen des Schutzdachs vom Typ RC.

M11.17 Drehgeberanschluss

Die Motoren können mit sechs unterschiedlichen Encodertypen ausgestattet werden. Nachstehend finden Sie die entsprechenden Beschreibungen. Die Montage eines Encoders schließt die Version mit zweitem Wellenende (PS) und Schutzdach (RC, TC) aus.

EN1

Inkremental-Encoder, V_{IN} = 5 V, Ausgang „line-driver“ RS 422.

EN2

Inkremental-Encoder, V_{IN} = 10-30 V, Ausgang „line-driver“ RS 422

EN3

Inkremental-Encoder, V_{IN} = 12-30 V, Ausgang „push-pull“ 12-30 V

EN4

Encoder sin/cos, V_{IN} = 4,5-5,5 V, Sinus-Ausgang 0,5 V_{PP}.

EN5

Absolut-Encoder mit Einzelwindung, Schnittstelle HIPERFACE®, V_{IN} = 7-12 V.

EN6

Absolut-Encoder mit Mehrfachwindung, Schnittstelle HIPERFACE®, V_{IN} = 7-12 V.

(F62)

		EN1	EN2	EN3	EN4	EN5	EN6
Schnittstelle		TTL/RS 422	TTL/RS 422	HTL/push-pull	Sinus 0.5 VPP	HIPERFACE®	HIPERFACE®
Versorgungsspannung	[V]	4...6	10...30	12...30	4.4...5.5	7...12	7...12
Ausgangsspannung	[V]	5	5	12...30	—	—	—
Betriebsstrom ohne Belastung	[mA]	120	100	100	40	80	80
Impulse pro Drehung		1024					
Positionenpro Umdrehung		—	—	—	—	15 bit	15 bit
Revolutionen		—	—	—	—	—	12 bit
Signale		6 (A, B, Z + invertierte Signale)			6 (cos-, cos+, sin-, sin+, Z, $\overline{Z}$)	—	—
Max. Ausgangsfrequenz	[kHz]	600			200		
Max. Drehzahl	[min^{-1}]	6000 (9000 min^{-1} für 10 s)					
Temperaturbereich	[°C]	-30 ... +100					
Schutzgrad		IP 65					

(F63)

EN1, EN2, EN3, EN4, EN5, EN6	
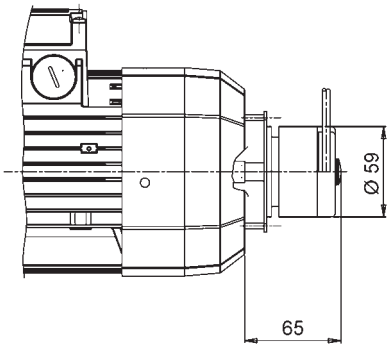	
BX 132 ... BX 180L **BE 80 ... BE 180L**	**MX2 ... MX5L** **ME2S ... ME5L**
BN 63 ... BN 200L	**M05 ... M5**
BN 63_FD ... BN 200L_FD	**M05_FD ... M5_FD**
BN 63_FA ... BN 200L_FA	**M05_FA ... M5_FA**

(F64)

EN_ + U1		
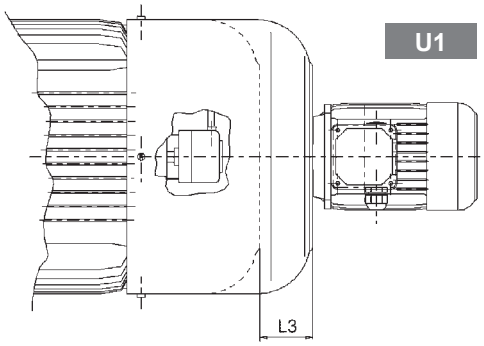		
		L3
BX 160 - BE 160 - BN 160M...BN 180M	**MX5 - ME5 - M5**	72
BX 180 - BE 180 - BN 180L...BN 200L	**–**	82
BN 160M_FD...BN 180M_FD	**M5_FD**	35
BN 180L_FD...BN 200L_FD	**–**	41

Wenn der Encoder (Option EN_) für Motoren der Baugrößen BE80B … BX/BE132MB , ME2 … MX/ME4 - BN71...BN160MR , M1 … M4 zusammen mit Fremdlüftung (Optionen U1, U2) ausgelegt ist, stimmen die Maßänderungen des Motors mit jenen der entsprechenden Ausführungen U1 und U2 überein.

M11.18 Oberflächenschutz

C_

Wenn keine besondere Korrosionsschutzklasse gefordert ist, ist die lackierte Oberfläche des Motoren mindestens mit einem Schutz gegen Korrosion der Klasse C2 nach UNI EN ISO 12944-2 geschützt. Für eine bessere Witterungsbeständigkeit können die Motor durch eine Lackierung mit einem Oberflächenschutz der Klassen C3 und C4 geliefert werden.

(F65)

OBERFLÄ-CHENSCHUTZ	Typische Umgebungen	Maximale Ober-flächen-temperatu	Korrosionsschutzklasse nach UNI EN ISO 12944-2
C3	Stadt- und Industrieumgebung mit bis zu 100% relativer Luftfeuchtig-keit (mittlere Luftverschmutzung)	120°C	C3
C4	Industrie- und Küstengebiete und Chemieanlagen mit bis zu 100% relativer Luftfeuchtigkeit (hohe Luftverschmutzung)	120°C	C4

Die Motoren mit einem optionalen Korrosionsschutz der Klassen C3 oder C4 sind in einer Auswahl von Farben verfügbar. Wenn keine spezielle Farbe gefordert ist, (siehe Option „Lackierung“) ist der Decklack in RAL 7042.
Unsere Motor können auch mit Oberflächenschutz der Klasse C5 nach UNI EN ISO 12944-2 versehen werden. Für weitere technische Informationen wenden Sie bitte an unseren Technischen Service.

M11.19 Lackierung

RAL

Die Motoren mit Oberflächenschutz der Klasse C3 oder C4, sind in den, in der folgenden Liste aufgelisteten Farben, verfügbar.

(F66)

LACKIERUNG	Farbe	RAL Nummer
RAL7042*	Traffic Grey A	7042
RAL5010	Gentian Blue	5010
RAL9005	Jet Black	9005
RAL9006	White Aluminium	9006
RAL9010	Pure White	9010

* Die Getriebe werden in dieser Standardfarbe geliefert, wenn keine andere Farbe angegeben ist.

Hinweis – Die Option “Lackierung” kann nur im Zusammenhang mit dem Oberflächenschutz spezifiziert werden.

M11.20 Nachweise

ACM

Konformitätsbescheinigung von Motoren Dokument mit dessen Ausstellung die Konformität des Produkts mit dem Auftrag, und dessen Konstruktion in Konformität mit den vom Qualitätsmanagementsystem von Bonfiglioli Riduttori vorgesehenen Standardfertigungs- und -kontrollverfahren bescheinigt wird.

CC

Prüfzeugnis
Die Bestellung führt zur Durchführung von Kontrollen der Konformität mit dem Auftrag, allgemeinen Sichtkontrollen und instrumentalen Prüfung der elektrischen Eigenschaften in unbelasteten Bedingungen. Die Prüfung wird anhand einer Stichprobe des Versandloses durchgeführt.

M12 TABELLE MOTORZUORDNUNG

(F67)

2 poligen							
Wirkungsgradklasse		IE1	IE2	IE3	IE1	IE2	IE3
Pn [kW]	0.06						
	0.09						
	0.12						
	0.18	BN 63A 2			M 05A 2		
	0.25	BN 63B 2			M 05B 2		
	0.37	BN 71A 2			M 05C 2		
	0.55	BN 71B 2			M 1SD 2		
	0.75	BN 71C 2	BE 80A 2		M 1LA 2	ME 2SA 2	
		BN 80A 2					
	1.1	BN 80B 2	BE 80B 2		M 2SA 2	ME 2SB 2	
	1.5	BN 90SA 2	BE 90SA 2		M 2SB 2		
	1.85	BN 90SB 2					
	2.2	BN 90L 2	BE 90L 2		M 3SA 2		
	3	BN 100L 2	BE 100L 2		M 3LA 2	ME 3LB 2	
	4	BN 112M 2	BE 112M 2		M 3LB 2		
	5.5	BN 132SA 2	BE 132SA 2		M 4SA 2	ME 4SA 2	
	7.5	BN 132SB 2	BE 132SB 2		M 4SB 2	ME 4LA 2	
	9.2	BN 132M 2	BE 132MB 2		M 4LA 2	ME 4LB 2	
	11	BN 160MR 2	BE 160MA 2		M 4LC 2	ME 5SA 2	
		BN 160M 2					
	15	BN 160MB 2	BE 160MB 2		M 5SB 2	ME 5SB 2	
	18.5	BN 160L 2	BE 160L 2		M 5SC 2	ME 5LA 2	
	22	BN 180M 2			M 5LA 2		
	30	BN 200LA 2					

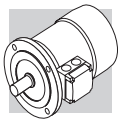

(F68)

4 poligen							
Wirkungsgradklasse		**IE1**	**IE2**	**IE3**	**IE1**	**IE2**	**IE3**
Pn [kW]	**0.06**	BN 56A 4					
	0.09	BN 56B 4			M 0B 4		
	0.12	BN 63A 4			M 05A 4		
	0.18	BN 63B 4			M 05B 4		
	0.25	BN 63C 4			M 05C 4		
		BN 71A 4					
	0.37	BN 71B 4			M 1SD 4		
	0.55	BN 71C 4			M 1LA 4		
		BN 80A 4					
	0.75	BN 80B 4	BE 80B 4		M 2SA 4	ME 2SB 4	
	1.1	BN 80C 4	BE 90S 4		M 2SB 4	ME 3SA 4	
		BN 90S 4					
	1.5	BN 90LA 4	BE 90LA 4		M 3SA 4	ME 3SB 4	
	1.85	BN 90LB 4					
	2.2	BN 100LA 4	BE 100LA 4		M 3LA 4	ME 3LA 4	
	3	BN 100LB 4	BE 100LB 4		M 3LB 4	ME 3LB 4	
	4	BN 112M 4	BE 112M 4		M 3LC 4	ME 4SA 4	
	5.5	BN 132S 4	BE 132S 4	BX 132SB 4	M 4SA 4	ME 4SB 4	MX 4SB 4
	7.5	BN 132MA 4	BE 132MA 4	BX 132MA 4	M 4LA 4	ME 4LA 4	MX 4LA 4
	9.2	BN 132MB 4	BE 132MB 4	BX 160MA 4	M 4LB 4	ME 4LB 4	MX 5SA 4
	11	BN 160MR 4	BE 160M 4	BX 160MB 4	M 4LC 4	ME 5SA 4	MX 5SB 4
		BN 160M 4					
	15	BN 160L 4	BE 160L 4	BX 160L 4	M 5SB 4	ME 5LA 4	MX 5LA 4
	18.5	BN 180M 4	BE 180M 4	BX 180M 4	M 5LA 4		
	22	BN 180L 4	BE 180L 4	BX 180L 4			
	30	BN 200L 4					

(F69)

6 poligen							
Wirkungsgradklasse		**IE1**	**IE2**	**IE3**	**IE1**	**IE2**	**IE3**
Pn [kW]	**0.06**						
	0.09	BN 63A 6			M 05A 6		
	0.12	BN 63B 6			M 05B 6		
	0.18	BN 71A 6			M 1SC 6		
	0.25	BN 71B 6			M 1SD 6		
		BN 71C 6					
	0.37	BN 80A 6			M 1LA 6		
	0.55	BN 80B 6			M 2SA 6		
	0.75	BN 80C 6	BE 90S 6		M 2SB 6		
		BN 90S 6					
	1.1	BN 90L 6			M 3SA 6		
	1.5	BN 100LA 6	BE 100LA 6		M 3LA 6	ME 3LB 6	
	1.85	BN 100LB 6			M 3LB 6		
	2.2	BN 112M 6	BE 112M 6		M 3LC 6		
	3	BN 132S 6	BE 132S 6		M 4SA 6	ME 4SB 6	
	4	BN 132MA 6	BE 132MA 6		M 4LA 6	ME 4LA 6	
	5.5	BN 132MB 6	BE 160MA 6		M 4LB 6	ME 5SA 6	
	7.5	BN 160M 6	BE 160MB 6		M 5SA 6	ME 5SB 6	
	9.2						
	11	BN 160L 6			M 5SB 6		
	15	BN 180L 6					
	18.5	BN 200LA 6					
	22						
	30						

M13 MOTORENAUSWAHLTABELLEN BX-MX

4 P	1500 min^{-1} - S1	50 Hz - IE3

P_n kW			n min^{-1}	M_n Nm	In 400V A	η% 100%	η% 75%	η% 50%	cos φ	I_s/I_n	M_s/M_n	M_a/M_n	J_m x 10^{-4} kgm^2	IM B5 Kg
5.5	**BX 132SB**	**4**	1470	36	11.5	89.6	89.2	87.3	0.77	6.6	2.9	2.9	310	57
7.5	**BX 132MA**	**4**	1460	49	15.0	90.4	90.9	90.2	0.80	7.9	3.4	3.0	360	67
9.2	**BX 160MA**	**4**	1465	60	18.3	91.0	91.4	90.6	0.80	6.1	2.5	2.2	650	95
11	**BX 160MB**	**4**	1465	72	20.9	91.4	92.3	92.0	0.83	6.4	2.5	2.3	780	110
15	**BX 160L**	**4**	1465	98	28.3	92.1	92.7	92.4	0.83	6.7	2.5	2.1	890	121
18.5	**BX 180M**	**4**	1473	120	33.2	92.6	93.3	92.4	0.86	10.4	2.5	2.9	1560	155
22	**BX 180L**	**4**	1474	143	39.0	93.0	93.3	92.6	0.87	10.0	2.1	2.6	1660	163

4 P	1500 min^{-1} - S1	50 Hz - IE3

P_n kW			n min^{-1}	M_n Nm	In 400V A	η% 100%	η% 75%	η% 50%	cos φ	I_s/I_n	M_s/M_n	M_a/M_n	J_m x 10^{-4} kgm^2	IM B9 Kg
5.5	**MX 4SB**	**4**	1470	36	11.5	89.6	89.2	87.3	0.77	6.6	2.9	2.9	310	55
7.5	**MX 4LA**	**4**	1460	49	15.0	90.4	90.9	90.2	0.80	7.9	3.4	3.0	360	65
9.2	**MX 5SA**	**4**	1465	60	18.3	91.0	91.4	90.6	0.80	6.1	2.5	2.2	650	79
11	**MX 5SB**	**4**	1465	72	20.9	91.4	92.3	92.0	0.83	6.4	2.5	2.3	780	96
15	**MX 5LA**	**4**	1465	98	28.3	92.1	92.7	92.4	0.83	6.7	2.5	2.1	890	107

BX - IM B5

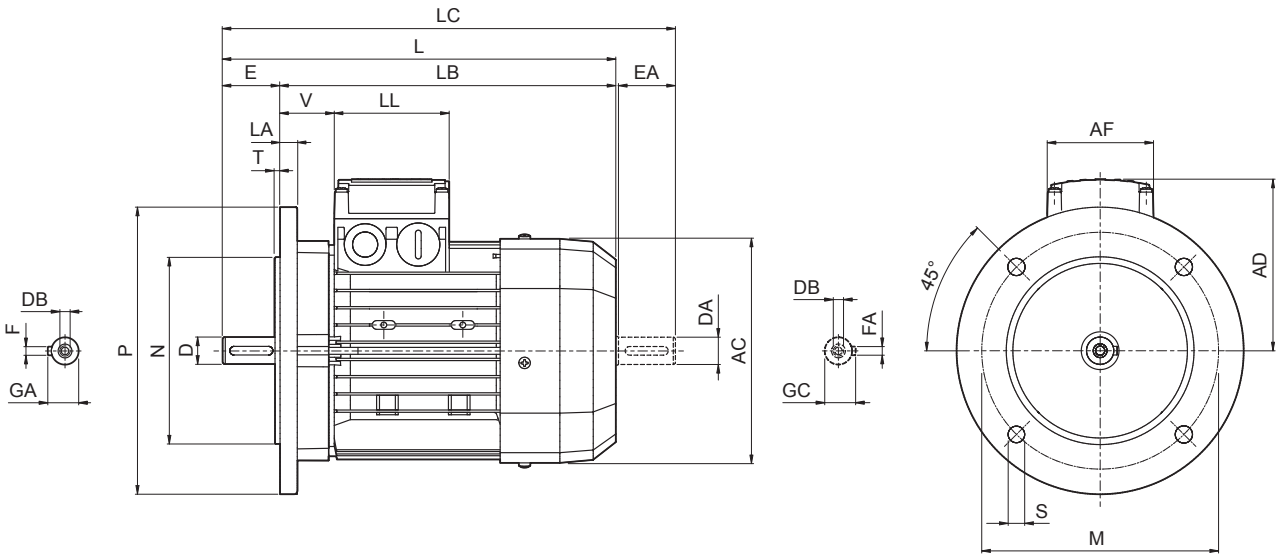

	Welle					Flansch						Motor							
	D DA	**E EA**	**DB**	**GA GC**	**F FA**	**M**	**N**	**P**	**S**	**T**	**LA**	**AC**	**L**	**LB**	**LC**	**AD**	**AF**	**LL**	**V**
BX 132 SB	38 28(1)	80 60(1)	M12 M10(1)	41 31(1)	10 8(1)	265	230	300	14	4	16	258	493	413	556	193	118	118	58
BX 132 MA													528	448	591				
BX 160 MA	42 38(1)	110 80(1)	M16 M12(1)	45 41(1)	12 10(1)	300	250	350	18.5	5	15	310	596	486	680	245	187	187	51
BX 160 MB													640	530	724				
BX 160 L																			
BX 180 M	48 42(1)	110 110(1)	M16 M16(1)	51.5 45(1)	14 12(1)						18	348	708	598	823	261			52
BX 180 L																			

HINWEIS:
1) Diese Maße betreffen das zweite Wellenende.

MX

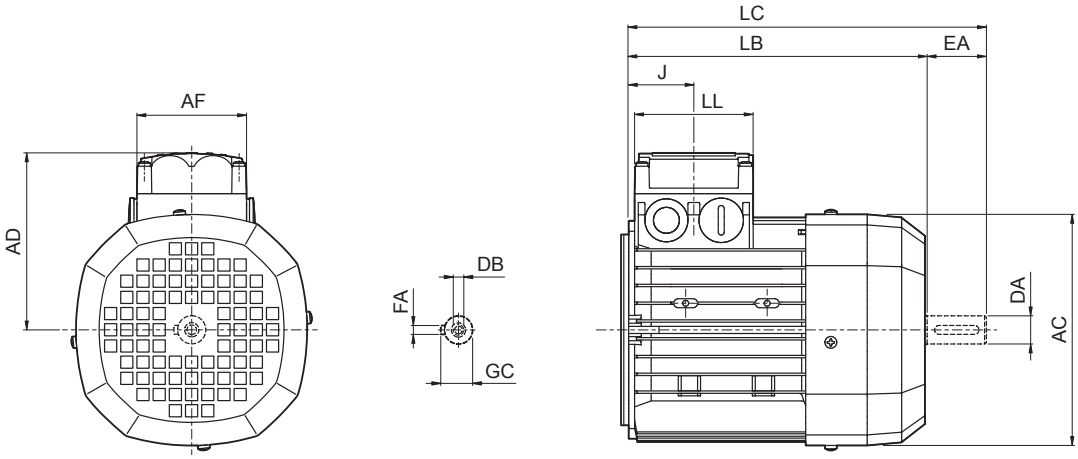

	Zweite Wellenende					Motor						
	DA	**EA**	**DB**	**FA**	**GC**	**AC**	**LB**	**LC**	**AF**	**LL**	**J**	**AD**
MX 4SB	28	60	M10	8	31	258	361	424	118	118	64.5	193
MX 4LA							396	459				
MX 5SA	38	80	M12	10	41	310	418	502	187	187	77	245
MX 5SB							462	546				
MX 5LA												

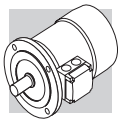

M15 MOTORENAUSWAHLTABELLEN BE-ME

BE-ME

2 P	3000 min^{-1} - S1	50 Hz - IE2

P_n kW			n min^{-1}	M_n Nm	In 400V A	η% 100%	75%	50%	cos φ	I_s/I_n	M_s/M_n	M_a/M_n	J_m x 10^{-4} kgm^2	IM B5 Kg
0.75	**BE 80A**	**2**	2860	2.5	1.65	80.0	79.6	76.4	0.83	6.8	3.8	3.5	9.0	9.5
1.1	**BE 80B**	**2**	2845	3.7	2.35	81.5	82.2	79.9	0.83	6.9	3.8	3.1	11.4	11.3
1.5	**BE 90SA**	**2**	2865	5.0	3.2	81.3	80.7	78.1	0.82	6.8	3.6	2.8	12.5	12.3
2.2	**BE 90L**	**2**	2870	7.3	4.7	83.2	83.1	80.8	0.82	6.9	3.1	2.9	16.7	14
3	**BE 100L**	**2**	2880	9.9	6.2	84.6	84.6	83.7	0.83	7.3	3.5	3.1	39	23
4	**BE 112M**	**2**	2920	13.1	8.2	85.8	85.5	84.3	0.82	7.9	3.5	3.1	57	28
5.5	**BE 132SA**	**2**	2925	18.0	10.6	87.0	85.0	81.7	0.86	8.5	3.6	3.3	145	42
7.5	**BE 132SB**	**2**	2935	24	14.3	88.1	87.4	84.7	0.86	8.8	3.9	3.6	178	53
9.2	**BE 132MB**	**2**	2920	30	16.4	88.8	86.5	84.2	0.91	8.4	3.7	3.3	210	65
11	**BE 160MA**	**2**	2940	36	20.0	89.4	89.5	88.0	0.89	8.1	3.0	2.9	340	84
15	**BE 160MB**	**2**	2950	49	27.2	90.5	90.5	89.5	0.88	8.5	3.0	2.8	420	97
18.5	**BE 160L**	**2**	2945	60	32	90.9	90.5	89.8	0.91	7.7	2.9	2.7	490	109

4 P	1500 min^{-1} - S1	50 Hz - IE2

P_n kW			n min^{-1}	M_n Nm	In 400V A	η% 100%	75%	50%	cos φ	I_s/I_n	M_s/M_n	M_a/M_n	J_m x 10^{-4} kgm^2	IM B5 Kg
0.75	**BE 80B**	**4**	1430	5.0	1.65	81.0	80.5	78.0	0.81	6.1	3.2	3.0	28	12.2
1.1	**BE 90S**	**4**	1430	7.4	2.53	82.5	82.0	79.5	0.76	6.3	2.9	2.8	28	13.6
1.5	**BE 90LA**	**4**	1430	10.0	3.5	83.5	83.0	80.0	0.74	5.9	3.1	3.0	34	15.1
2.2	**BE 100LA**	**4**	1430	14.7	4.9	85.4	85.0	84.0	0.76	5.8	3.0	2.8	54	22
3	**BE 100LB**	**4**	1420	20	6.6	85.5	86.0	85.5	0.77	5.9	2.8	2.6	61	24
4	**BE 112M**	**4**	1440	27	8.3	87.0	87.0	86.0	0.80	6.5	2.8	2.8	105	32
5.5	**BE 132S**	**4**	1460	36	11.1	88.5	88.5	87.5	0.81	7.3	2.9	2.9	270	53
7.5	**BE 132MA**	**4**	1460	49	14.8	89.0	89.0	88.5	0.82	6.9	2.9	2.8	319	59
9.2	**BE 132MB**	**4**	1460	60	18.1	89.5	89.5	88.5	0.82	6.9	2.9	3.0	360	70
11	**BE 160M**	**4**	1465	72	21.5	91.0	91.3	90.5	0.81	6.5	2.8	2.6	650	99
15	**BE 160L**	**4**	1465	98	28.7	90.8	91.0	90.5	0.83	6.5	2.6	2.3	790	115
18.5	**BE 180M**	**4**	1465	121	35	91.6	92.0	91.3	0.83	6.5	2.6	2.5	1250	135
22	**BE 180L**	**4**	1465	143	41	91.6	91.8	91.4	0.84	6.8	2.7	2.6	1650	157

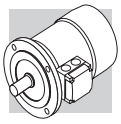

6 P	1000 min^{-1} - S1	50 Hz - IE2

P_n kW		n min^{-1}	M_n Nm	In 400V A	η% 100%	η% 75%	η% 50%	cos φ	I_s/I_n	M_s/M_n	M_a/M_n	J_m x 10^{-4} kgm^2	IM B5 Kg
0.75	**BE 90S 6**	935	7.7	2.06	75.9	75.9	73.0	0.69	5.1	3.1	2.9	33	15
1.1	**BE 100M 6** (*)	945	11.1	2.75	78.1	76.2	73.0	0.74	4.9	2.2	1.9	82	22
1.5	**BE 100LA 6**	945	15.2	3.9	79.8	77.5	74.0	0.72	5.6	2.5	2.3	95	24
2.2	**BE 112M 6**	950	22	5.2	81.8	81.8	79.3	0.74	5.2	2.6	2.3	168	32
3	**BE 132S 6**	955	30	6.6	83.3	83.3	82.4	0.79	6.1	2.1	1.9	295	44
4	**BE 132MA 6**	965	40	8.7	84.6	85.0	83.1	0.79	6.9	2.2	2.0	383	56
5.5	**BE 160MA 6** (*)	965	54	11.6	87.0	87.0	86.4	0.79	6.6	2.5	2.3	740	83
7.5	**BE 160MB 6** (*)	965	74	15.0	88.0	88.0	87.2	0.82	6.6	2.3	2.1	970	103

(*) Das Verhältnis Leistung / Größe ist nicht genormt

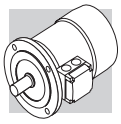

2 P	3000 min^{-1} - S1	50 Hz - IE2

P_n kW			n min^{-1}	M_n Nm	In 400V A	η% 100%	η% 75%	η% 50%	cos φ	I_s/I_n	M_s/M_n	M_a/M_n	J_m x 10^{-4} kgm^2	IM B9 Kg
0.75	**ME 2SA**	**2**	2860	2.5	1.63	80.0	79.6	76.4	0.83	6.8	3.8	3.5	9.0	8.8
1.1	**ME 2SB**	**2**	2845	3.7	2.35	81.5	82.2	79.9	0.83	6.9	3.8	3.1	11.4	10.6
1.5	**ME 3SA**	**2**	2845	5.0	3.2	81.3	79.0	76.0	0.84	6.1	2.9	2.7	24	15.5
2.2	**ME 3LA**	**2**	2895	7.3	4.8	83.2	83.2	81.5	0.80	6.3	2.7	2.5	31	18.7
3	**ME 3LB**	**2**	2880	9.9	6.2	84.6	84.6	83.7	0.83	7.3	3.5	3.1	39	22
4	**ME 4SA**	**2**	2900	13.2	7.8	85.8	84.5	82.2	0.87	7.0	2.9	2.8	101	33
5.5	**ME 4SB**	**2**	2925	18.0	10.6	87.0	85.0	81.7	0.86	8.5	3.6	3.3	145	40
7.5	**ME 4LA**	**2**	2935	24	14.3	88.1	87.4	84.7	0.86	8.8	3.9	3.6	178	51
9.2	**ME 4LB**	**2**	2920	30	16.4	88.8	86.5	84.2	0.91	8.4	3.7	3.3	210	60
11	**ME 5SA**	**2**	2940	36	20.0	89.4	89.5	88.0	0.89	8.1	3.0	2.9	340	70
15	**ME 5SB**	**2**	2950	49	27.2	90.5	90.5	89.5	0.88	8.5	3	2.8	420	83
18.5	**ME 5LA**	**2**	2945	60	32	90.9	90.5	89.8	0.91	7.7	2.9	2.7	490	95

4 P	1500 min^{-1} - S1	50 Hz - IE2

P_n kW			n min^{-1}	M_n Nm	In 400V A	η% 100%	η% 75%	η% 50%	cos φ	I_s/I_n	M_s/M_n	M_a/M_n	J_m x 10^{-4} kgm^2	IM B9 Kg
0.75	**ME 2SB**	**4**	1430	5.0	1.65	81.0	80.5	78.0	0.81	6.1	3.2	3	28	10.9
1.1	**ME 3SA**	**4**	1430	7.4	2.60	82.5	82.0	79.0	0.74	5.5	2.5	2.8	34	15.5
1.5	**ME 3SB**	**4**	1420	10.1	3.48	84.0	84.0	83.0	0.74	6.2	2.9	2.9	40	17
2.2	**ME 3LA**	**4**	1430	14.7	4.89	85.4	85.0	84.0	0.76	5.8	3	2.8	54	21
3	**ME 3LB**	**4**	1420	20	6.58	85.5	86.0	85.5	0.77	5.9	2.8	2.6	61	23
4	**ME 4SA**	**4**	1440	27	8.25	87.5	86.8	84.0	0.80	7.1	3.0	3.1	213	42
5.5	**ME 4SB**	**4**	1460	36	11.07	88.5	88.5	87.5	0.81	7.3	2.9	2.9	270	51
7.5	**ME 4LA**	**4**	1460	49	14.83	89.0	89.0	88.5	0.82	6.9	2.9	2.8	319	57
9.2	**ME 4LB**	**4**	1460	60	18.09	89.5	89.5	88.5	0.82	6.9	2.9	3	360	65
11	**ME 5SA**	**4**	1465	72	21.54	91.0	91.3	90.5	0.81	6.5	2.8	2.6	650	85
15	**ME 5LA**	**4**	1465	98	28.73	90.8	91.0	90.5	0.83	6.5	2.6	2.3	790	101

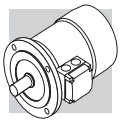

6 P	1000 min^{-1} - S1	50 Hz - IE2

P_n kW			n min^{-1}	M_n Nm	In 400V A	η% 100%	η% 75%	η% 50%	cos φ	I_s/I_n	M_s/M_n	M_a/M_n	J_m x 10^{-4} kgm^2	IM B9 Kg
0.75	**ME 3SA**	**6**	940	7.6	1.98	75.9	75.0	70.7	0.72	4.7	2.2	2.0	33	17
1.1	**ME 3LA**	**6** (*)	945	11.1	2.75	78.1	76.2	73.0	0.74	4.9	2.2	1.9	82	21
1.5	**ME 3LB**	**6**	945	15.2	3.8	79.8	77.5	74.0	0.72	5.6	2.5	2.3	95	23
2.2	**ME 4SA**	**6**	955	22	4.9	81.8	81.8	80.0	0.80	5.7	1.9	1.7	216	34
3	**ME 4SB**	**6**	955	30	6.6	83.3	83.3	82.4	0.79	6.1	2.1	1.9	295	43
4	**ME 4LA**	**6**	965	40	8.6	84.6	85	83.1	0.79	6.9	2.2	2	383	54
5.5	**ME 5SA**	**6** (*)	965	54	11.6	87.0	87.0	86.4	0.79	6.6	2.5	2.3	740	69
7.5	**ME 5SB**	**6** (*)	965	74	15.0	88.0	88.0	87.2	0.82	6.6	2.3	2.1	970	89

(*) Das Verhältnis Leistung / Größe ist nicht genormt

M16 MOTORENABMESSUNGEN BE-ME

BE - IM B5

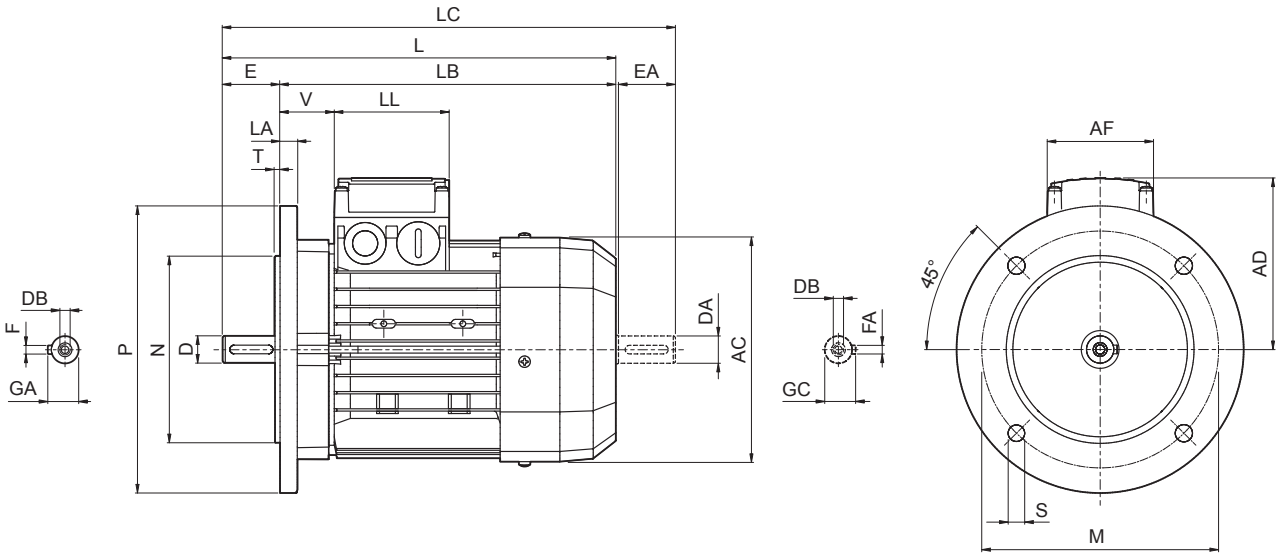

	Welle					Flansch						Motor							
	D DA	**E EA**	**DB**	**GA GC**	**F FA**	**M**	**N**	**P**	**S**	**T**	**LA**	**AC**	**L**	**LB**	**LC**	**AD**	**AF**	**LL**	**V**
BE 80	19	40	M6	21.5	6	165	130	200	11.5	3.5	11.5	156	274	234	315	119	74	80	38
BE 90 S	24	50	M8	27	8							176	326	276	378	133	98	98	44
BE 90 L																			
BE 100	28	60	M10	31		215	180	250	14	4	14	195	367	307	429	142			50
BE 112											15	219	385	325	448	157			52
BE 132 S	38	80	M12	41	10	265	230	300			16	258	493	413	576	193	118	118	58
BE 132 MA																			
BE 132 MB													528	448	611				
BE 160 M	42 38(1)	110 80(1)	M16 M12(1)	45 41(1)	12 10(1)	300	250	350	18.5	5	15	310	596	486	680	245	187	187	51
BE 160 L													640	530	724				
BE 180 M	48 42(1)	110 110(1)	M16 M16(1)	51.5 45(1)	14 12(1)						18	348	708	598	823	261			52
BE 180 L																			

HINWEIS:
1) Diese Maße betreffen das zweite Wellenende.

ME

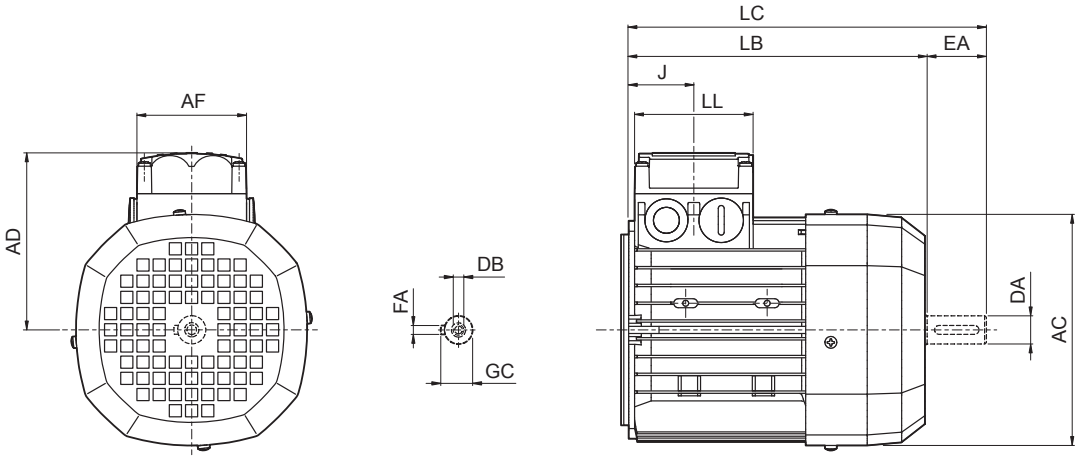

	Zweite Wellenende					Motor						
	DA	**EA**	**DB**	**FA**	**GC**	**AC**	**LB**	**LC**	**AF**	**LL**	**J**	**AD**
ME 2S	19	40	M6	6	21.5	156	202	245	74	80	44	119
ME 3S	28	60	M10	8	31	195	230	293	98	98	53.5	142
ME 3L							262	325				
ME 4S	38	80	M12	10	41	258	361	444	118	118	64.5	193
ME 4L												
ME 4LB							396	479				
ME 5S						310	418	502	187	187	77	245
ME 5L							462	546				

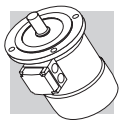

2P — **3000 min^{-1}** - S1 — **50 Hz**

P_n kW			n min^{-1}	M_n Nm	IE1	η (100%) %	η (75%) %	η (50%) %	cosφ	In 400V A	Is/In	Ms/Mn	Ma/Mn	J_m x 10^{-4} kgm^2	IM B5 Kg	G.S.-Bremse FD Mod	Mb Nm	Z_o 1/h NB	Z_o 1/h SB	J_m x 10^{-4} kgm^2	IM B5 Kg	W.S.-Bremse FA Mod	Mb Nm	Z_o 1/h	J_m x 10^{-4} kgm^2	IM B5 Kg
0.18	BN 63A	2	2730	0.63	○	59.9	56.9	51.9	0.77	0.56	3.0	2.1	2.0	2.0	3.5	FD 02	1.75	3900	4800	2.6	5.2	FA 02	1.75	4800	2.6	5.0
0.25	BN 63B	2	2740	0.87	○	66.0	64.8	64.8	0.76	0.72	3.3	2.3	2.3	2.3	3.9	FD 02	1.75	3900	4800	3.0	5.6	FA 02	1.75	4800	3.0	5.4
0.37	BN 63C	2	2800	1.26	○	69.1	66.8	66.8	0.78	0.99	3.9	2.6	2.6	3.3	5.1	FD 02	3.5	3600	4500	3.9	6.8	FA 02	3.5	4500	3.9	6.6
0.37	BN 71A	2	2820	1.25	○	73.8	73.0	70.6	0.76	0.95	4.8	2.8	2.6	3.5	5.4	FD 03	3.5	3000	4100	4.6	8.1	FA 03	3.5	4200	4.6	7.8
0.55	BN 71B	2	2820	1.86	○	76.0	75.8	74.8	0.76	1.37	5.0	2.9	2.8	4.1	6.2	FD 03	5	2900	4200	5.3	8.9	FA 03	5	4200	5.3	8.6
0.75	BN 71C	2	2810	2.6	○	76.6	76.2	76.2	0.76	1.86	5.1	3.1	2.8	5.0	7.3	FD 03	5	1900	3300	6.1	10.0	FA 03	5	3600	6.1	9.7
0.75	BN 80A	2	2810	2.6	•	76.2	75.5	68.3	0.81	1.75	4.8	2.6	2.2	7.8	8.6	FD 04	5	1700	3200	9.4	12.5	FA 04	5	3200	9.4	12.4
1.1	BN 80B	2	2800	3.8	•	76.4	76.2	75.0	0.81	2.57	4.8	2.8	2.4	9.0	9.5	FD 04	10	1500	3000	10.6	13.4	FA 04	10	3000	10.6	13.3
1.5	BN 80C	2	2800	5.1	•	79.1	79.5	77.2	0.81	3.4	4.9	2.7	2.4	11.4	11.3	FD 04	15	1300	2600	13.0	15.2	FA 04	15	2600	13.0	15.1
1.5	BN 90SA	2	2870	5.0	•	82.0	81.5	78.1	0.80	3.4	5.9	2.7	2.6	12.5	12.3	FD 14	15	900	2200	14.1	16.5	FA 14	15	2200	14.1	16.4
1.85	BN 90SB	2	2880	6.1	•	82.5	82.0	75.4	0.80	4.0	6.2	2.9	2.6	16.7	14	FD 14	15	900	2200	18.3	18.2	FA 14	15	2200	18.3	18.1
2.2	BN 90L	2	2880	7.3	•	82.7	82.1	80.8	0.80	4.8	6.3	2.9	2.7	16.7	14	FD 05	26	900	2200	21	20	FA 05	26	2200	21	20.7
3	BN 100L	2	2860	10.0	•	81.5	81.3	77.4	0.79	6.7	5.6	2.6	2.2	31	20	FD 15	26	700	1600	35	26	FA 15	26	1600	35	27
4	BN 100LB	2	2870	13.3	•	83.1	83.0	77.8	0.80	8.7	5.8	2.7	2.5	39	23	FD 15	40	450	900	43	29	FA 15	40	1000	43	30
4	BN 112M	2	2900	13.2	•	85.5	84.5	83.0	0.82	8.2	6.9	3.0	2.9	57	28	FD 06S	40	—	950	66	39	FA 06S	40	950	66	40
5.5	BN 132SA	2	2890	18.2	•	84.7	84.5	81.2	0.84	11.2	5.9	2.6	2.2	101	35	FD 06	50	—	600	112	48	FA 06	50	600	112	49
7.5	BN 132SB	2	2900	25	•	86.5	86.3	84.4	0.85	14.7	6.4	2.6	2.2	145	42	FD 06	50	—	550	154	55	FA 06	50	550	154	56
9.2	BN 132M	2	2930	30	•	87.0	86.5	83.6	0.86	17.7	6.7	2.8	2.3	178	53	FD 56	75	—	430	189	66	FA 06	75	430	189	67
11	BN 160MR	2	2920	36	•	87.6	87.0	86.0	0.88	20.6	6.9	2.9	2.5	210	65											
15	BN 160MB	2	2930	49	•	89.6	89.4	88.0	0.86	28.1	7.1	2.6	2.3	340	84											
18.5	BN 160L	2	2930	60	•	90.4	90.1	89.0	0.86	34	7.6	2.7	2.3	420	97											
22	BN 180M	2	2930	72	•	89.9	89.7	89.5	0.88	40	7.8	2.6	2.4	490	109											
30	BN 200LA	2	2930	98	•	90.7	90.1	87.6	0.89	54	7.8	2.7	2.9	770	140											

○ = n.a. • = IE1

4P — 1500 min-1 - S1 — 50 Hz

P_n kW			n min-1	M_n Nm	IE1	η (100%) %	η (75%) %	η (50%) %	cosφ	In 400V A	Is/In	Ms/Mn	Ma/Mn	J_m x 10^{-4} kgm²	IM B5 Kg	G.S.-Bremse FD Mod	Mb Nm	Z_o 1/h NB	Z_o 1/h SB	J_m x 10^{-4} kgm²	IM B5 Kg	W.S.-Bremse FA Mod	Mb Nm	Z_o 1/h	J_m x 10^{-4} kgm²	IM B5 Kg
0.06	**BN 56A**	4	1340	0.43	○	46.8	44.2	41.3	0.65	0.28	2.6	2.3	2.0	1.5	3.1											
0.09	**BN 56B**	4	1350	0.64	○	51.7	47.6	42.9	0.60	0.42	2.6	2.5	2.4	1.5	3.1											
0.12	**BN 63A**	4	1350	0.85	○	59.8	56.2	47.0	0.62	0.47	2.6	1.9	1.8	2.0	3.5	**FD 02**	1.75	10000	13000	2.6	5.2	**FA 02**	1.75	13000	2.6	5.0
0.18	**BN 63B**	4	1320	1.30	○	54.8	52.9	52.5	0.67	0.71	2.6	2.2	2.0	2.3	3.9	**FD 02**	3.5	10000	13000	3.0	5.6	**FA 02**	3.5	13000	3.0	5.4
0.25	**BN 63C**	4	1340	1.78	○	65.3	65.0	57.9	0.69	0.80	2.7	2.1	1.9	3.3	5.1	**FD 02**	3.5	7800	10000	3.9	6.8	**FA 02**	3.5	10000	3.9	6.6
0.25	**BN 71A**	4	1380	1.73	○	63.7	62.2	59.1	0.73	0.78	3.3	1.9	1.7	5.8	5.1	**FD 03**	3.5	7700	11000	6.9	7.8	**FA 03**	3.5	11000	6.9	7.5
0.37	**BN 71B**	4	1370	2.6	○	66.8	66.7	63.0	0.76	1.05	3.7	2.0	1.9	6.9	5.9	**FD 03**	5	6000	9400	8.0	8.6	**FA 03**	5.0	9400	8.0	8.3
0.55	**BN 71C**	4	1380	3.8	○	69.0	68.9	68.8	0.74	1.55	4.1	2.3	2.3	9.1	7.3	**FD 53**	7.5	4300	8700	10.2	10.0	**FA 03**	7.5	8700	10.2	9.7
0.55	**BN 80A**	4	1390	3.8	○	72.0	71.3	69.7	0.77	1.43	4.1	2.3	2.0	15	8.2	**FD 04**	10	4100	8000	16.6	12.1	**FA 04**	10	8000	16.6	12.0
0.75	**BN 80B**	4	1400	5.1	•	75.0	74.5	69.3	0.78	1.85	4.9	2.7	2.5	20	9.9	**FD 04**	15	4100	7800	22	13.8	**FA 04**	15	7800	22	13.7
1.1	**BN 80C**	4	1400	7.5	•	75.5	76.2	70.4	0.78	2.7	5.1	2.8	2.5	25	11.3	**FD 04**	15	2600	5300	27	15.2	**FA 04**	15	5300	27	15.1
1.1	**BN 90S**	4	1390	7.6	•	76.5	76.2	72.2	0.77	2.70	4.6	2.6	2.2	21	12.2	**FD 14**	15	4800	8000	23	16.4	**FA 14**	15	8000	23	16.3
1.5	**BN 90LA**	4	1410	10.2	•	78.7	78.5	74.9	0.77	3.6	5.3	2.8	2.4	28	13.6	**FD 05**	26	3400	6000	32	19.6	**FA 05**	26	6000	32	20.3
1.85	**BN 90LB**	4	1390	12.7	•	78.6	78.9	77.2	0.79	4.3	5.1	2.8	2.6	30	15.1	**FD 05**	26	3200	5900	34	21.1	**FA 05**	26	5900	34	21.8
2.2	**BN 100LA**	4	1410	14.9	•	81.1	81.4	79.9	0.75	5.2	4.5	2.2	2.0	40	18	**FD 15**	40	2600	4700	44	25	**FA 15**	40	4700	44	25
3	**BN 100LB**	4	1410	20	•	82.6	83.8	83.7	0.77	6.8	5.0	2.3	2.2	54	22	**FD 15**	40	2400	4400	58	28	**FA 15**	40	4400	58	29
4	**BN 112M**	4	1430	27	•	84.4	84.2	81.6	0.81	8.4	5.6	2.7	2.5	98	30	**FD 06S**	60	—	1400	107	40	**FA 06S**	60	2100	107	42
5.5	**BN 132S**	4	1440	36	•	84.7	84.8	82.5	0.81	11.6	5.5	2.3	2.2	213	44	**FD 56**	75	—	1050	223	57	**FA 06**	75	1200	223	58
7.5	**BN 132MA**	4	1440	50	•	86.0	86.3	85.3	0.81	15.5	5.7	2.5	2.4	270	53	**FD 06**	100	—	950	280	66	**FA 07**	100	1000	280	71
9.2	**BN 132MB**	4	1440	61	•	88.4	88.6	87.5	0.81	18.8	5.9	2.7	2.5	319	59	**FD 07**	150	—	900	342	75	**FA 07**	150	900	342	77
11	**BN 160MR**	4	1440	73	•	87.6	87.8	86.0	0.81	22.4	6.0	2.7	2.5	360	70	**FD 07**	150	—	850	382	86	**FA 07**	150	850	382	88
15	**BN 160L**	4	1460	98	•	88.7	88.5	88.4	0.81	30	6.0	2.3	2.1	650	99	**FD 08**	200	—	750	725	129	**FA 08**	200	750	710	128
18.5	**BN 180M**	4	1460	121	•	89.3	89.5	89.2	0.81	37	6.2	2.6	2.5	790	115	**FD 08**	250	—	700	865	145	**FA 08**	250	700	850	144
22	**BN 180L**	4	1460	144	•	89.9	90.0	90.0	0.80	44	6.4	2.5	2.5	1250	135	**FD 09**	300	—	400	1450	175					
30	**BN 200L**	4	1460	196	•	91.4	91.7	91.0	0.80	59	7.1	2.7	2.8	1650	157	**FD 09**	400	—	300	1850	197					

○ = n.a. • = IE1

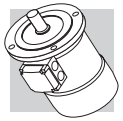

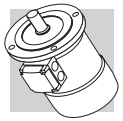

6P — 1000 min-1 - S1 — 50 Hz

P_n kW			n min-1	M_n Nm	IE1	η (100%) %	η (75%) %	η (50%) %	cosφ	In 400V A	Is/In	Ms/Mn	Ma/Mn	J_m x 10^{-4} kgm²	IM B5 Kg	G.S.-Bremse FD Mod	Mb Nm	Z_o 1/h NB	Z_o 1/h SB	J_m x 10^{-4} kgm²	IM B5 Kg	W.S.-Bremse FA Mod	Mb Nm	Z_o 1/h	J_m x 10^{-4} kgm²	IM B5 Kg
0.09	**BN 63A**	**6**	880	0.98	○	41.0	41.0	32.9	0.53	0.60	2.1	2.1	1.8	3.4	4.6	**FD 02**	3.5	9000	14000	4.0	6.3	**FA 02**	3.5	14000	4.0	6.1
0.12	**BN 63B**	**6**	870	1.32	○	45.0	44.0	41.8	0.60	0.64	2.1	1.9	1.7	3.7	4.9	**FD 02**	3.5	9000	14000	4.3	6.6	**FA 02**	3.5	14000	4.3	6.4
0.18	**BN 71A**	**6**	900	1.91	○	55.0	55.5	51.0	0.69	0.68	2.6	1.9	1.7	8.4	5.5	**FD 03**	5	8100	13500	9.5	8.2	**FA 03**	5.0	13500	9.5	7.9
0.25	**BN 71B**	**6**	900	2.70	○	62.0	58.5	51.4	0.71	0.82	2.6	1.9	1.7	10.9	6.7	**FD 03**	5	7800	13000	12	9.4	**FA 03**	5.0	13000	12	9.1
0.37	**BN 71C**	**6**	910	3.9	○	66.0	60.0	53.3	0.69	1.17	3.0	2.4	2.0	12.9	7.7	**FD 53**	7.5	5100	9500	14	10.4	**FA 03**	7.5	9500	14	10.1
0.37	**BN 80A**	**6**	910	3.9	○	68.0	67.4	63.3	0.68	1.15	3.2	2.2	2.0	21	9.9	**FD 04**	10	5200	8500	23	13.8	**FA 04**	10	8500	23	13.7
0.55	**BN 80B**	**6**	920	5.7	○	70.0	69.8	64.3	0.68	1.67	3.9	2.6	2.2	25	11.3	**FD 04**	15	4800	7200	27	15.2	**FA 04**	15	7200	27	15.1
0.75	**BN 80C**	**6**	920	7.8	•	70.0	70.0	64.4	0.65	2.38	3.8	2.5	2.2	28	12.2	**FD 04**	15	3400	6400	30	16.1	**FA 04**	15	6400	30	16.0
0.75	**BN 90S**	**6**	920	7.8	•	70.0	69.0	64.2	0.68	2.27	3.8	2.4	2.2	26	12.6	**FD 14**	15	3400	6500	28	16.8	**FA 14**	15	6500	28	16.7
1.1	**BN 90L**	**6**	920	11.4	•	72.9	72.6	69.1	0.69	3.2	3.9	2.3	2.0	33	15	**FD 05**	26	2700	5000	37	21	**FA 05**	26	5000	37	22
1.5	**BN 100LA**	**6**	940	15.2	•	75.2	74.2	70.3	0.72	4.0	4.1	2.1	2.0	82	22	**FD 15**	40	1900	4100	86	28	**FA 15**	40	4100	86	29
1.85	**BN 100LB**	**6**	930	19.0	•	76.6	72.8	62.6	0.73	4.8	4.6	2.1	2.0	95	24	**FD 15**	40	1700	3600	99	30	**FA 15**	40	3600	99	31
2.2	**BN 112M**	**6**	940	22	•	78.5	79.0	76.5	0.73	5.5	4.8	2.2	2.0	168	32	**FD 06S**	60	—	2100	177	42	**FA 06S**	60	2100	177	44
3	**BN 132S**	**6**	940	30	•	79.7	77.0	75.1	0.76	7.1	5.1	1.9	1.8	216	36	**FD 56**	75	—	1400	226	49	**FA 06**	75	1400	226	50
4	**BN 132MA**	**6**	950	40	•	81.4	81.5	79.5	0.77	9.2	5.5	2.0	1.8	295	45	**FD 06**	100	—	1200	305	58	**FA 07**	100	1200	318	63
5.5	**BN 132MB**	**6**	945	56	•	83.1	80.9	79.1	0.78	12.2	6.1	2.1	1.9	383	56	**FD 07**	150	—	1050	406	72	**FA 07**	150	1050	406	74
7.5	**BN 160M**	**6**	955	75	•	85.0	85.0	84.8	0.81	15.7	5.9	2.2	2.0	740	83	**FD 08**	170	—	900	815	112	**FA 08**	170	900	815	113
11	**BN 160L**	**6**	960	109	•	86.4	86.5	85.9	0.81	22.7	6.6	2.5	2.3	970	103	**FD 08**	200	—	800	1045	133	**FA 08**	200	800	1045	133
15	**BN 180L**	**6**	970	148	•	87.7	88.0	87.3	0.82	30	6.2	2.0	2.4	1550	130	**FD 09**	300	—	600	1750	170					
18.5	**BN 200LA**	**6**	960	184	•	88.6	88.0	87.3	0.81	37	5.9	2.0	2.3	1700	145	**FD 09**	400	—	450	1900	185					

○ = n.a. • = IE1

8P — 750 min^{-1} - S1 — 50 Hz

P_n kW			n min^{-1}	M_n Nm	η %	cosφ	In 400V A	Is/In	Ms/Mn	Ma/Mn	J_m x 10^{-4} kgm^2	IM B5 Kg	G.S.-Bremse FD Mod	Mb Nm	Z_o 1/h NB	Z_o 1/h SB	J_m x 10^{-4} kgm^2	IM B5 Kg	W.S.-Bremse FA Mod	Mb Nm	Z_o 1/h	J_m x 10^{-4} kgm^2	IM B5 Kg
0.09	**BN 71A**	**8**	680	1.26	47	0.59	0.47	2.3	2.4	2.3	10.9	6.7	**FD 03**	3.5	9000	16000	12.0	9.4	**FA 03**	3.5	16000	12.0	9.1
0.12	**BN 71B**	**8**	680	1.69	51	0.59	0.58	2.1	2.3	2.2	12.9	7.7	**FD 03**	5.0	9000	16000	14.0	10.4	**FA 03**	5.0	16000	14.0	10.1
0.18	**BN 80A**	**8**	690	2.49	51	0.60	0.85	2.4	2.2	2.2	15	8.2	**FD 04**	5.0	6500	11000	16.6	12.1	**FA 04**	5.0	11000	16.6	12.0
0.25	**BN 80B**	**8**	680	3.51	54	0.63	1.06	2.4	2.0	1.9	20	9.9	**FD 04**	10.0	6000	10000	22	13.8	**FA 04**	10.0	10000	23	13.7
0.37	**BN 90S**	**8**	675	5.2	58	0.60	1.53	2.6	2.3	2.1	26	12.6	**FD 14**	15.0	4800	7500	28	16.8	**FA 14**	15.0	7500	28	16.7
0.55	**BN 90L**	**8**	670	7.8	62	0.60	2.13	2.6	2.2	2.0	33	15	**FD 05**	26	4000	6400	37	21	**FA 05**	26	6400	37	22
0.75	**BN 100LA**	**8**	700	10.2	68	0.63	2.53	3.4	1.9	1.7	82	22	**FD 15**	26	2800	4800	86	28	**FA 15**	26	4800	86	29
1.1	**BN 100LB**	**8**	700	15.0	68	0.64	3.65	3.2	1.7	1.7	95	24	**FD 15**	40	2500	4000	99	30	**FA 15**	40	4000	99	31
1.5	**BN 112M**	**8**	710	20.2	71	0.66	4.6	3.7	1.8	1.9	168	32	**FD 06S**	60	—	3000	177	42	**FA 06S**	60	3000	177	44
2.2	**BN 132S**	**8**	710	29.6	75	0.66	6.4	3.8	1.8	2.0	295	45	**FD 56**	75	—	2300	305	58	**FA 06**	75	2300	305	56
3	**BN 132MA**	**8**	710	40.4	76	0.69	8.3	3.9	1.6	1.8	370	53	**FD 06**	100	—	1900	394	69	**FA 07**	100	1900	406	74

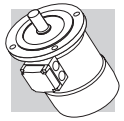

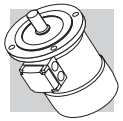

2/4P — 3000/1500 min^{-1} - S1 — 50 Hz

P_n kW			n min^{-1}	M_n Nm	η %	cosφ	In 400V A	Is/In	Ms/Mn	Ma/Mn	J_m x 10^{-4} kgm^2	IM B5 Kg	G.S.-Bremse FD Mod	Mb Nm	Z_o 1/h NB	Z_o 1/h SB	J_m x 10^{-4} kgm^2	IM B5 Kg	W.S.-Bremse FA Mod	Mb Nm	Z_o 1/h	J_m x 10^{-4} kgm^2	IM B5 Kg
0.20	**BN 63B**	**2**	2700	0.71	55	0.82	0.64	3.5	2.1	1.9	2.9	4.4	**FD 02**	3.5	2200	2600	3.5	6.1	**FA 02**	3.5	2600	3.5	5.9
0.15		**4**	1350	1.06	49	0.67	0.66	2.6	1.8	1.7					4000	5100					5100		
0.28	**BN 71A**	**2**	2700	0.99	56	0.82	0.88	2.9	1.9	1.7	4.7	4.4	**FD 03**	3.5	2100	2400	5.8	7.1	**FA 03**	3.5	2400	5.8	6.8
0.20		**4**	1370	1.39	59	0.72	0.68	3.1	1.8	1.7					3800	4800					4800		
0.37	**BN 71B**	**2**	2740	1.29	56	0.82	1.16	3.5	1.8	1.8	5.8	5.1	**FD 03**	5.0	1400	2100	6.9	7.8	**FA 03**	5.0	2100	6.9	7.5
0.25		**4**	1390	1.72	60	0.73	0.82	3.3	2.0	1.9					2900	4200					4200		
0.45	**BN 71C**	**2**	2780	1.55	63	0.85	1.21	3.8	1.8	1.8	6.9	5.9	**FD 03**	5.0	1400	2100	8.0	8.6	**FA 03**	5.0	2100	8.0	8.3
0.30		**4**	1400	2.0	63	0.73	0.94	3.6	2.0	1.9					2900	4200					4200		
0.55	**BN 80A**	**2**	2800	1.9	63	0.85	1.48	3.9	1.7	1.7	15	8.2	**FD 04**	5.0	1600	2300	17	12.1	**FA 04**	5.0	2300	16.6	12.0
0.37		**4**	1400	2.5	67	0.79	1.01	4.1	1.8	1.9					3000	4000					4000		
0.75	**BN 80B**	**2**	2780	2.6	65	0.85	1.96	3.8	1.9	1.8	20	9.9	**FD 04**	10	1400	1600	22	13.8	**FA 04**	10	1600	22	13.7
0.55		**4**	1400	3.8	68	0.81	1.44	3.9	1.7	1.7					2700	3600					3600		
1.1	**BN 90S**	**2**	2790	3.8	71	0.82	2.73	4.7	2.3	2.0	21	12.2	**FD 14**	10	1500	1600	23	16.4	**FA 14**	10	1600	23	16.3
0.75		**4**	1390	5.2	66	0.79	2.08	4.6	2.4	2.2					2300	2800					2800		
1.5	**BN 90L**	**2**	2780	5.2	70	0.85	3.64	4.5	2.4	2.1	28	14.0	**FD 05**	26	1050	1200	32	20	**FA 05**	26	1200	32	21
1.1		**4**	1390	7.6	73	0.81	2.69	4.7	2.5	2.2					1600	2000					2000		
2.2	**BN 100LA**	**2**	2800	7.5	72	0.85	5.2	4.5	2.0	1.9	40	18.3	**FD 15**	26	600	900	44	25	**FA 15**	26	900	44	25
1.5		**4**	1410	10.2	73	0.79	3.8	4.7	2.0	2.0					1300	2300					2300		
3.5	**BN 100LB**	**2**	2850	11.7	80	0.84	7.5	5.4	2.2	2.1	61	25	**FD 15**	40	500	900	65	31	**FA 15**	40	900	65	32
2.5		**4**	1420	16.8	82	0.80	5.5	5.2	2.2	2.2					1000	2100					2100		
4	**BN 112M**	**2**	2880	13.3	79	0.83	8.8	6.1	2.4	2.0	98	30	**FD 06S**	60	—	700	107	40	**FA 06S**	60	700	107	42
3.3		**4**	1420	22.2	80	0.80	7.4	5.1	2.1	2.0					—	1200					1200		
5.5	**BN 132S**	**2**	2890	18.2	80	0.87	11.4	5.9	2.4	2.0	213	44	**FD 56**	75	—	350	223	57	**FA 06**	75	350	223	58
4.4		**4**	1440	29	82	0.84	9.2	5.3	2.2	2.0					—	900					900		
7.5	**BN 132MA**	**2**	2900	25	82	0.87	15.2	6.5	2.4	2.0	270	53	**FD 06**	100	—	350	280	66	**FA 07**	100	350	293	71
6		**4**	1430	40	84	0.85	12.1	5.8	2.3	2.1					—	900					900		
9.2	**BN 132MB**	**2**	2920	30	83	0.86	18.6	6.0	2.6	2.2	319	59	**FD 07**	150	—	300	342	75	**FA 07**	150	300	342	77
7.3		**4**	1440	48	85	0.85	14.6	5.5	2.3	2.1					—	800					800		

2/6P — 3000/1000 min^{-1} - S3 60/40% — 50 Hz

P_n kW			n min^{-1}	M_n Nm	η %	cosφ	In 400V A	Is/In	Ms/Mn	Ma/Mn	J_m x 10^{-4} kgm^2	IM B5 Kg	G.S.-Bremse FD Mod	Mb Nm	Z_o 1/h NB	Z_o 1/h SB	J_m x 10^{-4} kgm^2	IM B5 Kg	W.S.-Bremse FA Mod	Mb Nm	Z_o 1/h	J_m x 10^{-4} kgm^2	IM B5 Kg
0.25	BN 71A	2	2850	0.84	60	0.82	0.73	4.3	1.9	1.8	6.9	5.9	FD 03	1.75	1500	1700	8.0	8.6	FA 03	2.5	1700	8.0	8.3
0.08		6	910	0.84	43	0.70	0.38	2.1	1.4	1.5					10000	13000					13000		
0.37	BN 71B	2	2880	1.23	62	0.80	1.08	4.4	1.9	1.8	9.1	7.3	FD 03	3.5	1000	1300	10.2	10.0	FA 03	3.5	1300	10.2	9.7
0.12		6	900	1.27	44	0.73	0.54	2.4	1.4	1.5					9000	11000					11000		
0.55	BN 80A	2	2800	1.88	63	0.86	1.47	4.5	1.9	1.7	20	9.9	FD 04	5.0	1500	1800	22	13.8	FA 04	5.0	1800	22	13.7
0.18		6	930	1.85	52	0.65	0.77	3.3	2.0	1.9					4100	6300					6300		
0.75	BN 80B	2	2800	2.6	66	0.87	1.89	4.3	1.8	1.6	25	11.3	FD 04	5.0	1700	1900	27	15.2	FA 04	5.0	1900	27	15.1
0.25		6	930	2.6	54	0.67	1.00	3.2	1.7	1.8					3800	6000					6000		
1.10	BN 90L	2	2860	3.7	67	0.84	2.82	4.7	2.1	1.9	28	14.0	FD 05	13	1400	1600	32	20	FA 05	13	1600	32	21
0.37		6	920	3.8	59	0.71	1.27	3.3	1.6	1.6					3400	5200					5200		
1.5	BN 100LA	2	2880	5	73	0.84	3.53	5.1	1.9	2.0	40	18.3	FD 15	13	1000	1200	44	24	FA 15	13	1200	44	25
0.55		6	940	5.6	64	0.67	1.85	3.5	1.7	1.8					2900	4000					4000		
2.2	BN 100LB	2	2900	7.2	77	0.85	4.9	5.9	2.0	2.0	61	25	FD 15	26	700	900	65	31	FA 15	26	900	65	32
0.75		6	950	7.5	67	0.64	2.5	3.3	1.9	1.8					2100	3000					3000		
3	BN 112M	2	2900	9.9	78	0.87	6.4	6.3	2.0	2.1	98	30	FD 06S	40	—	1000	107	40	FA 06S	40	1000	107	32
1.1		6	950	11.1	72	0.64	3.4	3.9	1.8	1.8					—	2600					2600		
4.5	BN 132S	2	2910	14.8	78	0.84	9.9	5.8	1.9	1.8	213	44	FD 56	37	—	500	223	57	FA 06	37	500	223	58
1.5		6	960	14.9	74	0.67	4.4	4.2	1.9	2.0					—	2100					2100		
5.5	BN 132M	2	2920	18.0	78	0.87	11.7	6.2	2.1	1.9	270	53	FD 56	50	—	400	280	66	FA 06	50	400	280	67
2.2		6	960	22	77	0.71	5.8	4.3	2.1	2.0					—	1900					1900		

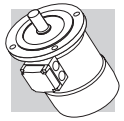

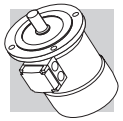

2/8P — 3000/750 min-1 - S3 60/40% — 50 Hz

P_n kW			n min-1	M_n Nm	η %	cosφ	In 400V A	Is/In	Ms/Mn	Ma/Mn	J_m x 10^{-4} kgm²	IM B5 Kg	G.S.-Bremse FD Mod	Mb Nm	Z_o 1/h NB	Z_o 1/h SB	J_m x 10^{-4} kgm²	IM B5 Kg	W.S.-Bremse FA Mod	Mb Nm	Z_o 1/h	J_m x 10^{-4} kgm²	IM B5 Kg
0.25	BN 71A	2	2790	0.86	61	0.87	0.68	3.9	1.8	1.9	10.9	6.7	FD 03	1.75	1300	1400	12	9.4	FA 03	2.5	1400	12	9.1
0.06		8	680	0.84	31	0.61	0.46	2.0	1.8	1.9					10000	13000					13000		
0.37	BN 71B	2	2800	1.26	63	0.86	0.99	3.9	1.8	1.9	12.9	7.7	FD 03	3.5	1200	1300	14	10.4	FA 03	3.5	1300	14	10.1
0.09		8	670	1.28	34	0.75	0.51	1.8	1.4	1.5					9500	13000					13000		
0.55	BN 80A	2	2830	1.86	66	0.86	1.40	4.4	2.1	2.0	20	9.9	FD 04	5.0	1500	1800	22	13.8	FA 04	5.0	1800	22	13.7
0.13		8	690	1.80	41	0.64	0.72	2.3	1.6	1.7					5600	8000					8000		
0.75	BN 80B	2	2800	2.6	68	0.88	1.81	4.6	2.1	2.0	25	11.3	FD 04	10	1700	1900	27	15.2	FA 04	10	1900	27	15.1
0.18		8	690	2.5	43	0.66	0.92	2.3	1.6	1.7					4800	7300					7300		
1.10	BN 90L	2	2830	3.7	63	0.84	3.00	4.5	2.1	1.9	28	14.0	FD 05	13	1400	1600	32	20	FA 05	13	1600	32	21
0.28		8	690	3.9	48	0.63	1.34	2.4	1.8	1.9					3400	5100					5100		
1.5	BN 100LA	2	2880	5.0	69	0.85	3.69	4.7	1.9	1.8	40	18.3	FD 15	13	1000	1200	44	25	FA 15	13	1200	44	25
0.37		8	690	5.1	46	0.63	1.84	2.1	1.6	1.6					3300	5000					5000		
2.4	BN 100LB	2	2900	7.9	75	0.82	5.6	5.4	2.1	2.0	61	25	FD 15	26	550	700	65	31	FA 15	26	700	65	32
0.55		8	700	7.5	54	0.58	2.5	2.6	1.8	1.8					2000	3500					3500		
3	BN 112M	2	2900	9.9	76	0.87	6.5	6.3	2.1	1.9	98	30	FD 06S	40	—	900	107	40	FA 06S	40	900	107	42
0.75		8	690	10.4	60	0.65	2.8	2.5	1.6	1.6					—	2900					2900		
4	BN 132S	2	2870	13.3	73	0.84	9.4	5.6	2.3	2.4	213	44	FD 56	37	—	500	223	57	FA 06	37	500	223	58
1		8	690	13.8	66	0.62	3.5	2.9	1.9	1.8					—	3500					3500		
5.5	BN 132M	2	2870	18.3	75	0.84	12.6	6.1	2.4	2.5	270	53	FD 06	50	—	400	280	66	FA 06	50	400	280	67
1.5		8	690	21	68	0.63	5.1	2.9	1.9	1.9					—	2400					2400		

2/12P — 3000/500 min-1 - S3 60/40% — 50 Hz

													G.S.-Bremse						W.S.-Bremse				
													FD						FA				
P_n kW			n min-1	M_n Nm	η %	cosφ	In 400V A	Is/In	Ms/Mn	Ma/Mn	J_m x 10^{-4} kgm²	IM B5 Kg	Mod	Mb Nm	Z_o 1/h NB	Z_o 1/h SB	J_m x 10^{-4} kgm²	IM B5 Kg	Mod	Mb Nm	Z_o 1/h	J_m x 10^{-4} kgm²	IM B5 Kg
0.55	**BN 80B**	**2**	2820	1.86	64	0.89	1.39	4.2	1.6	1.7	25	11.3	**FD 04**	5.0	1000	1300	27	15.2	**FA 04**	5.0	1300	27	15.1
0.09		**12**	430	2.0	30	0.63	0.69	1.8	1.9	1.8					8000	12000					12000		
0.75	**BN 90L**	**2**	2790	2.6	56	0.89	2.17	4.2	1.8	1.7	26	12.6	**FD 05**	13	1000	1150	30	18.6	**FA 05**	13	1150	30	19.3
0.12		**12**	430	2.7	26	0.63	1.06	1.7	1.4	1.6					4600	6300					6300		
1.10	**BN 100LA**	**2**	2850	3.7	65	0.85	2.87	4.5	1.6	1.8	40	18.3	**FD 15**	13	700	900	44	25	**FA 15**	13	900	44	25
0.18		**12**	430	4.0	26	0.54	1.85	1.5	1.3	1.5					4000	6000					6000		
1.5	**BN 100LB**	**2**	2900	4.9	67	0.86	3.76	5.6	1.9	1.9	54	22	**FD 15**	13	700	900	58	28	**FA 15**	13	900	58	29
0.25		**12**	440	5.4	36	0.46	2.18	1.8	1.7	1.8					3800	5000					5000		
2	**BN 112M**	**2**	2900	6.6	74	0.88	4.43	6.5	2.1	2.0	98	30	**FD 06S**	20	—	800	107	40	**FA 06S**	20	800	107	42
0.3		**12**	460	6.2	46	0.43	2.19	2.0	2.1	2.0					—	3400					3400		
3	**BN 132S**	**2**	2920	9.8	74	0.87	6.7	6.8	2.3	1.9	213	44	**FD 56**	37	—	450	223	57	**FA 06**	37	450	223	58
0.5		**12**	470	10.2	51	0.43	3.3	2.0	1.7	1.6					—	3000					3000		
4	**BN 132M**	**2**	2920	13.1	75	0.89	8.6	5.9	2.4	2.3	270	53	**FD 56**	37	—	400	280	66	**FA 06**	37	400	280	67
0.7		**12**	460	14.5	53	0.44	4.3	1.9	1.7	1.6					—	2800					2800		

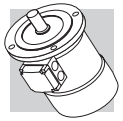

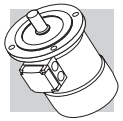

4/6P — 1500/1000 min^{-1} - S1 — 50 Hz

													G.S.-Bremse						W.S.-Bremse				
													FD						FA				
P_n kW			n min^{-1}	M_n Nm	η %	cosφ	In 400V A	Is/In	Ms/Mn	Ma/Mn	J_m x 10^{-4} kgm^2	IM B5 Kg	Mod	Mb Nm	Z_o 1/h NB	Z_o 1/h SB	J_m x 10^{-4} kgm^2	IM B5 Kg	Mod	Mb Nm	Z_o 1/h	J_m x 10^{-4} kgm^2	IM B5 Kg
0.22	**BN 71B**	**4**	1410	1.5	64	0.74	0.67	3.9	1.8	1.9	9.1	7.3	**FD 03**	3.5	2500	3500	10.2	10.0	**FA 03**	3.5	3500	10.2	9.7
0.13		**6**	920	1.4	43	0.67	0.65	2.3	1.6	1.7					5000	9000					9000		
0.30	**BN 80A**	**4**	1410	2.0	61	0.82	0.87	3.5	1.3	1.5	15	8.2	**FD 04**	5.0	2500	3100	16.6	12.1	**FA 04**	5.0	3100	16.6	12.0
0.20		**6**	930	2.1	54	0.66	0.81	3.2	1.9	2.0					4000	6000					6000		
0.40	**BN 80B**	**4**	1430	2.7	63	0.75	1.22	3.9	1.8	1.8	20	9.9	**FD 04**	10	1800	2300	22	13.8	**FA 04**	10	2300	22	13.7
0.26		**6**	930	2.7	55	0.70	0.97	2.7	1.5	1.6					3600	5500					5500		
0.55	**BN 90S**	**4**	1420	3.7	70	0.78	1.45	4.5	2.0	1.9	21	12.2	**FD 14**	10	1500	2100	23	16.1	**FA 14**	10	2100	23	16.3
0.33		**6**	930	3.4	62	0.70	1.10	3.7	2.3	2.0					2500	4100					4100		
0.75	**BN 90L**	**4**	1420	5.0	74	0.78	1.88	4.3	1.9	1.8	28	14	**FD 05**	13	1400	2000	32	20	**FA 05**	13	2000	32	21
0.45		**6**	920	4.7	66	0.71	1.39	3.3	2.0	1.9					2300	3600					3600		
1.1	**BN 100LA**	**4**	1450	7.2	74	0.79	2.72	5.0	1.7	1.9	82	22	**FD 15**	26	1400	2000	86	28	**FA 15**	26	2000	86	29
0.8		**6**	950	8.0	65	0.69	2.57	4.1	1.9	2.1					2100	3300					3300		
1.5	**BN 100LB**	**4**	1450	9.9	75	0.79	3.65	5.1	1.7	1.9	95	25	**FD 15**	26	1300	1800	99	31	**FA 15**	26	1800	99	32
1.1		**6**	950	11.1	72	0.68	3.24	4.3	2.0	2.1					2000	3000					3000		
2.3	**BN 112M**	**4**	1450	15.2	75	0.78	5.7	5.2	1.8	1.9	168	32	**FD 06S**	40	—	1600	177	42	**FA 06S**	40	1600	177	44
1.5		**6**	960	14.9	73	0.72	4.1	4.9	2.0	2.0					—	2400					2400		
3.1	**BN 132S**	**4**	1460	20	83	0.83	6.5	5.9	2.1	2.0	213	44	**FD 56**	37	—	1200	223	57	**FA 06**	37	1200	223	58
2		**6**	960	20	77	0.75	4.9	4.5	2.1	2.1					—	1900					1900		
4.2	**BN 132MA**	**4**	1460	27	84	0.82	8.8	5.9	2.1	2.2	270	53	**FD 06**	50	—	900	280	66	**FA 06**	50	900	280	67
2.6		**6**	960	26	79	0.72	6.6	4.3	2.0	2.0					—	1500					1500		

4/8P — 1500/750 min^{-1} - S1 — 50 Hz

P_n kW			n min^{-1}	M_n Nm	η %	cosφ	In 400V A	Is/In	Ms/Mn	Ma/Mn	J_m x 10^{-4} kgm^2	IM B5 Kg	G.S.-Bremse FD Mod	Mb Nm	Z_o 1/h NB	Z_o 1/h SB	J_m x 10^{-4} kgm^2	IM B5 Kg	W.S.-Bremse FA Mod	Mb Nm	Z_o 1/h	J_m x 10^{-4} kgm^2	IM B5 Kg
0.37	**BN 80A**	**4**	1400	2.5	63	0.82	1.03	3.3	1.4	1.4	15	8.2	**FD 04**	10	2300	3500	16.6	12.1	**FA 04**	10	3500	16.6	12.0
0.18		**8**	690	2.5	44	0.60	0.98	2.2	1.5	1.6					4500	7000					7000		
0.55	**BN 80B**	**4**	1390	3.8	65	0.86	1.42	3.8	1.7	1.6	20	9.9	**FD 04**	10	2200	2900	22	13.8	**FA 04**	10	2900	22	13.7
0.30		**8**	670	4.3	49	0.65	1.36	2.3	1.7	1.8					4200	6500					6500		
0.65	**BN 90S**	**4**	1390	4.5	73	0.85	1.51	4.0	1.9	1.9	28	13.6	**FD 14**	15	2300	2800	30	17.8	**FA 14**	15	2800	30	17.7
0.35		**8**	690	4.8	49	0.57	1.81	2.5	2.1	2.2					3500	6000					6000		
0.9	**BN 90L**	**4**	1370	6.3	73	0.87	2.05	3.8	1.8	1.8	30	15.1	**FD 05**	26	1700	2100	34	21	**FA 05**	26	2100	34	22
0.5		**8**	670	7.1	57	0.62	2.04	2.4	2.1	2.0					2500	4200					4200		
1.30	**BN 100LA**	**4**	1420	8.7	72	0.83	3.14	4.3	1.7	1.8	82	22	**FD 15**	40	1300	1700	86	28	**FA 15**	40	1700	86	29
0.70		**8**	700	9.6	58	0.64	2.72	2.8	1.8	1.8					2000	3400					3400		
1.8	**BN 100LB**	**4**	1420	12.1	69	0.87	4.3	4.2	1.6	1.7	95	25	**FD 15**	40	1200	1700	99	31	**FA 15**	40	1700	99	32
0.9		**8**	700	12.3	62	0.63	3.3	3.2	1.7	1.8					1600	2600					2600		
2.2	**BN 112M**	**4**	1440	14.6	77	0.85	4.9	5.3	1.8	1.8	168	32	**FD 06S**	60	—	1200	177	42	**FA 06S**	60	1200	177	43
1.2		**8**	710	16.1	70	0.63	3.9	3.3	1.9	1.8					—	2000					2000		
3.6	**BN 132S**	**4**	1440	24	80	0.82	7.9	6.5	2.1	1.9	295	45	**FD 56**	75	—	1000	305	58	**FA 06**	75	1000	305	59
1.8		**8**	720	24	72	0.55	6.6	4.6	1.9	2.0					—	1400					1400		
4.6	**BN 132M**	**4**	1450	30	81	0.83	9.9	6.5	2.2	1.9	383	56	**FD 06**	100	—	1000	393	69	**FA 07**	100	1000	406	74
2.3		**8**	720	31	73	0.54	8.4	4.4	2.3	2.0					—	1300					1300		

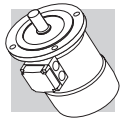

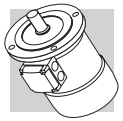

2P — 3000 min-1 - S1 — 50 Hz

P_n kW			n min-1	M_n Nm	IE1	η (100%) %	η (75%) %	η (50%) %	cosφ	In 400V A	Is/In	Ms/Mn	Ma/Mn	J_m x 10^{-4} kgm²	IM B5 Kg	G.S.-Bremse FD Mod	Mb Nm	Z_o 1/h NB	Z_o 1/h SB	J_m x 10^{-4} kgm²	IM B5 Kg	W.S.-Bremse FA Mod	Mb Nm	Z_o 1/h	J_m x 10^{-4} kgm²	IM B5 Kg
0.18	**M 05A**	**2**	2730	0.63	○	59.9	56.9	51.9	0.77	0.56	3.0	2.1	2.0	2.0	3.2	**FD 02**	1.75	3900	4800	2.6	4.9	**FA 02**	1.75	4800	2.6	4.7
0.25	**M 05B**	**2**	2740	0.87	○	66.0	64.8	64.8	0.76	0.72	3.3	2.3	2.3	2.3	3.6	**FD 02**	1.75	3900	4800	3.0	5.3	**FA 02**	1.75	4800	3.0	5.1
0.37	**M 05C**	**2**	2800	1.26	○	69.1	66.8	66.8	0.78	0.99	3.9	2.6	2.6	3.3	4.8	**FD 02**	3.5	3600	4500	3.9	6.5	**FA 02**	3.5	4500	3.9	6.3
0.55	**M 1SD**	**2**	2820	1.86	○	76.0	75.8	74.8	0.76	1.37	5.0	2.9	2.8	4.1	5.8	**FD 03**	5	2900	4200	5.3	8.5	**FA 03**	5	4200	5.3	8.2
0.75	**M 1LA**	**2**	2810	2.6	○	76.6	76.2	76.2	0.76	1.86	5.1	3.1	2.8	5.0	6.9	**FD 03**	5	1900	3300	6.1	9.6	**FA 03**	5	3300	6.1	9.3
1.1	**M 2SA**	**2**	2800	3.8	•	76.4	76.2	75.0	0.81	2.57	4.8	2.8	2.4	9.0	8.8	**FD 04**	10	1500	3000	10.6	11.9	**FA 04**	10	3000	10.6	12.6
1.5	**M 2SB**	**2**	2800	5.1	•	79.1	79.5	77.2	0.81	3.4	4.9	2.7	2.4	11.4	10.6	**FD 04**	15	1300	2600	13.0	9.9	**FA 04**	15	2600	13.0	14.4
2.2	**M 3SA**	**2**	2880	7.3	•	82.7	82.1	81.0	0.80	4.8	6.3	2.9	2.7	24	15.5	**FD 15**	26	1100	2400	28	22	**FA 15**	26	2400	28	23
3	**M 3LA**	**2**	2860	10.0	•	81.5	81.3	77.4	0.79	6.7	5.6	2.6	2.2	31	18.7	**FD 15**	26	700	1600	35	25	**FA 15**	26	1600	35	26
4	**M 3LB**	**2**	2870	13.3	•	83.1	83.0	77.8	0.80	8.7	5.8	2.7	2.5	39	22	**FD 15**	40	450	900	43	28	**FA 15**	40	900	43	29
5.5	**M 4SA**	**2**	2890	18.2	•	84.7	84.5	81.2	0.84	11.2	5.9	2.6	2.2	101	33	**FD 06**	50	—	600	112	46	**FA 06**	50	600	112	47
7.5	**M 4SB**	**2**	2900	25	•	86.5	86.3	84.4	0.85	14.7	6.4	2.6	2.2	145	40	**FD 06**	50	—	550	154	53	**FA 06**	50	550	154	54
9.2	**M 4LA**	**2**	2930	30	•	87.0	86.5	83.6	0.86	17.7	6.7	2.8	2.3	178	51	**FD 56**	75	—	430	189	64	**FA 06**	75	430	189	65
11	**M 4LC**	**2**	2920	36	•	87.6	87.0	86.0	0.88	20.6	6.9	2.9	2.5	210	60											
15	**M 5SB**	**2**	2930	49	•	89.6	89.4	88.0	0.86	28.1	7.1	2.6	2.3	340	70											
18.5	**M 5SC**	**2**	2930	60	•	90.4	90.1	89.0	0.86	34	7.6	2.7	2.3	420	83											
22	**M 5LA**	**2**	2930	72	•	89.9	89.7	89.5	0.88	40	7.8	2.6	2.4	490	95											

○ = n.a. • = IE1

4P — 1500 min^{-1} - S1 — 50 Hz

															G.S.-Bremse						W.S.-Bremse				
															FD						FA				
P_n kW			n min^{-1}	M_n Nm	IE1	η (100%) %	η (75%) %	η (50%) %	cosφ	In 400V A	Is/In	Ms/Mn	Ma/Mn	J_m x 10^{-4} kgm^2	IM B5 Kg	Mod	Mb Nm	Z_o 1/h NB	Z_o 1/h SB	J_m x 10^{-4} kgm^2	IM B5 Kg	Mod	Mb Nm	Z_o 1/h	J_m x 10^{-4} kgm^2	IM B5 Kg
0.09	**M 0B**	**4**	1350	0.64	○	51.7	47.6	42.9	0.60	0.42	2.6	2.5	2.4	1.5	2.9											
0.12	**M 05A**	**4**	1350	0.85	○	59.8	56.2	47.0	0.62	0.47	2.6	1.9	1.8	2.0	3.2	**FD 02**	1.75	10000	13000	2.6	4.9	**FA 02**	1.75	13000	2.6	4.7
0.18	**M 05B**	**4**	1320	1.30	○	54.8	52.9	52.5	0.67	0.71	2.6	2.2	2.0	2.3	3.6	**FD 02**	3.5	10000	13000	3.0	5.3	**FA 02**	3.5	13000	3.0	5.1
0.25	**M 05C**	**4**	1340	1.78	○	65.3	65.0	57.9	0.69	0.80	2.7	2.1	1.9	3.3	4.8	**FD 02**	3.5	7800	10000	3.9	6.5	**FA 02**	3.5	10000	3.9	6.3
0.37	**M 1SD**	**4**	1370	2.6	○	66.8	66.7	63.0	0.76	1.05	3.7	2.0	1.9	6.9	5.5	**FD 03**	5	6000	9400	8.0	8.2	**FA 03**	5	9400	8.0	7.9
0.55	**M 1LA**	**4**	1380	3.8	○	69.0	68.9	68.8	0.74	1.55	4.1	2.3	2.3	9.1	6.9	**FD 53**	7.5	4300	8700	10.2	9.6	**FA 03**	7.5	8700	10.2	9.3
0.75	**M 2SA**	**4**	1400	5.1	•	75.0	74.5	69.3	0.78	1.85	4.9	2.7	2.5	20	9.2	**FD 04**	15	4100	7800	22	13.1	**FA 04**	15	7800	22	13.0
1.1	**M 2SB**	**4**	1400	7.5	•	76.4	76.2	70.4	0.78	2.66	5.1	2.8	2.5	25	10.6	**FD 04**	15	2600	5300	27	14.5	**FA 04**	15	5300	27	14.4
1.5	**M 3SA**	**4**	1410	10.2	•	79.6	80.5	79.3	0.77	3.5	4.6	2.1	2.1	34	15.5	**FD 15**	26	2800	4900	38	22	**FA 15**	26	4900	38	23
2.2	**M 3LA**	**4**	1410	14.9	•	81.1	81.4	79.9	0.75	5.2	4.5	2.2	2.0	40	17	**FD 15**	40	2600	4700	44	24	**FA 15**	40	4700	44	24
3	**M 3LB**	**4**	1410	20	•	82.6	83.8	83.7	0.77	6.8	5.0	2.3	2.2	54	21	**FD 15**	40	2400	4400	58	27	**FA 15**	40	4400	58	28
4	**M 3LC**	**4**	1400	27	○	82.7	83.1	80.5	0.78	9.0	4.7	2.3	2.2	61	23	**FD 55**	55	—	1300	65	29	**FA 15**	40	1300	65	30
5.5	**M 4SA**	**4**	1440	36	•	84.7	84.8	82.5	0.81	11.6	5.5	2.3	2.2	213	42	**FD 56**	75	—	1050	223	55	**FA 06**	75	1050	223	56
7.5	**M 4LA**	**4**	1440	50	•	86.0	86.3	85.3	0.81	15.5	5.7	2.5	2.4	270	51	**FD 06**	100	—	950	280	64	**FA 07**	100	950	280	65
9.2	**M 4LB**	**4**	1440	61	•	88.4	88.6	87.5	0.81	18.8	5.9	2.7	2.5	319	57	**FD 07**	150	—	900	342	73	**FA 07**	150	900	342	75
11	**M 4LC**	**4**	1440	73	•	87.6	87.8	86.0	0.81	22.4	6.0	2.7	2.5	360	65	**FD 07**	150	—	850	382	81	**FA 07**	150	850	382	83
15	**M 5SB**	**4**	1460	98	•	88.7	88.5	88.4	0.81	30.1	6.0	2.3	2.1	650	85	**FD 08**	200	—	750	725	115	**FA 08**	200	750	710	114
18.5	**M 5LA**	**4**	1460	121	•	89.3	89.5	89.2	0.81	37	6.2	2.6	2.5	790	101	**FD 08**	250	—	700	865	131	**FA 08**	250	700	850	130

○ = n.a. • = IE1

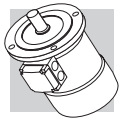

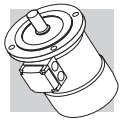

6P — 1000 min-1 - S1 — 50 Hz

															G.S.-Bremse						W.S.-Bremse				
															FD						FA				
P_n kW			n min-1	M_n Nm	IE1	η (100%) %	η (75%) %	η (50%) %	cosφ	In 400V A	Is/In	Ms/Mn	Ma/Mn	J_m x 10^{-4} kgm²	IM B5 Kg	Mod	Mb Nm	Z_o 1/h NB	Z_o 1/h SB	J_m x 10^{-4} kgm²	IM B5 Kg	Mod	Mb Nm	Z_o 1/h	J_m x 10^{-4} kgm²	IM B5 Kg
0.09	**M 05A**	**6**	880	0.98	○	41.0	41.0	32.9	0.53	0.60	2.1	2.1	1.8	3.4	4.3	**FD 02**	3.5	9000	14000	4.0	6.0	**FA 02**	3.5	14000	4.0	5.8
0.12	**M 05B**	**6**	870	1.32	○	45.0	44.0	41.8	0.60	0.64	2.1	1.9	1.7	3.7	4.6	**FD 02**	3.5	9000	14000	4.3	6.3	**FA 02**	3.5	14000	4.3	6.1
0.18	**M 1SC**	**6**	900	1.91	○	55.0	55.5	51.0	0.69	0.68	2.6	1.9	1.7	8.4	5.1	**FD 03**	5	8100	13500	9.5	7.8	**FA 03**	5	13500	9.5	7.5
0.25	**M 1SD**	**6**	900	2.7	○	62.0	58.5	51.4	0.71	0.82	2.6	1.9	1.7	10.9	6.3	**FD 03**	5	7800	13000	12	9.0	**FA 03**	5	13000	12	8.7
0.37	**M 1LA**	**6**	910	3.9	○	66.0	60.0	53.3	0.69	1.17	3.0	2.4	2.0	12.9	7.3	**FD 53**	7.5	5100	9500	14	10.0	**FA 03**	7.5	9500	14	9.7
0.55	**M 2SA**	**6**	920	5.7	○	70.0	69.8	64.3	0.68	1.67	3.9	2.6	2.2	25	10.6	**FD 04**	15	4800	7200	27	14.5	**FA 04**	15	7200	27	14.4
0.75	**M 2SB**	**6**	920	7.8	•	70.0	70.0	64.4	0.65	2.38	3.8	2.5	2.2	28	11.5	**FD 04**	15	3400	6400	30	15.4	**FA 04**	15	6400	30	15.3
1.1	**M 3SA**	**6**	920	11.4	•	75.0	74.0	72.0	0.72	2.9	4.3	2.0	1.8	33	17	**FD 15**	26	2700	5000	37	23	**FA 15**	26	5000	37	24
1.5	**M 3LA**	**6**	940	15.2	•	75.2	74.2	70.3	0.72	4.0	4.1	2.1	2.0	82	21	**FD 15**	40	1900	4100	86	27	**FA 15**	40	4100	86	28
1.85	**M 3LB**	**6**	930	19.0	•	76.6	72.8	62.6	0.73	4.8	4.6	2.1	2.0	95	23	**FD 15**	40	1700	3600	99	29	**FA 15**	40	3600	99	30
2.2	**M 3LC**	**6**	930	23	•	77.7	76.8	72.4	0.71	5.8	4.7	2.3	2.1	95	23	**FD 55**	55	—	1900	99	29	**FA 15**	55	1900	99	30
3	**M 4SA**	**6**	940	30	•	79.7	77.0	75.1	0.76	7.1	5.1	1.9	1.8	216	34	**FD 56**	75	—	1400	226	47	**FA 06**	75	1400	226	48
4	**M 4LA**	**6**	950	40	•	81.4	81.5	79.5	0.77	9.2	5.5	2.0	1.8	295	43	**FD 06**	100	—	1200	305	56	**FA 07**	100	1200	305	57
5.5	**M 4LB**	**6**	945	56	•	83.1	80.9	79.1	0.78	12.2	6.1	2.1	1.9	383	54	**FD 07**	150	—	1050	406	70	**FA 07**	150	1050	406	72
7.5	**M 5SA**	**6**	955	75	•	85.0	85.0	84.8	0.81	15.7	5.9	2.2	2.0	740	69	**FD 08**	170	—	900	815	98	**FA 08**	170	900	800	98
11	**M 5SB**	**6**	960	109	•	86.4	86.5	85.9	0.81	22.7	6.6	2.5	2.3	970	89	**FD 08**	200	—	800	1045	119	**FA 08**	200	800	1030	118

○ = n.a. • = IE1

2/4P — 3000/1500 min^{-1} - S1 — 50 Hz

P_n kW			n min^{-1}	M_n Nm	η %	cosφ	In 400V A	Is/In	Ms/Mn	Ma/Mn	J_m x 10^{-4} kgm^2	IM B5 Kg	G.S.-Bremse FD Mod	Mb Nm	Z_o 1/h NB	Z_o 1/h SB	J_m x 10^{-4} kgm^2	IM B5 Kg	W.S.-Bremse FA Mod	Mb Nm	Z_o 1/h	J_m x 10^{-4} kgm^2	IM B5 Kg
0.20	**M 05A**	**2**	2700	0.71	55	0.82	0.64	3.5	2.1	1.9	2.9	4.1	**FD 02**	3.5	2200	2600	3.5	5.8	**FA 02**	3.5	2600	3.5	5.6
0.15		**4**	1350	1.06	49	0.67	0.66	2.6	1.8	1.7					4000	5100					5100		
0.28	**M 1SB**	**2**	2700	0.99	56	0.82	0.88	2.9	1.9	1.7	4.7	4.0	**FD 03**	3.5	2100	2400	5.8	6.7	**FA 03**	3.5	2400	5.8	6.4
0.20		**4**	1370	1.39	59	0.68	1.02	3.1	1.8	1.7					3800	4800					4800		
0.37	**M 1SC**	**2**	2740	1.29	56	0.82	1.16	3.5	1.8	1.8	5.8	4.7	**FD 03**	5	1400	2100	6.9	7.4	**FA 03**	5	2100	6.9	7.1
0.25		**4**	1390	1.72	60	0.73	0.82	3.3	2.0	1.9					2900	4200					4200		
0.45	**M 1SD**	**2**	2780	1.55	63	0.85	1.21	3.8	1.8	1.8	6.9	5.5	**FD 03**	5	1400	2100	8.0	8.2	**FA 03**	5	2100	8.0	7.9
0.30		**4**	1400	2.0	63	0.74	0.93	3.8	2.1	1.9					2900	4200					4200		
0.55	**M 1LA**	**2**	2800	1.9	73	0.79	1.38	4.2	2.0	1.8	9.1	6.9	**FD 03**	5	1600	2200	10.2	9.6	**FA 03**	5	2200	10.2	9.3
0.37		**4**	1400	2.5	68	0.72	1.09	3.9	2.2	2.0					3300	4600					4600		
0.75	**M 2SA**	**2**	2780	2.6	65	0.85	1.96	3.8	1.9	1.8	20	9.2	**FD 04**	10	1400	1600	22	13.1	**FA 04**	10	1600	22	13.0
0.55		**4**	1400	3.8	68	0.81	1.44	3.9	1.7	1.7					2700	3600					3600		
1.1	**M 2SB**	**2**	2730	3.9	65	0.86	2.84	3.9	2.0	1.9	25	10.7	**FD 04**	10	1200	1500	27	14.5	**FA 04**	10	1500	27	14.5
0.75		**4**	1410	5.1	75	0.81	1.78	4.5	2.1	2.0					2300	3100					3100		
1.5	**M 3SA**	**2**	2830	5.1	74	0.83	3.5	4.7	2.1	2.0	34	15.5	**FD 15**	26	700	1000	38	22	**FA 15**	26	1000	38	23
1.1		**4**	1420	7.4	77	0.78	2.6	4.3	2.1	2.0					1600	2600					2600		
2.2	**M 3LA**	**2**	2800	7.5	72	0.85	5.2	4.5	2.0	1.9	40	17	**FD 15**	26	600	900	44	24	**FA 15**	26	900	44	24
1.5		**4**	1410	10.2	73	0.79	3.8	4.7	2.0	2.0					1300	2300					2300		
3.5	**M 3LB**	**2**	2850	11.7	80	0.84	7.5	5.4	2.2	2.1	61	23	**FD 15**	40	500	900	65	29	**FA 15**	40	900	65	30
2.5		**4**	1420	16.8	82	0.80	5.5	5.2	2.2	2.2					1000	2100					2100		
4.8	**M 4 SA**	**2**	2900	15.8	81	0.88	9.7	6.0	2.0	1.9	213	42	**FD 06**	50	—	400	233	55	**FA 06**	50	400	233	56
3.8		**4**	1430	25.4	81	0.84	8.1	5.2	2.1	2.1					—	950					950		
5.5	**M 4SB**	**2**	2890	18.2	80	0.87	11.4	5.9	2.4	2.0	213	42	**FD 56**	75	—	350	223	55	**FA 06**	75	350	223	56
4.4		**4**	1440	29	82	0.84	9.2	5.3	2.2	2.0					—	900					900		
7.5	**M 4LA**	**2**	2900	25	82	0.87	15.2	6.5	2.4	2.0	270	51	**FD 06**	100	—	350	280	64	**FA 07**	100	350	280	65
6		**4**	1430	40	84	0.85	12.1	5.8	2.3	2.1					—	950					950		
9.2	**M 4LB**	**2**	2920	30	83	0.86	18.6	6.0	2.6	2.2	319	57	**FD 07**	150	—	300	342	73	**FA 07**	150	300	342	75
7.3		**4**	1440	48	85	0.85	14.6	5.5	2.3	2.1					—	800					800		

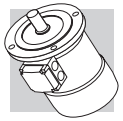

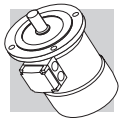

2/6P — 3000/1000 min^{-1} - S3 60/40% — 50 Hz

P_n kW			n min^{-1}	M_n Nm	η %	cosφ	In 400V A	Is/In	Ms/Mn	Ma/Mn	J_m x 10^{-4} kgm^2	IM B5 Kg	G.S.-Bremse FD Mod	Mb Nm	Z_o 1/h NB	Z_o 1/h SB	J_m x 10^{-4} kgm^2	IM B5 Kg	W.S.-Bremse FA Mod	Mb Nm	Z_o 1/h	J_m x 10^{-4} kgm^2	IM B5 Kg
0.25	M 1SA	2	2850	0.84	60	0.82	0.73	4.3	1.9	1.8	6.9	5.5	FD 03	1.75	1500	1700	8.0	8.2	FA 03	1.75	1700	8.0	7.9
0.08		6	910	0.84	43	0.70	0.38	2.1	1.4	1.5					10000	13000					13000		
0.37	M 1LA	2	2880	1.23	62	0.80	1.08	4.4	1.9	1.8	9.1	6.9	FD 03	3.5	1000	1300	10.2	9.6	FA 03	3.5	1300	10.2	9.3
0.12		6	900	1.27	44	0.73	0.54	2.4	1.4	1.5					9000	11000					11000		
0.55	M 2SA	2	2800	1.88	63	0.86	1.47	4.5	1.9	1.7	20	9.2	FD 04	5	1500	1800	22	13.1	FA 04	5	1800	22	13.0
0.18		6	930	1.85	52	0.65	0.77	3.3	2.0	1.9					4100	6300					6300		
0.75	M 2SB	2	2800	2.6	66	0.87	1.89	4.3	1.8	1.6	25	10.6	FD 04	5	1700	1900	27	14.5	FA 04	5	1900	27	14.4
0.25		6	930	2.6	54	0.67	1.00	3.2	1.7	1.8					3800	6000					6000		
1.1	M 3SA	2	2870	3.7	71	0.82	2.73	4.9	1.8	1.9	34	15.5	FD 15	13	1000	1300	38	22	FA 15	13	1300	38	23
0.37		6	930	3.8	63	0.70	1.21	3.1	1.5	1.8					3500	5000					5000		
1.5	M 3LA	2	2880	5.0	73	0.84	3.53	5.1	1.9	2.0	40	17	FD 15	13	1000	1200	44	24	FA 15	13	1200	44	24
0.55		6	940	5.6	64	0.67	1.85	3.5	1.7	1.8					2900	4000					4000		
2.2	M 3LB	2	2900	7.2	77	0.85	4.9	5.9	2.0	2.0	61	23	FD 15	26	700	900	65	29	FA 15	26	900	65	30
0.75		6	950	7.5	67	0.64	2.5	3.3	1.9	1.8					2100	3000					3000		
3	M 4SA	2	2910	9.9	74	0.88	6.6	5.6	2.0	2.1	170	36	FD 56	37	—	600	182	48	FA 06	37	600	182	50
1.1		6	960	10.9	73	0.68	3.2	4.5	2.2	2.0					—	2200					2200		
4.5	M 4SB	2	2910	14.8	78	0.84	9.9	5.8	1.9	1.8	213	42	FD 56	37	—	500	223	55	FA 06	37	500	223	56
1.5		6	960	14.9	74	0.67	4.4	4.2	1.9	2.0					—	2100					2100		
5.5	M 4LA	2	2920	18.0	78	0.87	11.7	6.2	2.1	1.9	270	51	FD 06	50	—	400	280	64	FA 06	50	400	280	65
2.2		6	960	22	77	0.71	5.8	4.3	2.1	2.0					—	1900					1900		

2/8P — 3000/750 min-1 - S3 60/40% — 50 Hz

													G.S.-Bremse						W.S.-Bremse				
													FD						FA				
P_n kW			n min-1	M_n Nm	η %	cosφ	In 400V A	Is/In	Ms/Mn	Ma/Mn	J_m x 10^{-4} kgm²	IM B5 Kg	Mod	Mb Nm	Z_o 1/h NB	Z_o 1/h SB	J_m x 10^{-4} kgm²	IM B5 Kg	Mod	Mb Nm	Z_o 1/h	J_m x 10^{-4} kgm²	IM B5 Kg
0.37	**M 1LA**	**2**	2800	1.26	63	0.86	0.99	3.9	1.8	1.9	12.9	7.3	**FD 03**	3.5	1200	1300	14	10.0	**FA 03**	3.5	1300	14	9.7
0.09		**8**	670	1.28	34	0.75	0.51	1.8	1.4	1.5					9500	13000					13000		
0.55	**M 2SA**	**2**	2830	1.86	66	0.86	1.40	4.4	2.1	2.0	20	9.2	**FD 04**	5	1500	1800	22	13.1	**FA 04**	5	1800	22	13.0
0.13		**8**	690	1.80	41	0.64	0.72	2.3	1.6	1.7					5600	8000					8000		
0.75	**M 2SB**	**2**	2800	2.6	68	0.88	1.81	4.6	2.1	2.0	25	10.6	**FD 04**	10	1700	1900	27	14.5	**FA 04**	10	1900	27	14.4
0.18		**8**	690	2.5	43	0.66	0.92	2.3	1.6	1.7					4800	7300					7300		
1.1	**M 3SA**	**2**	2870	3.7	69	0.84	2.74	4.6	1.8	1.7	34	15.5	**FD 15**	13	1000	1300	38	22	**FA 15**	13	1300	38	23
0.28		**8**	690	3.9	44	0.56	1.64	2.3	1.4	1.7					3400	5000					5000		
1.5	**M 3LA**	**2**	2880	5.0	69	0.85	3.69	4.7	1.9	1.8	40	17	**FD 15**	13	1000	1200	44	24	**FA 15**	13	1200	44	24
0.37		**8**	690	5.1	46	0.63	1.84	2.1	1.6	1.6					3300	5000					5000		
2.4	**M 3LB**	**2**	2900	7.9	75	0.82	5.6	5.4	2.1	2.0	61	23	**FD 15**	26	550	700	65	29	**FA 15**	26	700	65	30
0.55		**8**	700	7.5	54	0.58	2.5	2.6	1.8	1.8					2000	3500					3500		
3	**M 4SA**	**2**	2920	9.8	72	0.85	7.1	5.6	2.0	1.8	162	36	**FD 56**	37	—	600	182	48	**FA 06**	37	600	182	50
0.75		**8**	710	10.1	61	0.64	2.8	3.0	1.7	1.8					—	3400					3400		
4	**M 4SB**	**2**	2870	13.3	73	0.84	9.4	5.6	2.3	2.4	213	42	**FD 56**	37	—	500	223	55	**FA 06**	37	500	223	56
1		**8**	690	13.8	66	0.62	3.5	2.9	1.9	1.8					—	3500					3500		
5.5	**M 4LA**	**2**	2870	18.3	75	0.84	12.6	6.1	2.4	2.5	270	51	**FD 06**	50	—	400	280	64	**FA 06**	50	400	280	65
1.5		**8**	690	21	68	0.63	5.1	2.9	1.9	1.9					—	2400					2400		

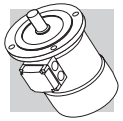

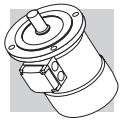

2/12P — 3000/500 min^{-1} - S3 60/40% — 50 Hz

P_n kW			n min^{-1}	M_n Nm	η %	cosφ	In 400V A	Is/In	Ms/Mn	Ma/Mn	J_m x 10^{-4} kgm^2	IM B5 Kg	G.S.-Bremse FD Mod	Mb Nm	Z_o 1/h NB	Z_o 1/h SB	J_m x 10^{-4} kgm^2	IM B5 Kg	W.S.-Bremse FA Mod	Mb Nm	Z_o 1/h	J_m x 10^{-4} kgm^2	IM B5 Kg
0.55	**M 2SA**	**2**	2820	1.86	64	0.89	1.39	4.2	1.6	1.7	25	10.6	**FD 04**	5	1000	1300	27	14.5	**FA 04**	5	1300	27	14.4
0.09		**12**	430	2.0	30	0.63	0.69	1.8	1.9	1.8					8000	12000					12000		
0.75	**M 3SA**	**2**	2900	2.5	65	0.81	2.06	5.2	1.9	2.1	34	15.5	**FD 15**	13	700	900	38	22	**FA 15**	13	900	38	23
0.12		**12**	460	2.5	33	0.43	1.22	1.9	1.3	1.6					5000	7000					7000		
1.1	**M 3LA**	**2**	2850	3.7	65	0.85	2.87	4.5	1.6	1.8	40	17	**FD 15**	13	700	900	44	24	**FA 15**	13	900	44	24
0.18		**12**	430	4.0	26	0.54	1.85	1.5	1.3	1.5					4000	6000					6000		
1.5	**M 3LB**	**2**	2900	4.9	67	0.86	3.76	5.6	1.9	1.9	54	21	**FD 15**	13	700	900	58	27	**FA 15**	13	900	58	28
0.25		**12**	440	5.4	36	0.46	2.18	1.8	1.7	1.8					3800	5000					5000		
2	**M 3LC**	**2**	2850	6.7	70	0.84	4.9	4.9	1.8	1.7	61	23	**FD 55**	18	—	700	65	29	**FA 15**	18	700	65	30
0.3		**12**	450	6.4	38	0.47	2.4	1.7	1.6	1.7					—	3500					3500		
3	**M 4SA**	**2**	2920	9.8	74	0.87	6.7	6.8	2.3	1.9	213	42	**FD 56**	37	—	450	223	55	**FA 06**	37	450	223	56
0.5		**12**	470	10.2	51	0.43	3.3	2.0	1.7	1.6					—	3000					3000		
4	**M 4LA**	**2**	2920	13.1	75	0.89	8.6	5.9	2.4	2.3	270	51	**FD 56**	37	—	400	280	64	**FA 06**	37	400	280	65
0.7		**12**	460	14.5	53	0.44	4.3	1.9	1.7	1.6					—	2800					2800		

BN - IM B5

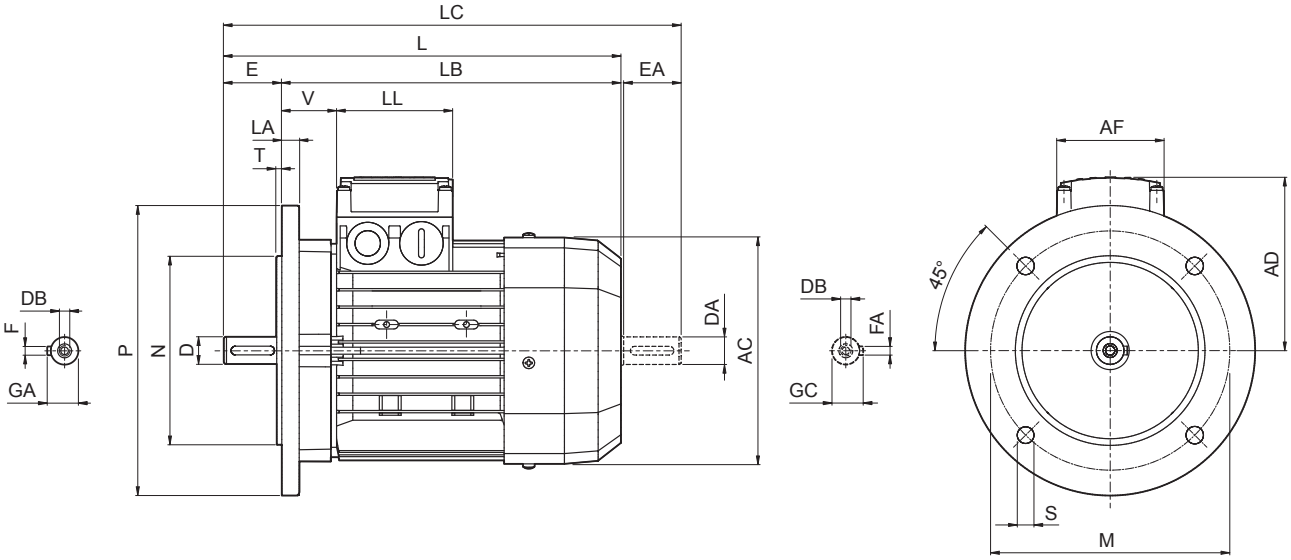

	Welle					Flansch						Motor							
	D DA	**E EA**	**DB**	**GA GC**	**F FA**	**M**	**N**	**P**	**S**	**T**	**LA**	**AC**	**L**	**LB**	**LC**	**AD**	**AF**	**LL**	**V**
BN 56	9	20	M3	10.2	3	100	80	120	7	3	8	110	185	165	207	91	74	80	34
BN 63	11	23	M4	12.5	4	115	95	140	9.5		10	121	207	184	232	95			26
BN 71	14	30	M5	16	5	130	110	160		3.5		138	249	219	281	108			37
BN 80	19	40	M6	21.5	6	165	130	200	11.5		11.5	156	274	234	315	119			38
BN 90	24	50	M8	27	8							176	326	276	378	133	98	98	44
BN 100	28	60	M10	31		215	180	250	14	4	14	195	367	307	429	142			50
BN 112											15	219	385	325	448	157			52
BN 132	38	80	M12	41	10	265	230	300			16	258	493	413	576	193	118	118	58
BN 160 MR	42 38 (1)	110 80 (1)	M16 M12 (1)	45 41 (1)	12 10 (1)	300	250	350	18.5	5	15		562	452	645				218
BN 160 M												310	596	486	680	245	187	187	51
BN 160 L																			
BN 180 M	48 38 (1)	110 110 (1)	M16 M12 (1)	51.5 41 (1)	14 10 (1)							310	640	530	724				
BN 180 L	48 42 (1)		M16 M16 (1)	51.5 45 (1)	14 12 (1)						18	348	708	598	823	261			52
BN 200 L	55 42 (1)		M20 M16 (1)	59 45 (1)	16 12 (1)	350	300	400					722	612	837				66

HINWEIS:
1) Diese Maße betreffen das zweite Wellenende.

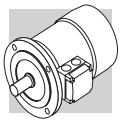

BN_FD ; IM B5

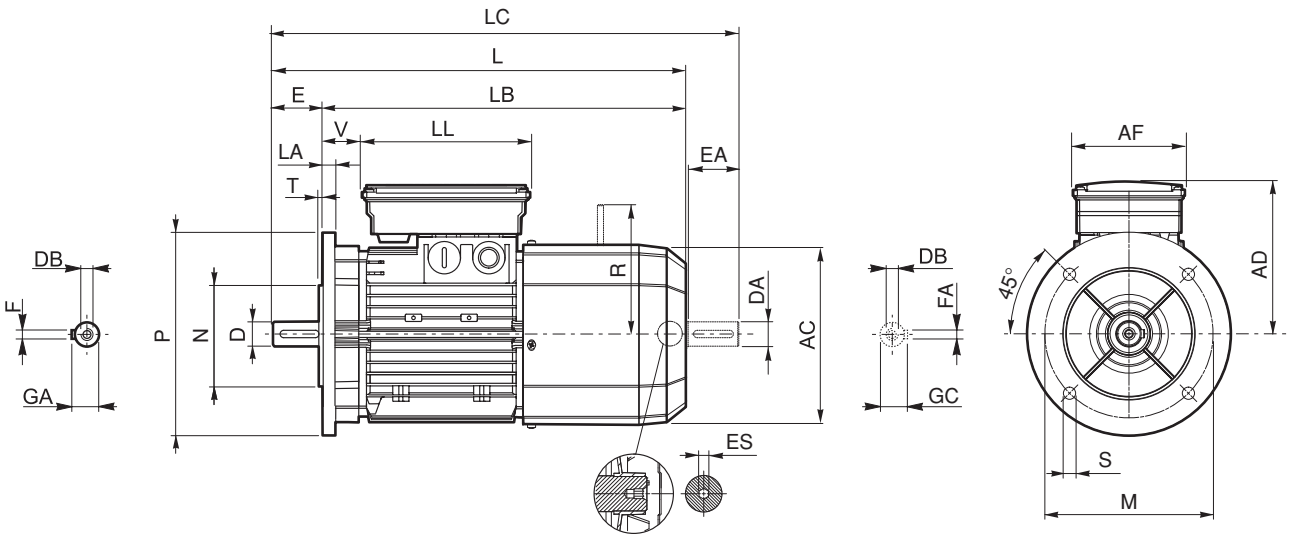

	Welle					Flansch						Motor									
	D DA	E EA	DB	GA GC	F FA	M	N	P	S	T	LA	AC	L	LB	LC	AD	AF	LL	V	R	ES
BN 63	11	23	M4	12.5	4	115	95	140	9.5	3	10	121	272	249	297	122	98	133	14	96	5
BN 71	14	30	M5	16	5	130	110	160	9.5	3.5		138	310	280	342	135			25	103	
BN 80	19	40	M6	21.5	6	165	130	200	11.5		11.5	156	346	306	388	146			41	129	
BN 90 S	24	50	M8	27	8							176	409	359	461	149	110	165	39		6
BN 90 L																146				160	
BN 100	28	60	M10	31		215	180	250	14	4	14	195	458	398	521	158		165	62		
BN 112											15	219	484	424	547	173		165	73	199	
BN 132	38	80	M12	41	10	265	230	300			20	258	603	523	686	210	140	188	46	204 (2)	
BN 160 MR	42 38 (1)	110 80 (1)	M16 M12 (1)	45 41 (1)	12 10 (1)	300	250	350	18.5	5	15		672	562	755				161	226	
BN 160 M												310	736	626	820	245	187	187	51	266	—
BN 160 L	42 38 (1)	110 80 (1)	M16 M12 (1)	45 41 (1)	12 10 (1)																
BN 180 M	48 38 (1)			51.5 41 (1)	14 10 (1)								780	670	864						
BN 180 L	48 42 (1)	110 110 (1)	M16 M16 (1)	51.5 45 (1)	14 12 (1)						18	348	866	756	981	261			52	305	
BN 200 L	55 42 (1)		M20 M16 (1)	59 45 (1)	16 12 (1)	350	300	400	18.5				878	768	993				64		

HINWEIS:
1) Diese Maße betreffen das zweite Wellenende.
2) Für Bremse FD07, Maß R=226.

Der Sechskant ES ist bei der Option PS nicht vorhanden.

BN_FA - IM B5

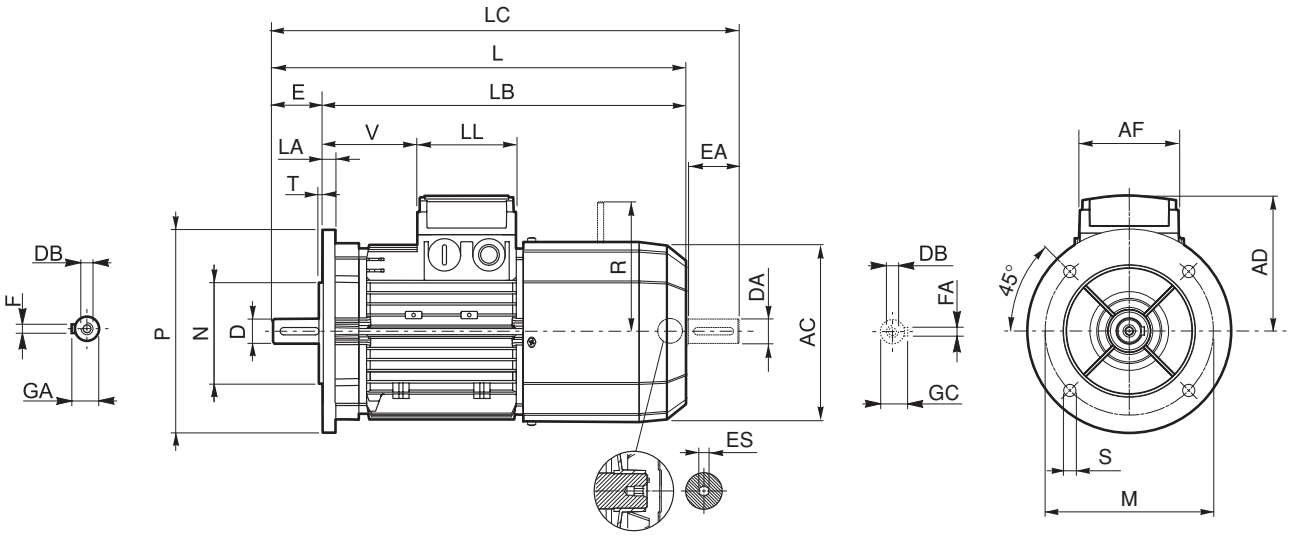

	Welle					Flansch						Motor									
	D DA	E EA	DB	GA GC	F FA	M	N	P	S	T	LA	AC	L	LB	LC	AD	AF	LL	V	R	ES
BN 63	11	23	M4	12.5	4	115	95	140	9.5	3	10	121	272	249	297	95	74	80	26	116	5
BN 71	14	30	M5	16	5	130	110	160		3.5		138	310	280	342	108			68	124	
BN 80	19	40	M6	21.5	6	165	130	200	11.5		11.5	156	346	306	388	119			83	134	
BN 90	24	50	M8	27	8							176	409	359	461	133	98	98	95	160	6
BN 100	28	60	M10	31		215	180	250	14	4	14	195	458	398	521	142			119		
BN 112											15	219	484	424	547	157			128	198	
BN 132	38	80	M12	41	10	265	230	300			20	258	603	523	686	210	140	188	46	200 (2)	
BN 160 MR	42 38 (1)	110 80 (1)	M16 M12 (1)	45 41 (1)	12 10 (1)	300	250	350	18.5	5	15		672	562	755	193	118	118	218	217	
BN 160 M												310	736	626	820	245	187	187	51	247	—
BN 160 L																					
BN 180 M				51.5 41 (1)	14 10 (1)								780	670	864						

HINWEIS:
1) Diese Maße betreffen das zweite Wellenende.
2) Für Bremse FA07, Maß R=217.

Die Abmessungen des Klemmkastens der Motoren BN ... FA AD, AF, LL und V in Bezug auf die separate Spannungsversorgung (Option SA) stimmen mit den Abmessungen der entsprechenden Motoren BN...FD überein.

Der Sechskant ES ist bei der Option PS nicht vorhanden.

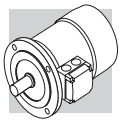

M

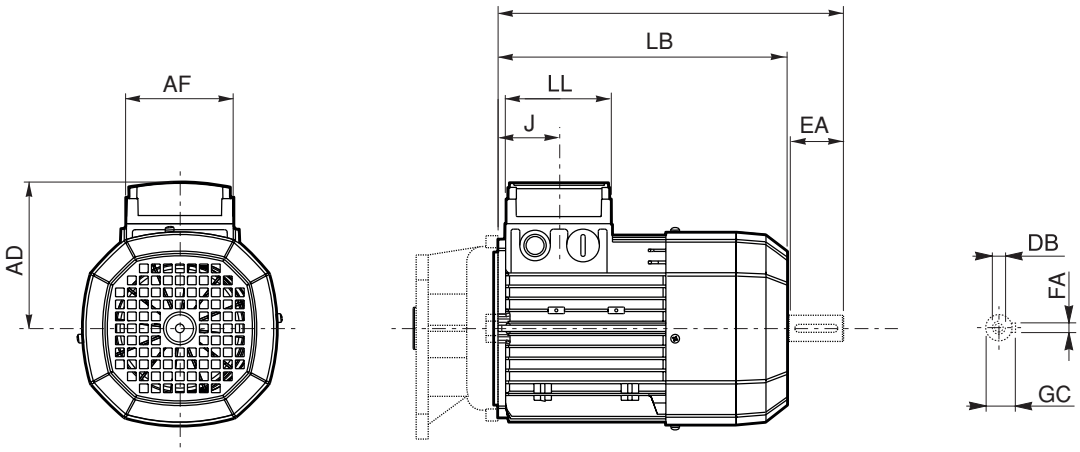

	Zweite Wellenende					Motor						
	DA	**EA**	**DB**	**FA**	**GC**	**AC**	**LB**	**LC**	**AF**	**LL**	**J**	**AD**
M 0	9	20	M3	3	10.2	110	133	155	74	80	42	91
M 05	11	23	M4	4	12.5	121	165	191			48	95
M 1	14	30	M5	5	16	138	187	219			45	108
M 2 S	19	40	M6	6	21.5	156	202	245			44	119
M 3 S	28	60	M10	8	31	195	230	293	98	98	53.5	142
M 3 L							262	325				
M 4	38	80	M12	10	41	258	361	444	118	118	64.5	193
M 4 LC							396	479				
M 5 S						310	418	502	187	187	77	245
M 5 L							462	546				

M_FD

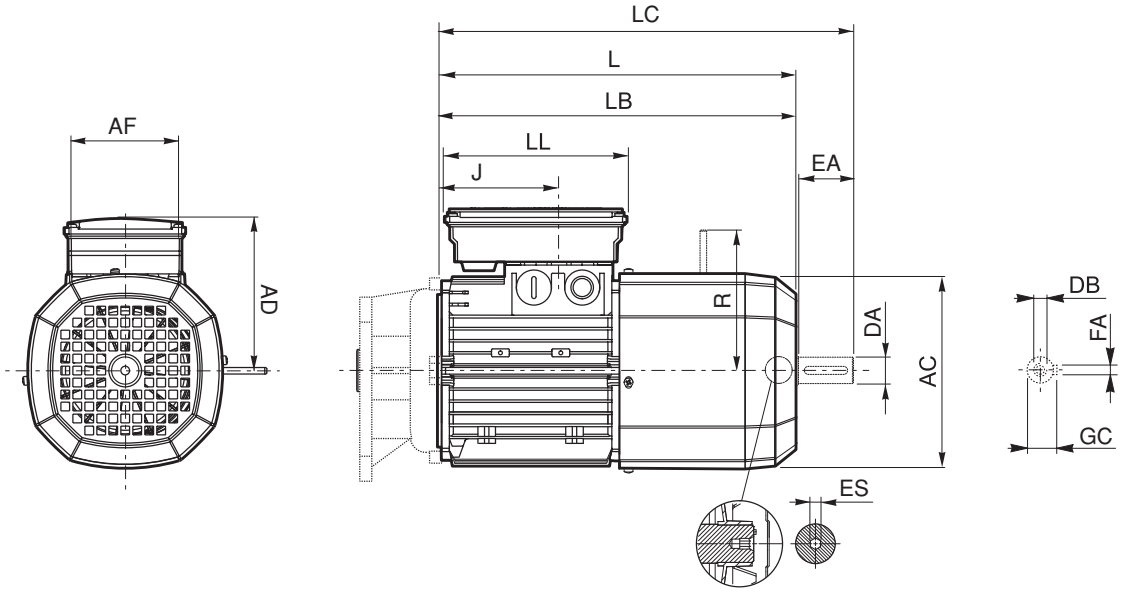

	Zweite Wellenende					Motor								
	DA	**EA**	**DB**	**FA**	**GC**	**AC**	**LB**	**LC**	**AF**	**LL**	**J**	**AD**	**R**	**ES**
M 05	11	23	M4	4	12.5	121	231	256	98	133	48	122	96	5
M 1	14	30	M5	5	16	138	248	280			73	135	103	
M 2 S	19	40	M6	6	21.5	156	272	314			88	146	129	
M 3 S	28	60	M10	8	31	195	326	389	110	165	124.5	158	160	6
M 3 L							353	416						
M 4	38	80	M12	10	41	258	470	553	140	188	185.5	210	204 (1)	
M 4 LC							495	578			64.5		226	
M 5 S						310	558	642	187	187	77	245	266	—
M 5 L							602	686						

HINWEIS:
1) Für Bremse FD07, Maß R=226.

Der Sechskant ES ist bei der Option PS nicht vorhanden.

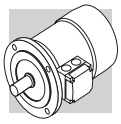

M_FA

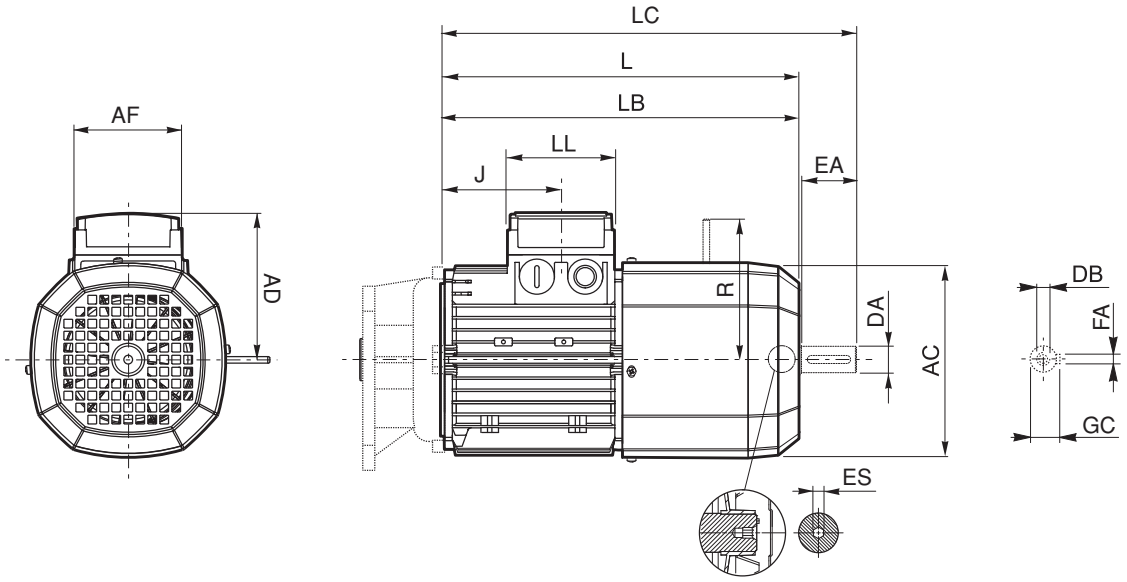

	Zweite Wellenende					Motor								
	DA	**EA**	**DB**	**FA**	**GC**	**AC**	**LB**	**LC**	**AF**	**LL**	**J**	**AD**	**R**	**ES**
M 05	11	23	M4	4	12.5	121	231	256	74	80	48	95	116	5
M 1	14	30	M5	5	16	138	248	280			73	108	124	
M 2 S	19	40	M6	6	21.5	156	272	314			88	119	134	
M 3 S	28	60	M10	8	31	195	326	389	98	98	124.5	142	160	6
M 3 L							353	416						
M 4	38	80	M14	10	41	258	470	553	140	188	185.5	210	200 (1)	
M 4 LC							495	578			64.5		217	
M 5 S			M12			310	558	642	187	187	77	245	247	—
M 5 L							602	686						

HINWEIS:
1) Für Bremse FA07, Maß R=217.

Die Abmessungen des Klemmkastens der Motoren M ...FA AD, AF, LL und V in Bezug auf die separate Spannungsversorgung (Option SA) stimmen mit den Abmessungen der entsprechenden Motoren M...FD überein.

Der Sechskant ES ist bei der Option PS nicht vorhanden.

LISTE DER ÄNDERUNGEN

BR_CAT_CAFS_IE2-IE3_DEU_R05_0	
	Beschreibung
496…570	Aktualisiert Kapitel “Elektrische Motoren”

2015 10 02

Diese Veröffentlichung annuliert und ersetzt jede vorhergehende Ausgabe oder Revision. BONFIGLIOLI behält sich das Recht vor, Änderungen ohne vorherige Informationen durchzuführen.

Bonfiglioli
Forever Forward

Seit 1956 plant und realisiert Bonfiglioli innovative und zuverlässige Lösungen für die Leistungsüberwachung und -übertragung in industrieller Umgebung und für selbstfahrende Maschinen sowie Anlagen im Rahmen der erneuerbaren Energien.

HEADQUARTERS
Bonfiglioli Riduttori S.p.A.
Via Giovanni XXIII, 7/A
40012 Lippo di Calderara di Reno
Bologna (Italy)

tel: +39 051 647 3111
fax: +39 051 647 3126
bonfiglioli@bonfiglioli.com
www.bonfiglioli.com

BR_CAT_CAFS_IE2-IE3_DEU_R05_0