Ex belt-alignment switches
Ex ZS 73 SR 1Ö/1S - 3m
Material number: 1181801 (Material number old: 73031301)

Features/Options

- Ex zone 1 and 21
- Metal enclosure
- 2 contacts
- Cable
- Belt-alignment roller made of stainless steel 1.4104
- N.B.: Please state required approvals for Russia and Brazil with your order!

Dimensions

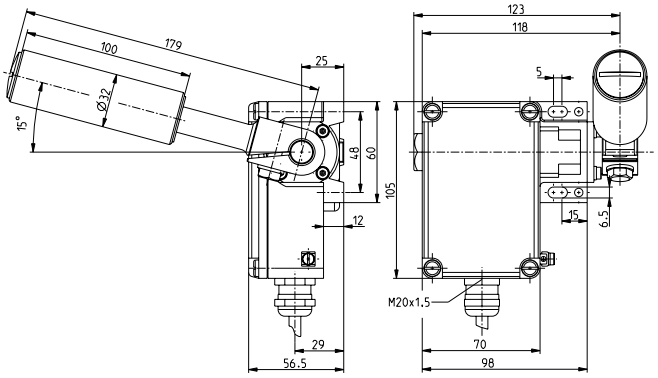

Switching diagram

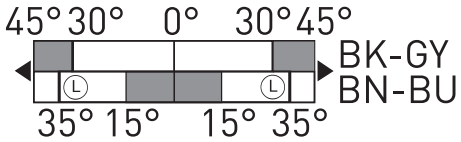

Technical data

Standards	EN 60947-5-1, -5; EN 60079-0, EN 60079-1, EN 60079-31; EN ISO 13849-1
Enclosure	aluminium die-cast, enamel finish
Cover	glass-fibre reinforced, shock-proof thermoplastic, ultramid
Switch insert	Ex 14
Degree of protection	IP 65 to IEC/EN 60529
Contact material	silver
Switching system	slow action, positive break NC contacts ⊖
Switching elements	change-over contact with double break
Connection	pre-wired cable H05VV-F
Cable cross-section	4 x 0.75 mm² (incl. conductor ferrules)
Cable length	3 m
B_{10d} (10 % Load)	2 million
T_M	max. 20 years
U_{imp}	4 kV
U_i	250 V
I_{the}	T6: 6 A, T5: 3 A
I_e/U_e	6 A/250 VAC; 0.25 A/230 VDC
Utilisation category	AC-15; DC-13
Max. fuse rating	6 A gG/gN fuse
Ambient temperature	T6: –20 °C ... +65 °C, T5: –20 °C ... +90 °C
Mechanical life	> 1 million operations
Ex marking	Ⓔx II 2G Ex d IIC T6/T5 Gb, Ⓔx II 2D Ex tb IIIC T80 °C/T95 °C Db IECEx Ex d IIC T6/T5 Gb, Ex tb IIIC T80 °C/T95 °C Db
Approvals	PTB 11 ATEX 1003 X IECEx PTB 07.0034 X EAC Ex INMETRO c SP US
Weight	1000 g

Errors and omissions excepted.

steute Schaltgeräte GmbH & Co. KG | Brückenstraße 91 32584 Löhne, Germany | Telefon +49 (0) 5731 745-0 Telefax +49 (0) 5731 745-200 | info@steute.com www.steute.com