PUSH KNOB LATCH

3.1×10
3.1×28
STAINLESS

PKL-08

- Door Thickness: 15 mm~30 mm (19/32"~3/16"), for doors 13 mm thick, use a 2 mm plastic spacer (sold separately).
- Order latch body (PKL-S/xxx) and push knob (PKL-08/xxx) for a complete set.
- Door will be locked when knob is pushed in.
- Holding Force : 10 kg (22 lbs)
- Non-handed.
- Note: To avoid damage to the unit, do not activate the latch before closing the door.

*Please specify latch body color when ordering.
*Available in white (WHT) or black (BLK).
*Latch body and push knob sold separately.

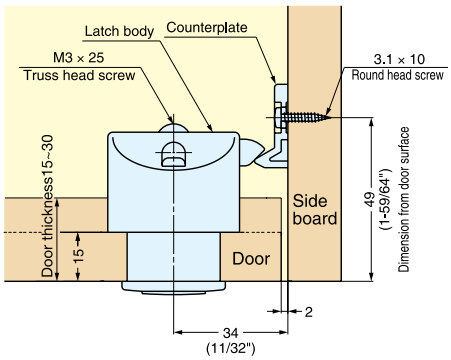

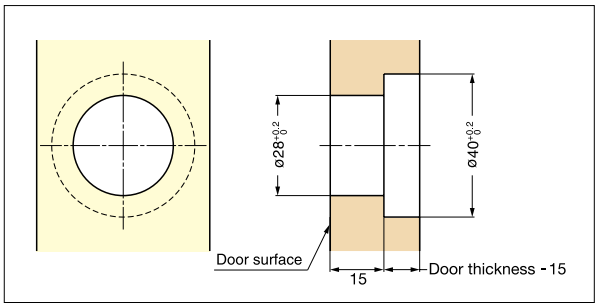

Bore Dimensions

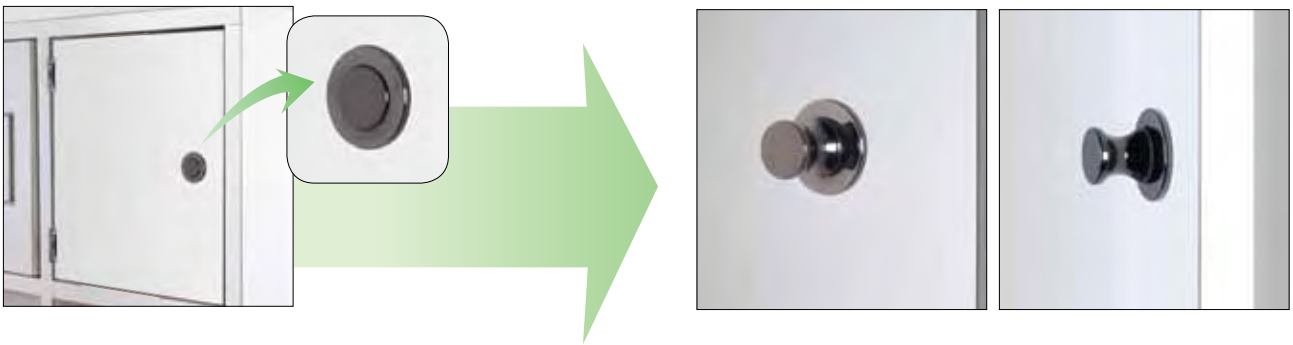

For both inset and overlay door.
Step 1: When the door is closed, the latch is engaged.
Step 2: Push the knob to flush position to lock the latch.
Step 3: Push the knob again to out position to unlock the latch.

Item No.	Part Name	Finish	Weight (g)	Box (pcs)	Carton (pcs)
PKL-08/GA	Push Knob	Gold	63	20	200
PKL-08/CR		Chrome			
PKL-08/BN		Black Nickel			
PKL-S/WHT	Latch Body	White	2		
PKL-S/BLK		Black			
PKL-Spacer/WHT	Spacer	White	1	500	5000
PKL-Spacer/BLK		Black			

Part Name	Material	Finish
		Knob
Latch Body	ABS	Gold, Chrome, Black Nickel
Push Knob	Zinc Alloy	
Counterplate	ABS	