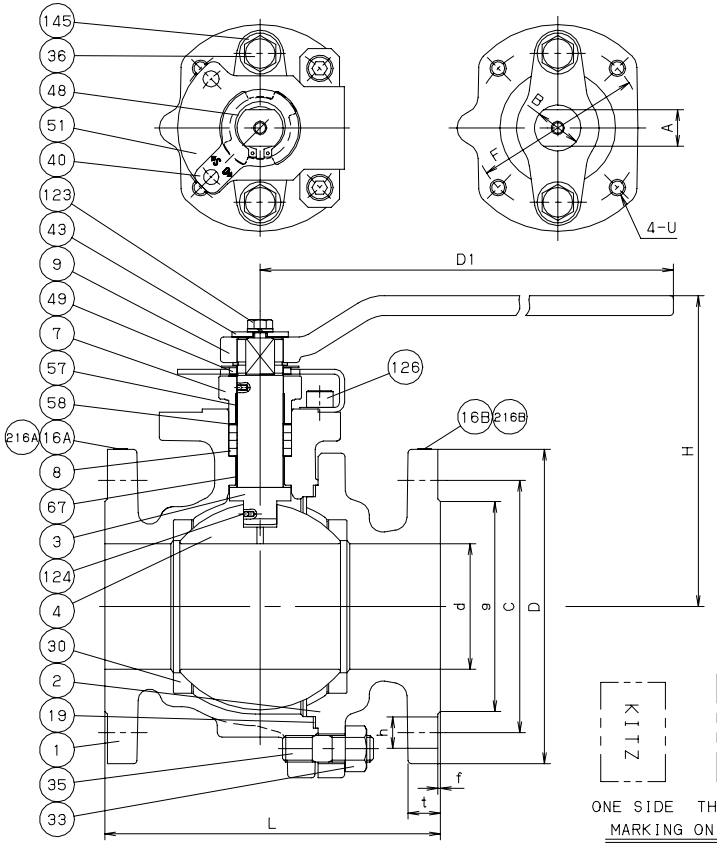

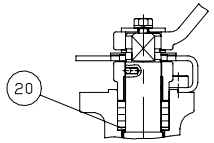

UP TO SIZE 1

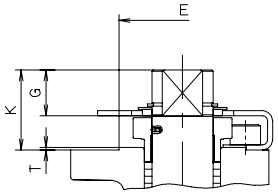

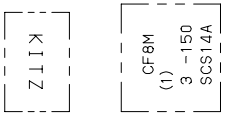

ONE SIDE THE OTHER SIDE
MARKING ON THE BODY

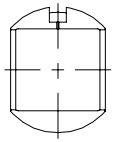

SIZE 5 ONLY

DIMENSIONS

UNIT:mm

NOMINAL SIZE in.	NOMINAL SIZE mm	d	H	D1	L	END FLANGE D	BOLT HOLE C	BOLT HOLE NO.	BOLT HOLE h	BOLT SIZE	g	t	f	MOUNTING DEMENSION FOR ACTUATOR A	B	E	F	G	K	T	U	ISO5211 FLANGE TYPE	APPROX. MASS (kg)
1/2	15	14	108	130	108	89	60.5	4	16	1/2	35	11.2	1.6	9	12	25	36	9	22	1	M5	F03	2.6
3/4	20	19	111	130	117	98	70.0	4	16	1/2	43	11.2	1.6	9	12	25	36	9	22	1	M5	F03	2.8
1	25	24	124	160	127	108	79.5	4	16	1/2	51	11.2	1.6	14	18	35	50	14	30	1.5	M6	F05	4.5
1.1/2	40	38	134	230	165	127	98.5	4	16	1/2	73	14.3	1.6	17	22	55	70	17	34	1.5	M8	F07	8.5
2	50	50	143	230	178	152	120.5	4	19	5/8	92	15.9	1.6	17	22	55	70	17	34	1.5	M8	F07	11.4
2.1/2	65	64	179	400	190	178	139.5	4	19	5/8	105	17.5	1.6	22	28	70	102	22	45	2	M10	F10	19.7
3	80	76	189	400	203	190	152.5	4	19	5/8	127	19.1	1.6	22	28	70	102	22	45	2	M10	F10	25
4	100	100	224	460	229	229	190.5	8	19	5/8	157	23.9	1.6	27	36	85	125	27	52	2	M12	F12	45
5	125	123	240	460	356	254	216.0	8	22	3/4	186	23.9	1.6	27	36	85	125	27	52	2	M12	F12	60

NOTE (1) VALVE SIZE(inch) IDENTIFICATION.

NO	NAME OF PARTS	QTY	MATERIALS	SPECIFICATIONS
·	·	·	·	· ASTM SPEC.
· 1	BODY	·1	STAINLESS STEEL	A351 Gr.CF8M
· 2	BODY CAP	·1	STAINLESS STEEL	A351 Gr.CF8M
· 3	STEM	·1	STAINLESS STEEL	A276 TYPE316
· 4	BALL	·1	STAINLESS STEEL	A276 TYPE316 OR
·	·	·	·	A351 Gr.CF8M
· 7	GLAND	·1	STAINLESS STEEL	A351 Gr.CF8M
· 8	GLAND PACKING	·1S	FLEXIBLE GRAPHITE	·
· 9	HANDLE	·1	DUCTILE IRON	·
·16A	NAME PLATE	·1	STAINLESS STEEL	A276 TYPE304
·16B	LEV PLATE	·1	STAINLESS STEEL	A276 TYPE304
·19	GASKET	·1	FLEXIBLE GRAPHITE	·
·20	PACKING WASHER	·1	STAINLESS STEEL	A276 TYPE316L
·	·	·	·	·(UP TO SIZE 1)
·30	BALL SEAT	·2	HYPATITE PTFE	·
·33	CAP NUT	·1S	STAINLESS STEEL	A194 Gr.8M
·35	CAP BOLT	·1S	STAINLESS STEEL	A193 Gr.B8M
·36	GLAND BOLT	·2	STAINLESS STEEL	·
·40	KEYLOCK PLATE	·1	STAINLESS STEEL	A276 TYPE304
·43	HANDLELOCK PLATE	·1	STAINLESS STEEL	A276 TYPE304
·48	SNAP RING	·1	STAINLESS STEEL	A276 TYPE304
·49	STOPPER	·1	STAINLESS STEEL	A276 TYPE304
·51	STOPPER PLATE	·1	STAINLESS STEEL	A276 TYPE304
·57	GLAND BUSH	·1	G/F PTFE	·
·58	GLAND WASHER	·1	STAINLESS STEEL	A276 TYPE304
·67	STEM BEARING	·1	G/F PTFE	·
123	HANDLELOCK PLATE BOLT	·1	STAINLESS STEEL	·
124	SPRING & PIN	·2S	STAINLESS STEEL	A313 & A276 TYPE316
126	STOPPER PLATE BOLT	·2	STAINLESS STEEL	·
145	CONED DISC SPRING	·2	STAINLESS STEEL	·
216A	CE PLATE	·1	STAINLESS STEEL	A276 TYPE304
·	·	·	·	·(SIZE 1.1/2& OVER)
216B	ATEX PLATE	·1	STAINLESS STEEL	A276 TYPE304
·	·	·	·	·
·	·	·	· 1S=1 SET	·
·	·	·	·	·
·	·	·	·	·
·	·	·	·	·
·	·	·	·	·
·	·	·	·	·
·	·	·	·	·
·	·	·	·	·
·	·	·	·	·
·	·	·	·	·
·	·	·	·	·

STANDARD		
	FACE TO FACE OR END TO END	· ASME B16.10 CLASS 150
	END CONNECTION	· ASME B16.5 CLASS 150
	WALL THICKNESS	· ASME B16.34 CLASS 150
	PRESSURE TEST	· EN 12266
FIGURE		· (T) 150U-TDZM-FS

CE 0062

LOW EMISSION VALVES Level-Ⅱ(Max.50ppm)
CLASS 150 CAST STAINLESS STEEL NACE MR0175

· BALL VALVES

ANTI-STATIC DEVICE, FULL BORE, CONFORM TO ISO5211, FLANGED ENDS.

DATE APPD	NOV.30' 10	DRAWING NO	△	·	·
APPD BY	S. SANADA	· 965-B10250	△	·	·
CHKD BY	I. TAKANO		△	·	·
DSGND BY	Y. MINAI		△	·	·
DRAWD BY	Y. NAKAYAMA	· REV-03	MARK	DATE	BY

KITZ CORPORATION

KITZ