c-line Inverter System

CDA3000

Order catalogue

Drive solutions
750 W up to 15 kW

With firmware:

Basis - for universal use

PLC - for machine sub-automation units

The fast track to your order

Edition August 2013

Order Catalogue Inverter Systems CDA3000

Id.-No.: 0840.24 B.6-00

Stand: August 2013

We reserve the right to make technical changes.

The drive controller with c-line technology

The particular benefits to users of LTi drive controllers lie in the expert solutions delivered for automation with electric drives and in the high level of control engineering know-how available to handle the control of a wide range of motor types. Always keeping an eye on the physics, looking to make electric drive engineering the core element of machine optimisation and automation.

It is a long-established fact in electric drives that the various control methods can complement each other effectively in handling complex automation tasks. The best solution for complex motion tasks will always depend largely on the individual requirements of the user and on the provider's experience and range of equipment. It is therefore a decided advantage if all options can be tapped easily and without changing the equipment concept or even the provider.

Our focus is on custom drive solutions with our:

- Inverter systems 0.75 kW to 15 kW
- Servo system
  - with asynchronous motors up to 425 Nm
  - with synchronous motors up to 245 Nm
- direct-drive system
  - - with hollow shaft motors up to 75 Nm
  - - with linear motors up to 20,000 N

Inverters and servocontrollers based on the same concept

The c-line DRIVES are ideal for virtually any task. They include the CDE/CDB inverters with the Voltage Frequency Control (VFC) method, Field Oriented Regulation (FOR) with encoder evaluation, and Sensorless Flux Control (SFC). The CDD servocontrollers include a highly dynamic speed/torque/position control.

All c-line DRIVES drive controllers have the same basis, with a wide range of variants for specific solutions. A platform of this kind enables rapid, cost-effective response to new developments.

Common features of the c-line DRIVES :

- their design, metal enclosure and cooling method for
  - wall mounting
  - cold plate
  - push-through heat sink
- their excellent EMC performance
- their user-friendly operation with the DRIVEMANAGER PC tool
- easy serial startups with KEYPAD and Chipcard
- the modular networking concept
- the comprehensive range of accessories and complementary components

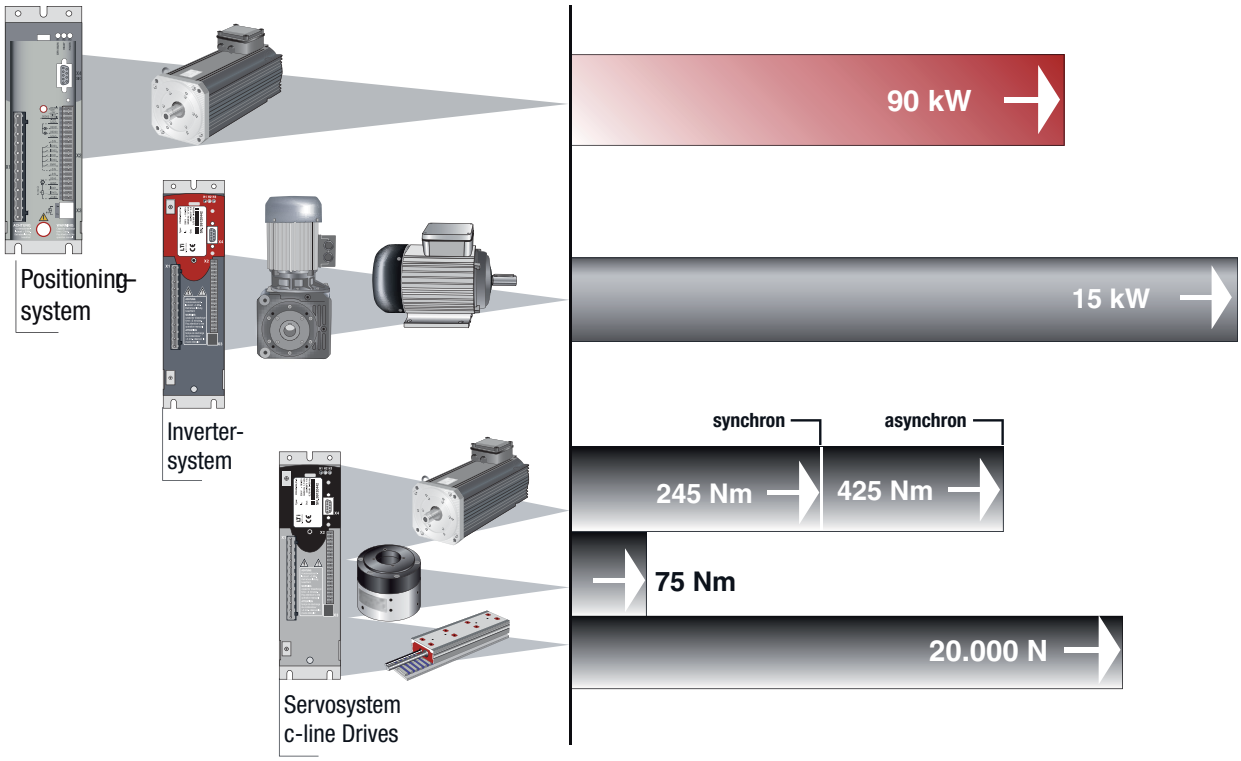

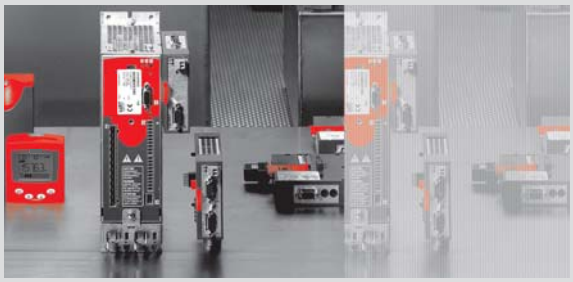

Inverter drive system CDA3000

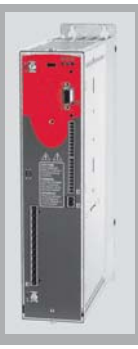

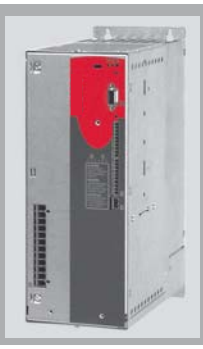

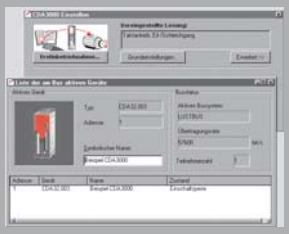

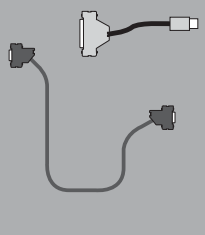

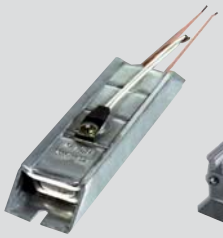

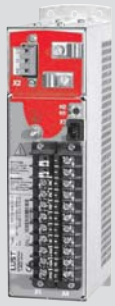

System summary

Inverter modules 2

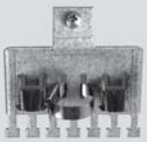

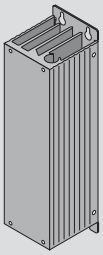

Accessories for inverter modules 3

User and communication modulesl 4

Supplementary components 5

Inverter system CDA3000

Experience and vision

CDA 3000 is the result of years of practical experience in drive technology for automation of machinery and plant. This inverter system is fit for the ever shortening innovation cycle in the automation of machinery.

Founded on tradition

We have continued our long-standing tradition of setting control standards in the drive technology as well as creating standards for the future-oriented flexibility in machinery and plant.

Fit for the future

The inverter module is the central unit of the system and information carrier for the various operator, user and communication modules. All modules are standalone components with all necessary certificates and are tested in terms of connectivity. The interfaces to the docking modules are open for new automation design concepts in future.

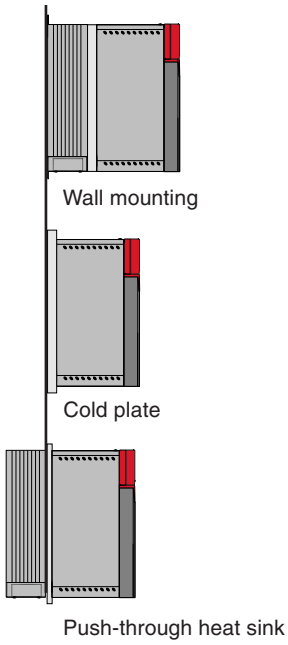

Keep cool

Fully used power components require a cool inverter. The modulare cooling concept offers free selection of the given mounting method. Using cold plate or heat sink in- or outside the mounting place depends on the situation.

Automatically more torque

Mature new technologies results in functional improvements with reliable specifications. With the sensorless flux control (SFC) of LTi attributes like higher output torques, dynamic disturbance control and a wide speed manipulating range can be safely and reproducibly achieved.

Very easy setting via automatic identification of the motor and by means of self-setting of all control circuits. The motto of the CDA3000 is „Starting and run“.

Fast and easy

The concept of the new inverter system is that the user can configure and commission the optimum drive solution more easily and faster, in spite of extended functions and extensive system components.

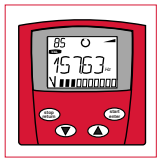

With KEYPAD and the PC-user software DRIVEMANAGER comfortable setting and analysis possibilities are available for all LTi drive controllers. They convince by their stability and didactic sophistication.

Ready-made solutions for traction, lifting and rotation drives highlight only the important parameters. The underlying complexity can only be guessed.

EMV with safety

All devices from 750 W up to 15 kW with sheet-steel housing with aluminium/zinc surface. The housing offers a high protection against interference to the direct environment. To reduce the interference RFI filters are always included in the inverter modules (up to 7.5 kW). This results in a reduction of expenditure as well as in the costs of the whole installation.

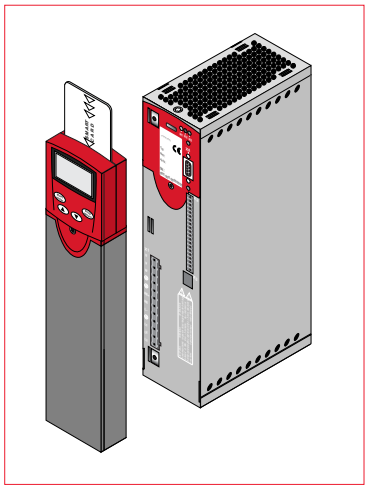

The system architecture for the flexible solutions of the future

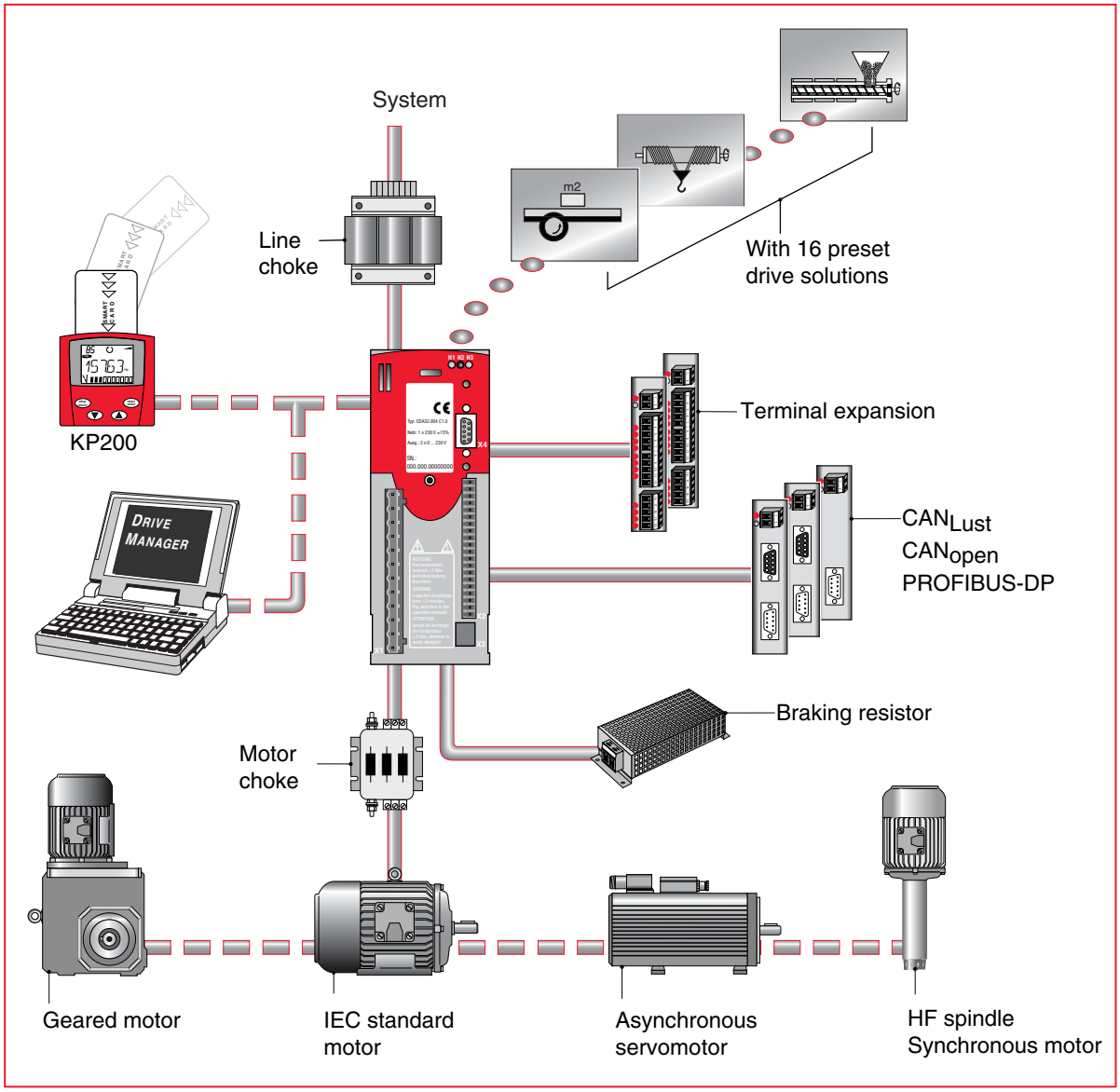

Features

Inverter modules for 230 V systems:

Inverter modules	Rec. 4-pole standard motor [kW]	Device rated power [kVA]	Rated current [A]	Peak current [A]	Size [BG]	Dimensions [mm] width x height x depth
CDA32.004,Cx.x	0.75	1.7	4.0 A	7.2[1)]	BG1	70 x 193 x 152.5
CDA32.006,Cx.x	1.1	2.3	5.5 A	9.9[1)]	BG2	70 x 218 x 177.5
CDA32.008,Cx.x	1.5	3.0	7.1 A	12.8[1)]	BG2	70 x 218 x 177.5

Mains voltage 1 x 230 V -20 % +15 %
Cooling air temperature (1000 m above zero) 45 °C at power stage switching frequency 4 kHz
Rotating field frequency 0 ... 400 Hz

1) 1.8 x I_N for 30 s

Inverter modules for 400/460 V systems:

Inverter modules	Rec. 4-pole standard motor [kW]	Device rated power [kVA]	Rated Current [A]	Peak current [A]	Size [BG]	Dimensions [mm] width x height x depth
CDA34.003,Cx.x	0.75	1.6	2.2	4.0[1)]	BG2	70 x 218 x 177.5
CDA34.005,Cx.x	1.5	3.0	4.1	7.4[1)]	BG2	70 x 218 x 177.5
CDA34.006,Wx.x	2.2	4.2	5.7	10.3[1)]	BG2	70 x 218 x 177.5
CDA34.008,Wx.x	3.0	5.7	7.8	14[1)]	BG3	70 x 303 x 250.5
CDA34.010,Wx.x	4.0	7.3	10	18[1)]	BG3	70 x 303 x 250.5
CDA34.014,Wx.x	5.5	10.2	14	25[1)]	BG4	120 x 303 x 250.5
CDA34.017,Wx.x	7.5	12.4	17	31[1)]	BG4	120 x 303 x 250.5
CDA34.024,Wx.x	11	17.5	24	43[1)]	BG5	170 x 303 x 250.5
CDA34.032,Wx.x	15	23.3	32	58[1)]	BG5	170 x 303 x 250.5

Mains voltage 3 x 460 V -25 % +10 %
Rotating field frequency 0 ... 400 Hz (0,7 to 22 kW)
Rotating field frequency 0 ... 200 Hz (30 to 15 kW)

1) 1.8 x I_N for 30 s

Acceptance tests/

Ambient conditions

CE mark

The inverter modules[1)] meet the requirements of the Low Voltage Directive 2006/95/EG and of the product norm EN 61800-5-1:2003.

The inverter modules[1)] thus meet the requirements for the installation in a machine or plant under the terms of the Machinery Directive 2006/42/EG.

The inverter modules CDA3000[1)] are marked according to CE. The CE mark on the name plate signifies conformance with the above mentioned directives.

On request we will be pleased to issue a Declaration of Conformity.

cUL approbation

The inverter modules[1)] 0,75 up to 15 kW have the cUL-approbation. This cUL approbation is equivalent to UL and CSA approbation.

EMV acceptance tests

All inverter modules[1)] have a sheet-steel housing with an aluminium/zinc surface in order to enhance the interference resistance (acc. to EN61800-3, environments 1 and 2).

To limit line-bound interference emission to the permissible level, all inverter modules up to 7.5 kW are equipped with integrated mains filters, in order to comply with EMV product norm 2004/108/EG.

Public Low Voltage Network:
Residence up to 10 m motor cable

Industrial Low Voltage Network:
Industry up to 25 m motor cable

Additionally an extensive product line with external mains filters for side and substructure mounting is available. For detailed information see chapter „Supplementary Components“.

Feature		Inverter module	User and communication module and KP200-XL
Operation temperature		-10 ...45 ° C (BG1 ... BG5) with power reduction up to 55 ° C	-10 ... 55 °C
Storage temperature		-25 ... +55 °C	
Transport temperature		-25 ... +70 °C	
Relative air humidity		15 ... 85 %, condensation is not permitted	
Mechanical strength acc. IEC 68-2-6	during stationary use	Vibration: 0.075 mm in frequency range 10 ... 58 Hz Shock: 9.8 m/s^2 in frequency range >58 ... 500 Hz	
	during transport	Vibration: 3.5 mm in frequency range 5 ... 9 Hz Shock: 9.8 m/s^2 in frequency range >9 ... 500 Hz	
Protection	Device	IP20 (NEMA 1)	
	Cooling method	Cold Plate IP20 Push-through heat sink IP54 (3 ...15 kW)	Convection IP20
Touch protection		VBG 4	
Mounting height		up to 1000 m above MSL, over 1000 m above MSL with power reduction, max. 2000 m above MSL	

1) applies to user and communication modules, too.

Cooling methods

The basic model of the inverter offers three different mounting and cooling methods (e.g. size 3):

Cold Plate	Wall mounting	Push-through heat sink
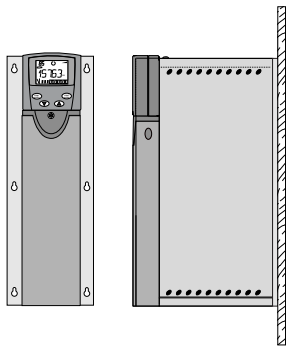	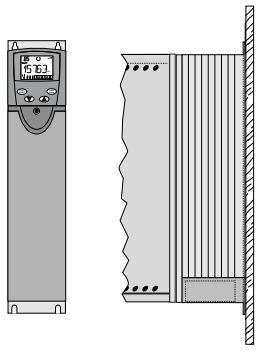	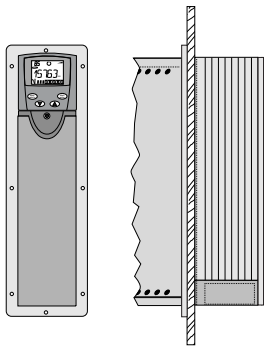

Size	Output	Inverter module	Cold Plate	Wall mounting	Push-through heat sink
BG1	0.75 kW	CDA32.004	YES	YES[1)]	NO
BG2	1.1 kW 1.5 kW 0.75 kW 1.5 kW	CDA32.006 CDA32.008 CDA34.003 CDA34.005	YES	YES[1)]	NO
BG2	2.2 kW	CDA34.006	YES[3)]	YES	NO
BG3	3.0 kW 4.0 kW	CDA34.008 CDA34.010	YES[3)]	YES	YES[2)]
BG4	5.5 kW 7.5 kW	CDA34.014 CDA34.017	YES[3)]	YES	YES[2)]
BG5	11 kW 15 kW	CDA34.024 CDA34.032	YES[3)]	YES	YES[2)]

1) Corresponds to cold plate with heat sink HS3X.xxx as accessories, not in design wall mounting CDA3 ..., Wx.x.
2) Type of protection IP54
3) For sufficient cooling an additional active cooler is necessary.

Motor control method

During commissioning of the inverter three different control methods can be selected.

The necessary identification of the motor is provided automatically by the inverter module based on the „start and run“ concept. All control circuits are optimized in the process as well.

Voltage frequency control (VFC)

With the VFC the voltage of the motor is changed proportionally to the output frequency of the inverter module. This method is suitable for drives of pumps, fans, extruders as well as traction and lifting drives with low dynamic equipped with special motors like reluctance motors.

Sensorless Flux Control (SFC)

The new control method SFC, applicable for asynchronous motors, calculates the rotor speed and the current angle of the rotor from the electrical variables. Based on the calculated information, the currents for the torque formation can favourably be fed into the motor. So it is possible to attain excellent control characteristics without using an expensive encoder.

Field-Oriented Regulation (FOR)

With the FOR rotor and speed positions are calculated with one encoder. Based on those measurement variables, flux and torque can be set independently. Maximum dynamic and high speed accuracy can be reached.

Characteristics	VFC Voltage frequency control	SFC Sensorless flux control	FOR Field-oriented regulation
Torque rise time	20-30 ms	< 2 ms	< 2 ms
Dynamic disturbance correction	NO	YES	YES
Standstill torque	NO	NO	YES
Acceleration torque ($I_{Inverter} = 2 * I_{Motor}$)	$1.2 \cdot M_{Nenn}$	$1.8 \cdot M_{Nenn}$	$2 \cdot M_{Nenn}$
Current usage of inverter	60%	90%	100%
Anti-stall protection	limited	YES	YES
Speed manipulating range $M = M_{Nenn}$	1:20	1:20	1:10000
Static speed accuracy (refers to rated speed)	typically 1 to 5%	typically 0.5%	quartz accurate
Frequency resolution	0.01 Hz	0.0625 Hz	2^{-16} Hz
Motor principle	asynchronous synchronous reluctance	asynchronous	asynchronous

Easy first commissioning

With the PC-user software DRIVEMANAGER the first commissioning of the drive will be comfortable and plain. All you need to do is „click through“.

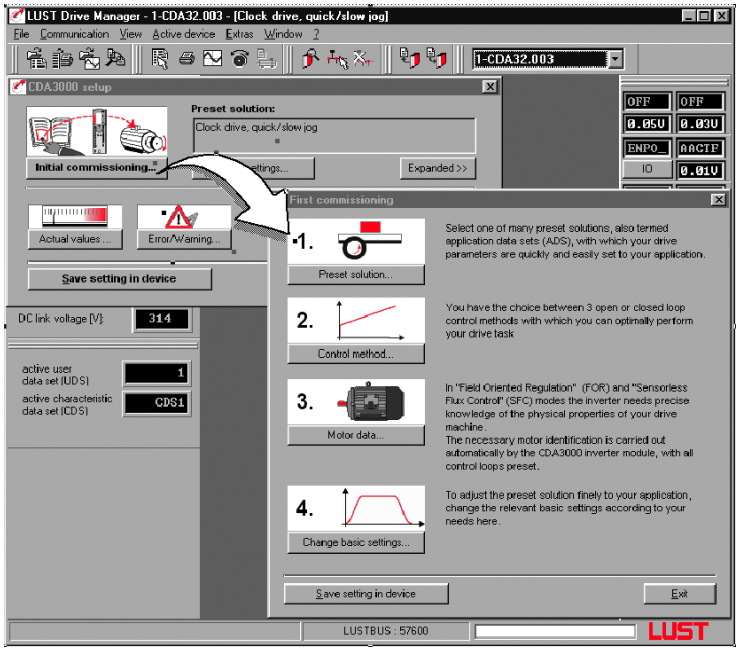

PC-user software DRIVEMANAGE „First commissioning“

1. Preset drive solution

Opens a dialog for selecting the required ready made settings via clicking-on.

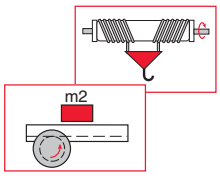

- Conveyor belt drive, rack drive, carriage drive and lifting drive

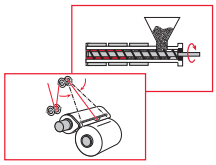

- Spindle drive, extruder, stirrer, disperser and winding drive

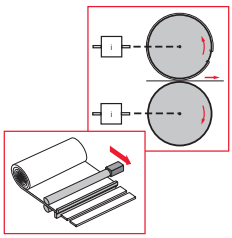

- Electronic gear for worm drives, pack distribution plants and master shaft replacement

- Network operation via CANopen or PROFIBUS-DP

2. Control method

Opens a dialog for selecting one of three control methods:

- Voltage frequency control
- Sensorless speed control
- Field-oriented regulation

3. Motor identification

Starts a menu, supporting you at the input of the motor plate data. The automatic identification of the connected asynchronous motor with the automatic parameter setting of the control circuits completes this step.

4. Basic setting

Starts a menu for fine-adjustment of your drive.

Basic - Firmware

Among the hardware aspects the efficiency of the device firmware will be more and more significant. Finally only the firmware has the intelligence for managing the movement tasks in machinery and plants.

The firmware of the inverter modules CDA3000 supports a number of application features, unthinkable some years ago. The application features can be activated via the graphic user interface, to solve the complete movement tasks acc. to the given situation.

Initial commissioning

Automatic motor identification and autonomous optimization of control loops

Control signals and reference values

- Analog inputs and outputs
- Digital inputs and outputs
- Clock input/output
- Motor holding brake

Protection and limits

- Motor protection (PTC, Klixon, linear PTC)
- Software "device capacity utilization" analysis
- Warning message/fault
- Frequency/speed limits
- and others

Application software features

- Gear function
- Lift mechanism function
- Process controller
- Synchronization to running motor
- MOP function
- Power failure bridging
- 8 additional positioning sets
- Flexible reference structure
- Current-controlled startup
- Driving profile generator with jerk limitation

Voltage Frequency Control

- Current injection
- Slip compensation
- 6 characteristic interpolation points

Sensorless Flux Control

- Current controller (torque controller)
- Speed controller

Field Oriented Regulation

- Torque controller
- Speed controller
- Encoder evaluation

Four complete user data sets can be administered, with one user data set containing two secondary characteristic data sets.

PLC-Firmware

The new PLC firmware consists of the software performance of the basic firmware and an extending PLC-user platform.

Execution of the basic firmware is possible without support of the four user data sets and motor identification via KEYPAD. Therefore we included support of the standard CAN_{OPEN} protocol, in order to manage the structure of a CAN_{OPEN} network via a low cost communication module CM-CAN1.

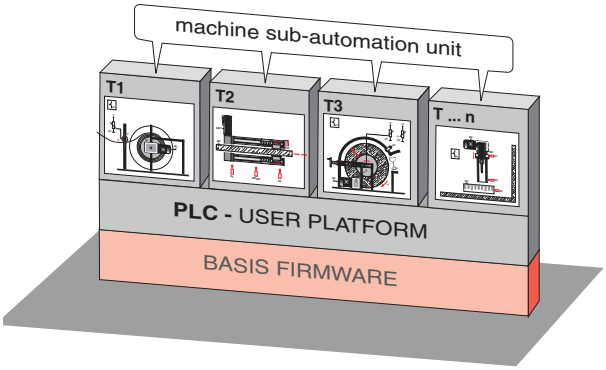

PLC-user Platform

Programming the PLC process program is line-oriented and similar to the program language BASIC. It reduces the time exposure for learning the amount of instructions. Furthermore it has the advantage that the user can read the programs without knowing the exact instruction sets.

PLC-Process Program allows

- flexible setting of control and reference information for all motor control types
- set/read analog and digital i/O's
- direct writing/reading access for all parameters
- mathematic operands (+,-,:,modulo,ABS,round)
- timer and counter functions (12 timer, 11 counter)
- using integer variables, floating point variables and flags
- easy position control

Instruction set consists of:

- Jump signals
- Subroutine call
- Set signals
- Wait signals
- Control, positioning and process signals

PLC-Editor

The PLC editor is a part of the PC-user software DRIVEMANAGER and only necessary for engineering and initial commissioning of your PLC program. The serial commissioning of inverter modules will be effected via the known DriveManager data set or the new SMARTCARD SC-XL.

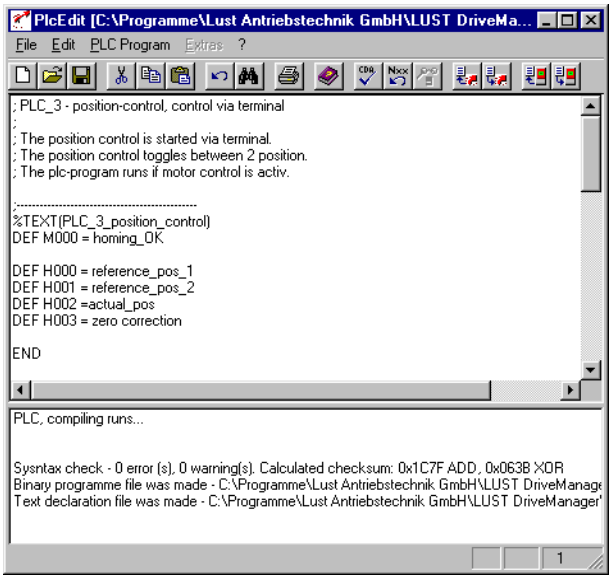

The PLC-program editor offers the functions:

- Program generation
  - Editor for program generation
  - Generation of a text declaration file <project name>.txt for the variables to indicate application-specific tests in the DRIVEMANAGER
  - Syntax check of opcode
  - Renumbering line numbers
- Program handling:
  - Load/Save/Print/Regeneration of programs
  - Load/Save a program from/in a connected drive control.
  - Load/Save a program from/in DRIVEMANAGER-data sets
- Online help to PLC-Editor and to the command syntax with examples

All PLC-functions can be selected via function buttons.

New solution with PLC-firmware

The operational area of PLC-user platform for the generation of automation programs allows a number of new solutions. Solutions, supported by graduated series of Operator Panels.

Already solved machine sub-automation units are:

I/O oriented processes

Motion solution, mainly defining the sequences of the sub-automation process via I/O-signals from the working procedures. Typical applications are:

- Feed unit for drilling and lowering
- Belt and carriage drives
- Drives for doors and gates
- Pumping stations with float switch
- Lifting and rotating tables

Time-controlled processes

Motion solution, mainly defining the sequences of the sub-automation process temporarily. Typical applications are:

- Melting and mixing plants for paints
- different centrifuges and dispersers
- Mills and shredders

Regulated processes

Motion solution, to keep process sizes like torque, traction, pressure, temperature or position constant during the working procedure. It deals with sub-automation processes, like:

- Warbler or dancer control for winders
- Block protection control for shredder
- Simple positioning controls for drives of doors and gates, carriage and rotating drives
- classic pressure, temperature and flow control

Example: Drill feed unit

Process program

```
;Inputs:
;M001=Start feed
;IS01=Pre-stop opener
;IS02=Upper limit switch opener
;IS03=Lower limit switch closer
%TEXT (feed)
DEF H000 = Reference_0
DEF H001 = Timer_1
DEF M002 = Initialisation
DEF H002 = Quick-jog frequency
DEF H003 = Slow-jog frequency
DEF H004 = Waiting time
DEF H010 = Quick-jog_positive
DEF H011 = Quick-jog_negative
DEF H012 = Slow-jog_positive
DEF H013 = Slow-jog_negative
DEF M001 = Start motion

END
```

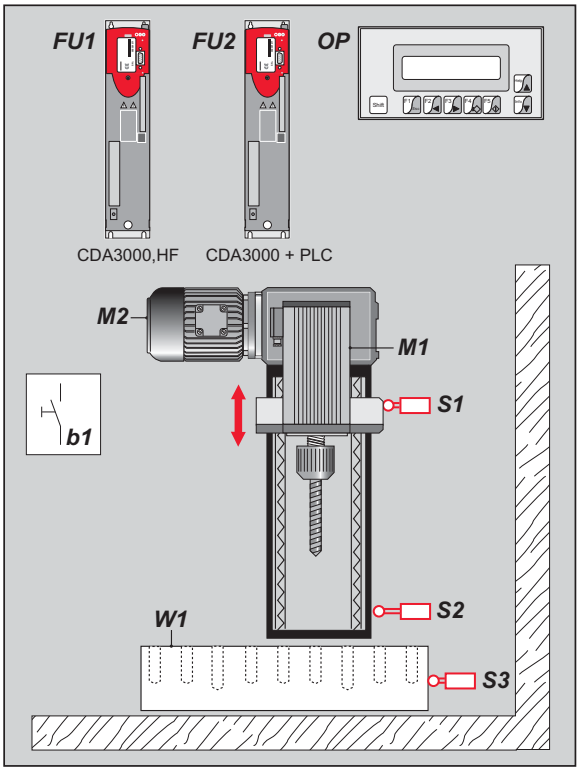

Bild: Bohrvorschubeinheit

```
; Process program for CDA-PLC
%P00
N005 SET H000=0; Reference 0
N010 SET H001=1000; Value for timer 1
N015 JMP (M002=1) N031; Jump over initialising
N020 SET H002=70; Reference feed Hz
N030 SET H003=20; Slow-jog
N031 SET H004=200; Waiting time working point
N032 SET M002=1
N040 SET H010=H002; Variable quick-jog positive
N041 SET H011=H002; Variable quick-jog negative
N042 INV H011
N050 SET H012=H003; Variable slow-jog positive
N051 SET H013=H003
N052 INV H013
N060 JMP (M001=1) N100; Start feed motion
N065 JMP (IS02=0) N040; Upper limit switch reached
N070 SET REFFRQ=H010; Move to upper limit switch
N075 JMP (IS02=1) N075; Wait for reaching limit switch
N080 SET REFFRQ=H000; Stop axis
N081 SET OS00=1; Axis in upper position
N082 SET OS01=0
N085 JMP N040; Close loop
N100 SET REFFRQ=H011; Start feed quick-jog
N105 SET OS00=0; Axis runs
N109 JMP (M001=0) N040
N110 JMP (IS01=1) N109; Control contact pre-stop
N120 SET REFFRQ=H013; Switch-over to low-jog
N129 JMP (M001=0) N040
N130 JMP (IS03=0) N129; Wait for lower limit switch
N140 SET REFFRQ=H000; Stop axis
N150 JMP (M001=0) N040
N151 SET REFFRQ=H012; Move back to pre-stop
N152 JMP (M001=0) N040
N153 JMP (IS01=0) N152
N154 WAIT H004
N155 JMP N120; Feed
N190 JMP N040

END ;End of program
```

Service

LTi DRiVES offers a lot of information via internet.

Please visit our homepage - http://www.lt-i.com - for further technical information of our products or engineering, or contact your nearest local office.

Software-Update-Service

As a part of our product maintenance function we are continuously improving the quality of the drive systems. Our software-update-service provides you with information on new releases and revisions of the various software versions.

This information, together with the latest firmware, is available for downloading on our info server.

Design-In

An important part for a common success is a professional project management, to keep the time and cost schedule. The earlier your new solution will enter the market the better. We will assist you in:

- the analysis of the requirements
- engineering and design
- working out the specification
- the analysis of the total costs
- the project management

Logistics

We are of course willing to support your logistic concept and it would be a pleasure to coordinate the following with you:

- KANBAN-concept
- KANBAN with control via webcam
- Buffer storage
- Delivery just in time
- Complete shipment of systems
- Commissioning
- Delivery of replacement parts and devices

After Sales

We will assist and support you whenever and wherever it is required. Based on our flexibility, quick reaction times, high technical know-how and a lot of application experience we offer the following services

- Commissioning on site
- Advice and Trainings
- Repair/ Service concept

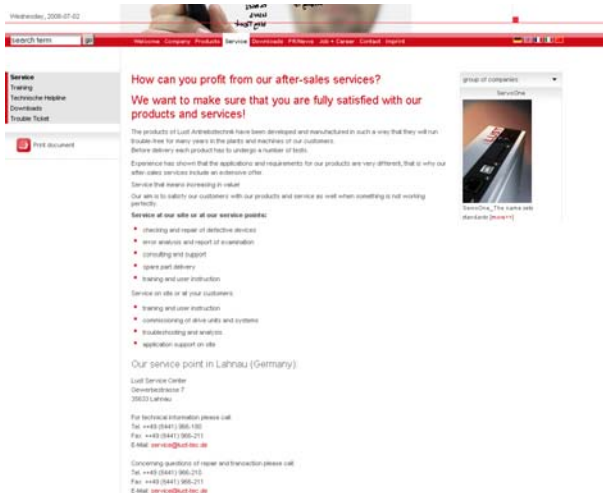

Helpline

The helpline will be glad to support you with:

- commissioning of standard products and systems by phone
- evaluation of error and diagnose indications
- localizing and clearing of reproducible failures and
- software-updates

Availability:

Mo.-Th.: 8 a.m. to 4.30 p.m.
Fr.: 8 a.m. to 4 p.m.

Fon: +49 (0) 6441/966-180
Fax: +49 (0) 6441/966-177

e-mail: helpline@lt-i.com

Overview inverter modules 0.7 to 15 kW

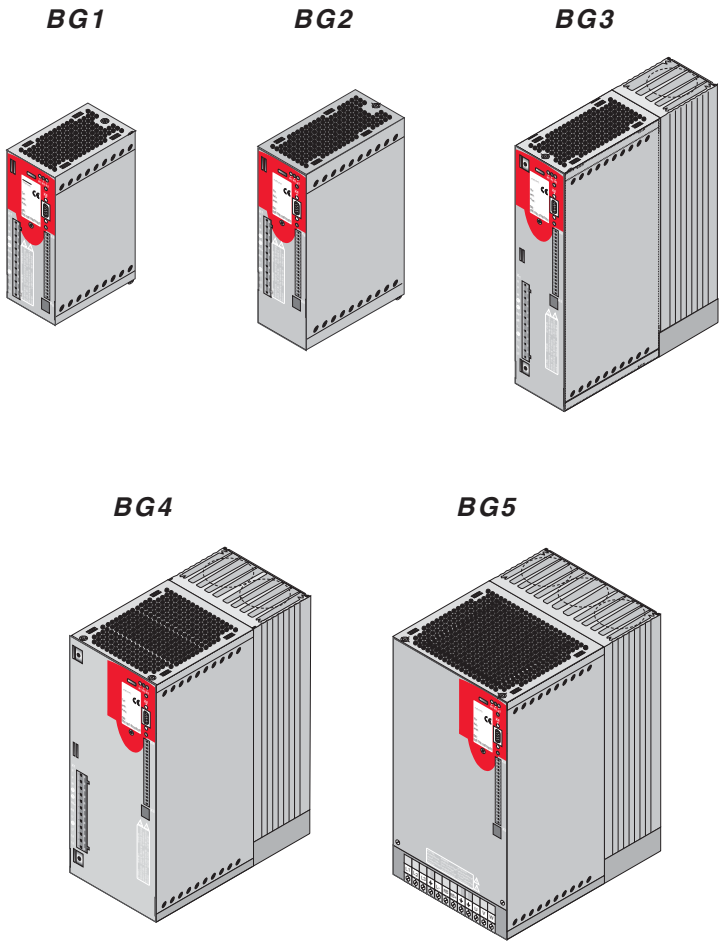

Inverter series CDA3000 size	BG1	BG2	BG2	BG3	BG4	BG5
Inverter power stages	0.75 kW	1.1 kW 1.5 kW	0.75 kW 1.5 kW 2.2 kW	3.0 kW 4.0 kW	5.5 kW 7.5 kW	11 kW 15 kW
Mains voltage	1 x 208, 230, 240 V		3 x 400, 440, 460 V			
Output current	1.8-fold rated current for 30 s					
Basic-firmware	incl. in standard delivery					
PLC-firmware	Available on CD-ROM, see chapter „ accessories for inverter modules“. Software can be load in any inverter module.					
Page	2 - 4	2 - 6	2 - 4 2 - 6	2 - 8	2 -10	2 - 12

Current capacity of inverter modules

The maximum allowed inverter output current and the peak current are depending on the mains voltage, the motor cable length, the power stage switching frequency and the ambient temperature. A changing of the conditions causes a changing of the maximum allowed current capacity of the inverter modules. Please find the allowed current capacities under changed conditions in the following table, shown as characteristic lines.

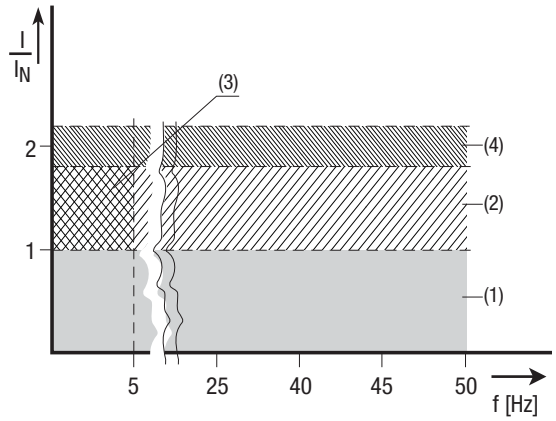

(1) Continuous mode

(2) Intermittent mode* > 5 Hz rotating field frequency

Inverter modules 0,7 to 15 kW
I/I_N = 1.8 for 30 s at 4 kHz
I/I_N = 1.8 for 30 s at 8 kHz
I/I_N = 1.8 for 30 s at 16 kHz

(3) Intermittent mode* 0 to 5 Hz rotating field frequency

Inverter modules 0,7 to 15 kW
I/I_N = 1.8 für 30 s at 4 kHz
I/I_N = 1..25-1.8 for 30 s at 8 kHz

(4) Pulse mode

Inverter modules 0,7 to 15 kW
I/I_N = approx. 2.2 at 4, 8, 16 kHz

* Intermittent mode $I_N > I_{eff}$

$$I_{eff} = \sqrt{\frac{1}{T} \cdot \Sigma_{i=1}^{n} I_i^2 \cdot t_i}$$

Features

Inverter modules for 230 V systems:

Inverter module	Rec. 4-pole standard motor [kW]	Switching frequency of power stage [kHz]	Rated current [A]	Peak curent for intermittent mode 0 to 5 Hz [A]	Peak current for intermittent mode > 5 Hz [A]
CDA32.004,Cx.x[1)]	0.75	4 8 16	4 4 3	7.2 7.2 5.4	7.2 7.2 5.4
CDA32.006,Cx.x[1)]	1.1	4 8 16	5,5 5,5 4,3	9.9 9.9 7.7	9.9 9.9 7.7
CDA32.008,Cx.x[1)]	1.5	4 8 16	7,1 7,1 5,5	12.8 12.8 8	12.8 12.8 9.9

Peak current for 30 s at inverter modules 0.7 to 15 kW
Cooling air temperature 45 °C at power stage switching frequency 4 kHz
40 °C at power stage switching frequency 8, 16 kHz
1) with heat sink HS3... or additional cooling surface

Mains voltage 1 x 230 V -20 % +15 %
Motor cable length 10 m
Mounting height 1000m above MSL
End-to-end mounting

Inverter modules for 400/460 V systems:

Inverter module	Rec. 4-pole standard motor [kW]	Switching frequency of power stage [kHz]	Rated current I_N[A] at 400 V[2)]	Rated current I_N[A] at 460 V[3)]	Peak current for intermittend mode 0 to 5 Hz [A]	Peak current for intermittend mode > 5 Hz [A]
CDA34.003,Cx.x	0.75	4 8 16	2.2 2.2 1.0	2.2 2.2 1.0	4 4 1.1	4 4 1.8
CDA34.005,Cx.x[1)]	1.5	4 8 16	4.1 4.1 2.4	4.1 3.6 -	7.4 7.4 4.3	7.4 7.4 4.3
CDA34.006,Cx.x[1)]	2.2	4 8 16	5.7 5.7 2.6	5.7 5.7 -	10.3 10.3 4.7	10.3 10.3 4.7
CDA34.008,Wx.x	3.0	4 8 16	7.8 7.8 5	7.8 7.8 -	14 14 7.8	14 14 9
CDA34.010,Wx.x	4.0	4 8 16	10 10 6.2	10 8.8 -	18 16.5 7.8	18 18 11
CDA34.014,Wx.x	5.5	4 8 16	14 14 6.6	14 12.2 -	25 21 9.2	25 25 11.9
CDA34.017,Wx.x	7.5	4 8 16	17 17 8	17 13.5 -	31 21,2 9.2	31 31 14.4
CDA34.024,Wx.x	11	4 8 16	24 24 15	24 24 -	43 40 22	43 43 27
CDA34.032,Wx.x	15	4 8 16	32 32 20	32 28 -	58 40 22	58 58 36

Peak current for 30 s at inverter modules 0.37 to 15 kW
Peak current for 60 s at inverter modules 22 to 15 kW
Cooling air temperature 45 °C at power stage switching frequency 4 kHz (up to CDA34.032)
40 °C at power stage switching frequency 8, 16 kHz (up to CDA34.032)
40 °C at power stage switching frequency 4 kHz (from CDA34.045)
1) with heat sink HS3... or additional cooling surface

2) Mains voltage 3 x 400 V ±10 %
3) Mains voltage 3 x 460 V ±10 %
Motor cable length 10 m
Mounting height 1000m above MSL
End-to-end mounting

Inverter modules up to 0.75 kW (BG1 + 2)

Type CDA-32.004, C1.0

Order code

CDA3 □.□□□, □x.x, □□, ... □□

- Technical data
- Cooling concept
- Version

For complete ordering data please refer to the following tables.

Techn. data \ Order code	CDA32.004	CDA34.003
Output, motor side		
Recommended rated power with 4-pole standard motor	0.75 kW	0.75 kW
Device rated power	1.7 kVA	1.6 kVA
Voltage	3 x 0 ... 230 V	3 x 0 ... 400/460 V[1)]
Effected rated current (I_N at 4/8 kHz)	4.0 A	2.2 A
Peak current 1,8 x I_N (4/8 kHz) for 30s	7.2 A[2)]	4.0 A[2)]
Rotating field frequency	0 ... 400 Hz	
Switching frequency of power stage	4, **8**, 16 kHz (factory setting 8 kHz at 40° C cooling air temperature)	
Input, mains side		
Mains voltage	1 x 230 V -20 % +15 %	3 x 460 V -25 % +10 %
Asymmetry of mains voltage	-	±3 % max.
Frequency	50/60 Hz ±10 %	
Power loss 4, 8 (16) kHz	48, 55 W	55, 70 W
Braking chopper power electronics		
Minimum ohmic resistance of an externally installed braking resistor	100 Ω	180 Ω

1) Allowed currents at 460 V are documented on page 2-2 and 2-3

2) For further data of currents see page 2-2 and 2-3

Colling method	CDA32.004, C x.x	CDA34.003, C x.x
Mechanics		
Protection type	IP20	
Cooling air temperature	45 °C (at 4 kHz switching frequeny of power stage)	
Weight	1.6 kg	2.3 kg
Mounting		
Single mounting	additional cooling via mounting plate (unvarnished) of 0.3 m²	
End-to-end mounting of multiple inverter modu-les	with accessories HS32.1BR	with accessories HS32.200 or HS34.2BR
Dimensions	**BG1 [mm]**	**BG2 [mm]**
W (width)	70	70
H (height)	193	218
D (depth)	120	145
A	50	50
C	205	230
E	215	240
D∅	∅ 4.8	∅ 4.8
Dimensional drawings	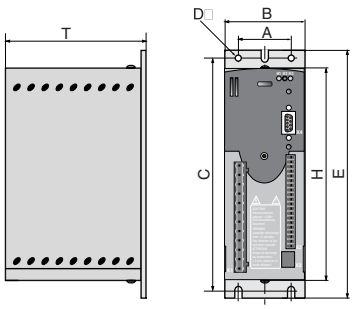	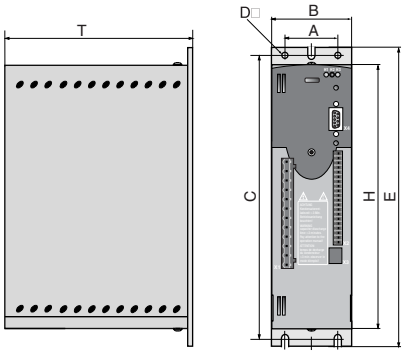

Note: For appropriated heat sinks see page 3-10.

Inverter module 1,1 to 2,2 kW (BG2)

Type CDA-34.004, C1.0

Order code

CDA3 □.□□□, □x.x, □□, ... □□

- Technical data
- Cooling method
- Version

For complete ordering data please refer to the following tables.

Techn. data / Order code	CDA32.006	CDA32.008	CDA34.005	CDA34.006
Output motor side				
Recommended rated power with 4-pole standard motor	1.1 kW	1.5 kW	1.5 kW	2.2 kW
Device rated power	2.3 kVA	3.0 kVA	3.0 kVA	4.2 kVA
Voltage	3 x 0 ... 230 V	3 x 0 ... 230 V	3 x 0 ... 400/460 V[1)]	3 x 0 ... 400/460 V[1)]
Effective rated current (I_N at 4/8 kHz)	5.5 A	7.1 A	4.1 A	5.7 A
Peak current 1,8 x I_N (4,8 kHz) for 30s	9.9 A[2)]	12.8 A[2)]	7.4 A[2)]	10.3 A[2)]
Rotating field frequency	0 ... 400 Hz			
Switching frequency of power stage	4, **8**, 16 kHz (factory setting 8 kHz at 40 °C cooling air temperature)			
Input mains side				
Mains voltage	1 x 230 V -20 % +15 %	1 x 230 V -20 % +15 %	3 x 460 V -25 % +10 %	3 x 460 V -25 % +10 %
Asymmetry of mains voltage	-	-	±3 % max.	
Frequency	50/60 Hz ±10 %			
Power loss 4, 8 (16) kHz	75/ 82 W	95/ 105 W	80/ 112 W	106/ 148 W
Braking chopper power electronics				
Peak braking power with internal braking resistor (only versionCDA34 ..., Wx.x, BR)	-	-	-	1,6 kW at 360 Ω
Minimum ohmic resistance of an externally installed braking resistor	56 Ω	56 Ω	180 Ω	180 Ω

1) Allowed currents at 460 V are documented on page 2-2 and 2-.

2) For further data of currents see page 2-2 and 2-3.

Cooling method	CDA32.006, C x.x	CDA32.008, C x.x	CDA34.005, C x.x	Drawing
Mechanics				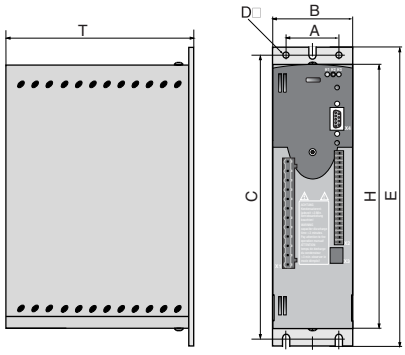
Protection type	IP20			
Cooling air temperature	45°C (at 4kHz switching frequency of power stage)			
Weight	2.3 kg			
Mounting				
Single mounting	additional cooling via switching cabinet mounting plate (unvarnished) of 0.3 m²			
End-to-end mounting of multiple inverter modules	only with accessories HS32.200 or HS32.2BR		only with accessories HS32.200 / HS34.2BR	
Dimensions	**BG2** [mm]			
W (width)	70			
H (height)	218			
D (depth)	145			
A	50			
C	230			
E	240			
D	∅ 4.8			vertical mounting, Cold Plate

Cooling method	CDA34.006, W x.x	Drawing
Mechanics		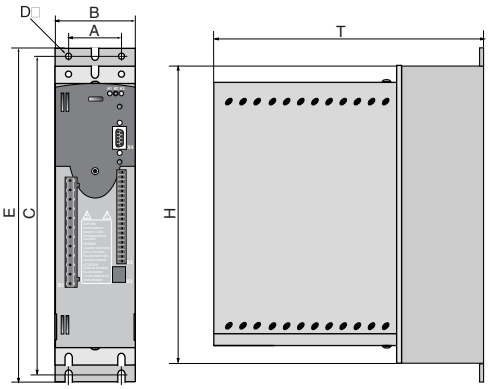
Protection type	IP20	
Cooling air temperature	45°C (at 4kHz switching frequency of power stage)	
Weight	3.5 kg	
Dimensions	**BG2[mm]**	
W (width)	70	
H (height)	240	
D (depth)	220	
A	40	
C	260	
E	270	
D	∅ 4.8	vertical mounting, Cold Plate

Version	Characteristics
CDA34.006,Wx.x,BR	Internal braking resistor

Note: For appropriate heat sinks see page 3-10.

Inverter module 3,0 and 4,0 kW (BG3)

Type CDA-34.008, W1.0

Order code

CDA3 □.□□□, □x.x, □□, ... □□

- Technical Data
- Cooling method
- Version

For complete ordering data please refer to the following tables.

Techn. data / Order code	CDA34.008	CDA34.010
Output motor side		
Recommended rated power with 4-pole standard motor	3.0 kW	4.0 kW
Device rated power (400V)	5.7 kVA	7.3 kVA
Voltage	3 x 0 ... 400/460 V[1)]	
Effective rated current (I_N at 4/8 kHz)	7.8 A	10 A
Peak current 1,8 x I_N (4 kHz) for 30 s	14 A[2)]	18 A[2)]
Rotating field frequency	0 ... 400 Hz	
Switching frequency of power stage	4, **8**, 16 kHz (factory setting 8 kHz at 40 °C cooling air temperature)	
Input mains side		
Mains voltage	3 x 460 V -25 % +10 %	3 x 460 V -25 % +10 %
Asymmetry	±3 % max.	
Frequency	50/60 Hz ±10 %	
Power loss 4, 8 (16) kHz	135/ 162 W	172/ 207 W
Braking chopper power electronics		
Peak braking power with internal braking resistor (only versionCDA34 ..., Wx.x, BR)	6.0 kW at 90 Ω	6.0 kW at 90 Ω
Minimum ohmic resistance of an externally installed braking resistor	81 Ω	81 Ω

1) Allowed currents at 460 V are documented on page 2-2 and 2-3

2) For further data of currents see page 2-2 and 2-3

	CDA34 ..., W x.x	CDA34 ..., C x.x	CDA34 ..., D x.x
Cooling methodt	**Wall mounting**	**Cold Plate**	**Push-through heat sink**
Mounting method	vertical mounting, unhindered air flow	vertical mounting on mounting plate or cooling profile section	vertical mounting, heat sink pushed through mounting plate
Protection kind	IP20	IP20	IP20 (device) IP54 (heat sink size)
Cooling air temp.	45°C (at 4 kHz switching frequency of power stage)		
Weight	4.4 kg	3.2 kg	4.6 kg
Maße	**BG3 [mm]**	**BG3 [mm]**	**BG3 [mm]**
W (width)	70	70 (100)	70 (110)
H (height)	300	300	300
D (depth)	218	150	T1 138, T2 80
A	40	85	90
C	320	200	320
D	∅ 4.8	∅ 5.5	∅ 4.8
E	330	--	340
F	--	100	200

Drawings

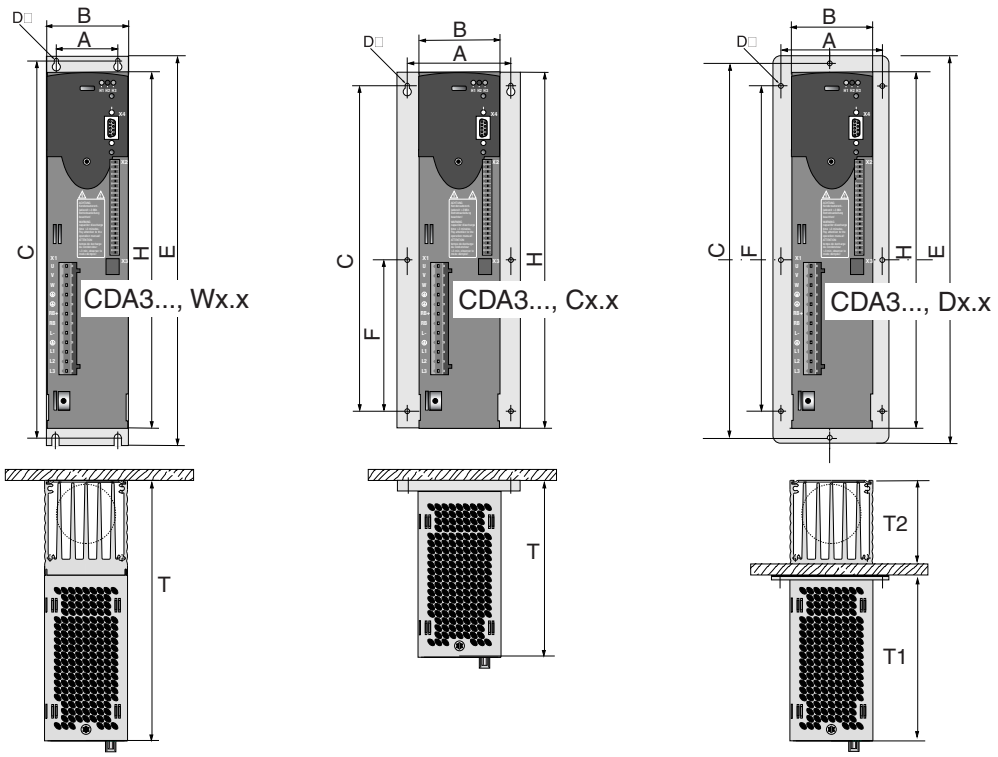

Version	Characteristics
CDA34.xxx,BR	Internal braking resistor only for devices with cooling method **CDA34 ...., Wx.x** or **CDA34 ...., Dx.x**

Note: Please note that for the cold plate and push-through heat sink cooling methods special conditions regarding the dissipation of power loss must be met. For more details see CDA3000 operation manual.

Inverter module 5,5 and 7,5 kW (BG4)

Type CDA-34.014, W1.0

Order code

CDA3 □.□□□, □x.x, □□, ... □□

Technical Data

Cooling method

Version

For complete ordering data please refer to the following tables.

Techn. data / Order code	CDA34.014	CDA34.017
Output motor side		
Recommended rated power with 4-pole standard motor	5.5 kW	7.5 kW
Device rated power (400V)	10.2 kVA	12.4 kVA
Voltage	3 x 0 ... 400/460V[1)]	
Effective rated current (I_N at 4/8 kHz)	14 A	17 A
Peak current 1,8 x I_N (4 kHz) for 30 s	25 A[2)]	31 A[2)]
Rotating field frequency	0 ... 400 Hz	
Switching frequency of power stage	4, **8**, 16kHz (factory setting 8 kHz at 40 °C cooling air temperature)	
Input mains side		
Mains voltage	3 x 460 V -25 % +10 %	3 x 460 V -25 % +10 %
Asymmetry	±3 % max.	
Frequency	50/60Hz ±10%	
Power loss 4, 8 (16) kHz	210, 268 W	255, 325 W
Braking chopper power electronics		
Peak braking power with internal braking resistor (only versionCDA34 ..., Wx.x, BR)	6.0 kW at 90 Ω	6.0 kW at 90 Ω
Minimum ohmic resistance of an externally installed braking resistor	47 Ω	47 Ω

1) Allowed currents at 460 V are documented on page 2-2 and 2-3.

2) For further data of currents see page 2-2 and 2-3.

	CDA3..., W x.x	CDA3..., C x.x	CDA3..., D x.x
Cooling method	**Wall mounting**	**Cold Plate**	**Push-through heat sink**
Mounting method	vertical mounting, unhindered air flow	vertical mounting on mounting plate or cooling profile section	vertical mounting, heat sink pushed through mounting plate
Protection kind	IP20	IP20	IP20 (device) IP54 (heat sink side)
Cooling air temp.	45°C (at 4 kHz switching frequency of power stage)		
Weight	6.5 kg	5.2 kg	6.7 kg
Dimensions	**BG4 [mm]**	**BG4 [mm]**	**BG4 [mm]**
W (width)	120	120 (150)	120 (160)
H (height)	300	300	300
D (depth)	218	150	T1 138, T2 80
A	80	135	A 140 , A1 80
C	320	200	320
D	∅ 4.8	∅ 5.5	∅ 4.8
E	330	--	340
F	--	100	200

Drawings

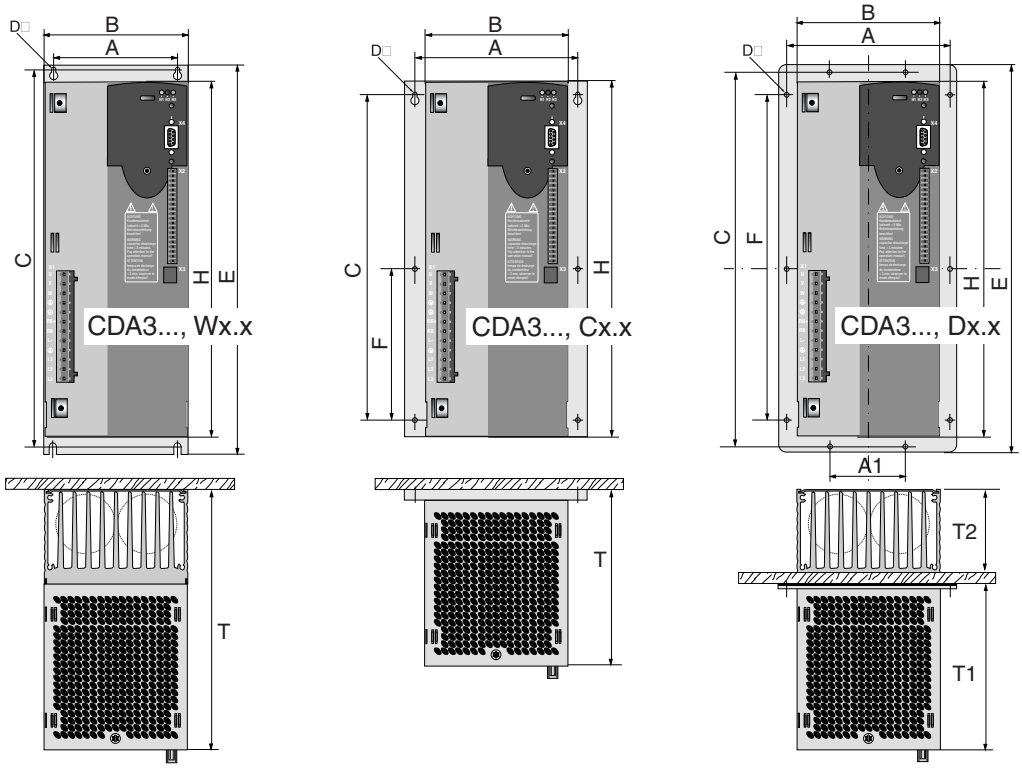

Version	Characteristics
CDA34.xxx,BR	Internal braking resistor only for devices with cooling method **CDA34 ...., Wx.x** or **CDA34 ...., Dx.x**

Note: Please note that for the cold plate and push-through heat sink cooling methods special conditions regarding the dissipation of power loss must be met. For more details see CDA3000 operation manual.

Inverter module 11 and 15 kW (BG5)

Type CDA-34.024, C1.0

Order code

CDA3 □.□□□, □x.x, □□, ... □□

- Technical Data
- Cooling method
- Version

For complete ordering data please refer to the following tables.

Techn. data / Order code	CDA34.024	CDA34.032
Output motor side		
Recommended rated power with 4-pole standard motor	11 kW	15 kW
Device rated power (400V)	17.5 kVA	23.3 kVA
Voltage	3 x 0 ... 400/460 V[1)]	
Effective rated current (I_N at 4/8 kHz)	24 A	32 A
Peak current 1,8 x I_N (4 kHz) for 30 s	43 A[2)]	58 A[2)]
Rotating field frequency	0 ... 400 Hz	
Switching frequency of power stage	4, **8**, 16 kHz (factory setting 8 kHz at 40 °C cooling air temperature)	
Input mains side		
Mains voltage	3 x 460 V -25 % +10 %	3 x 460 V -25 % +10 %
Asymmetry	±3 % max.	
Frequency	50/60 Hz ±10 %	
Power loss 4, 8 (16) kHz	315/ 400 W	400/ 510 W
Braking chopper power electronics		
Peak braking power with internal braking resistor (only versionCDA34 ..., Wx.x, BR)	6.0 kW at 90 Ω	6.0 kW at 90 Ω
Minimum ohmic resistance of an externally installed braking resistor	22 Ω	22 Ω

1) Allowed currents at 460 V are documented on page 2-2 and 2-3.
2) For further data of currents see page 2-2 and 2-3.

	CDA3 ..., W x.x	CDA3 ..., C x.x	CDA3 ..., D x.x
Cooling methodt	**Wall mounting**	**Cold Plate**	**Push-through heat sink**
Mounting method	vertical mounting, unhindered air flow	vertical mounting on mounting plate or cooling profile section	vertical mounting, heat sink pushed through mounting plate
Protection kind	IP20	IP20	IP20 (device) IP54 (heat sink side)
Cooling air temp.	45°C (at 4 kHz switching frequency of power stage)		
Weight	7.2 kg	6.4 kg	7.4 kg
Dimensions	**BG5 [mm]**	**BG5 [mm]**	**BG5 [mm]**
W (width)	170	170 (200)	170 (210)
H (height)	300	300	300
D (depth)	218	150	T1 138, T2 135
A	130	185	A 190 , A1 100
C	320	200	320
D	∅ 4.8	∅ 5.5	∅ 4.8
E	330	--	340
F	--	100	200

Drawings

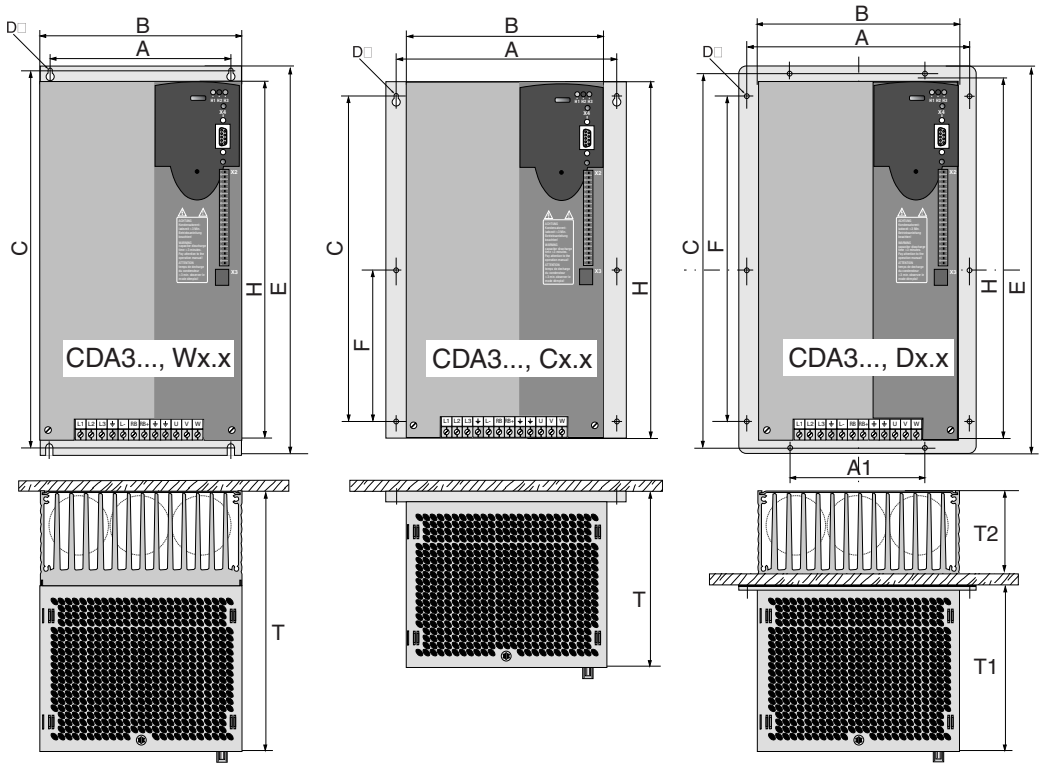

Version	Characteristics
CDA34.xxx,BR	Internal braking resistor only for devices with cooling method **CDA34 ...., Wx.x** or **CDA34 ...., Dx.x**

Note: Please note that for the cold plate and push-through heat sink cooling methods special conditions regarding the dissipation of power loss must be met. For more details see CDA3000 operation manual.

Overview of accessories for inverter module

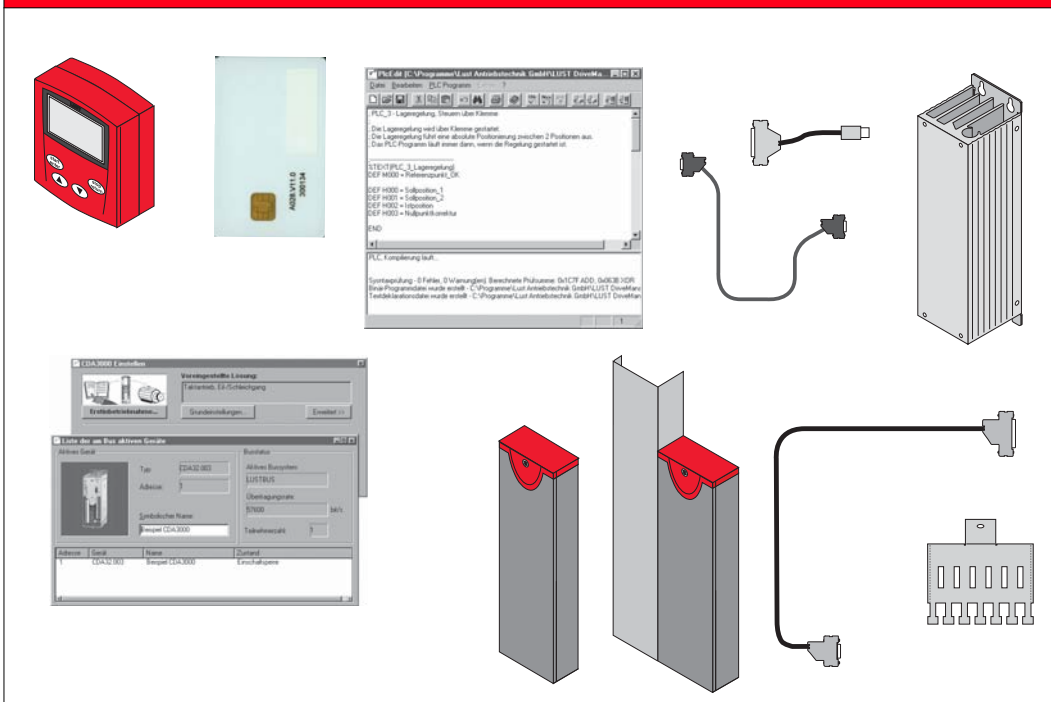

Accessory	Operator module	Memory card	PLC-Programming	User software	Connecting cable	Terminal cover
Type	KP100 KP200-XL KP300	SC-XL	PLCEditor	DRIVEMANAGER	CCD-SUB90X	TB1 ... TB5
Page	**3 - 2**	**3 - 3**	**3 - 4**	**3 - 5**	**3 - 6**	**3 -7**

Accessory	EMV-shield connection	Heat sink for BG1 + 2
Type	ST02 ... ST05 SMC50 SMB50	HS32.1BR HS32.200 HS32.2BR HS34.2BR
Page	**3 - 8**	**3 - 10**

Operator module

KP300

KP200-XL (Symbolic graph)

Order code

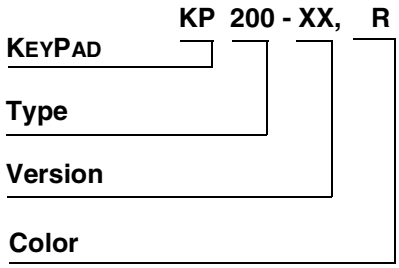

Order code	Short explanation
KP100 (w/o picture)	KEYPAD for parameter setting, actual value indication and serial commissioning of ED1200 inverter. The KEYPAD supports the SMARTCARD „SC“.
KP200-XL	KEYPAD for parameter setting, actual value indication and serial commissioning of inverter modules with firmware: „**Basis, HF and PLC**“. The KEYPAD (standard execution is grey, deliverable in red) supports the SMARTCARD „SC-XL“.
KP300	KEYPAD with graphical display (128 x 64 Pixel) for parameter setting, actual value display and serial commissioning of positioning controllers. Graphical display including device status and parameter texts. Language: German or English (configurable). The KEYPAD (grey) supports the SMARTCARD "SC-XL".

Mechanic KP100 (w/o picture)	
Dimension	62 x 158 x 21 mm (W x H x D)
Weight	170 g
Mechanic KP200 und	
Dimension (see picture)	70 x 73 x 33 mm (W x H x D)
Weight	150 g
Connection (RS232)	
Standard (6)	can be plugged directly into inverter module

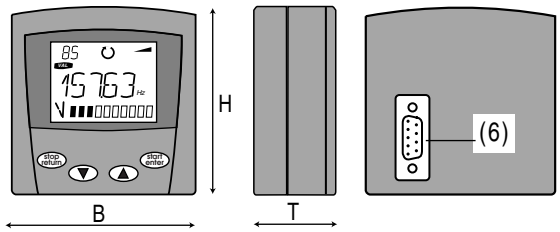

Mechanism KP300	
Dimensions	70 x 84 x 37 mm (W x H x D)
Weight	120 g
Connection (RS232)	
Standard (1)	Can be plugged directly into the positioning controller

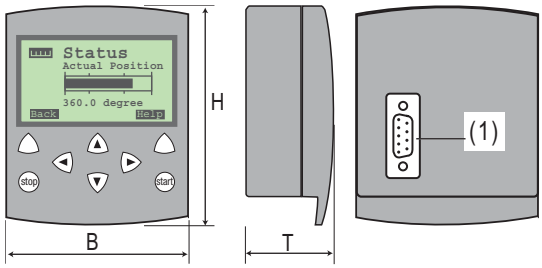

Cable connection	Installation in switching cabinet door
Connection between KP200/ KP200-XL and inverter module CDA3000 via cable CCD-SUB90X	Mounting in the cabinet door requires two holes for the fixing screws and a break-through for the connector. Pleae use only self-tapping screws for thermoplastics (e.g. EJOT PT screw, Type K30 x 8 WN1412).

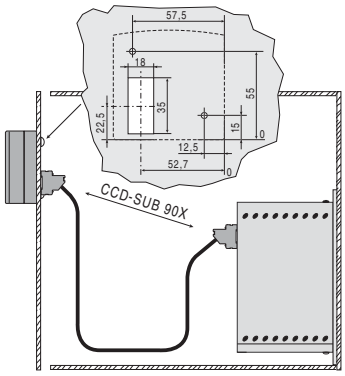

SMARTCARD	Order code
	SC - XX SMARTCARD Memory version

Order code	Short explanation
SmartCard for all KeyPads: SC-XL	Data set of inverter modules with firmware „PLC“ can be saved and transfered to further inverter modules without problems. Suitable for KP200-XL/KP300.

System layout	Explanation
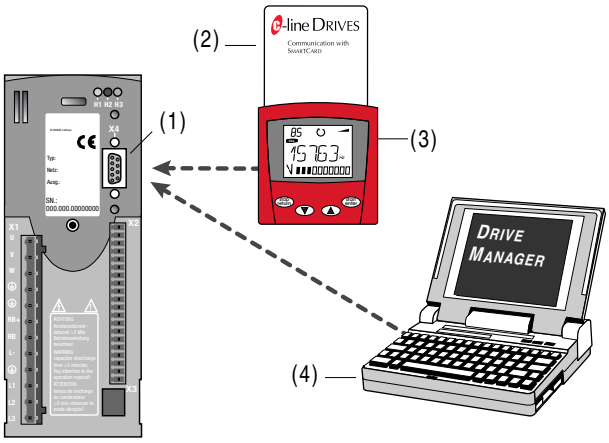	(1) Connection X4 for operating modules or PC-connection (RS232 interface) (2) Chip card SC-XL (3) Operator module KP200-XL/KP300 (4) PC with user software DRIVEMANAGER

PLC-software package	Order code
	PLCEditor PC User Software

PLCEditor

Order code / Techn. data	PLC-editor
Software performance	PC-User software „PLCEditor“ is a supplement to the DRIVEMANAGER: • Editor for making of PLC-process program • Program-Handling — Load/ Save/ Print/ Regeneration of programs — Load/ Save a program from/in DRIVEMANAGER data set — Load/ Save a program from/in a connected drive device • Online-Help to the PLC-editor and to the command syntax with examples
Hard- and software requirements	- Microsoft Windows® 95/98/ME or Windows® NT, 2000, XP, Vista - Working memory (RAM) min 32 MB (recommended 64 MB) - CD-ROM drive (recommended read min. 24-fold)
Supply package	- 1 CD-ROM with PLC-program editor, PLC-program examples,
Languages	- During installation selected German or English.

Order code	Licences
PLC-Editor	- Contains the full scope for programming of the PLC-firmware. The software licence permits simultaneous use on any number of workstations.

PC-User Software	Order code
	DRIVEMANAGER, 3.x PC User Software Software version

DRIVEMANAGER 3.x

Order code / Techn. data	DRIVEMANAGER 3.x
Software performance	PC-User software „DRIVEMANAGER“ offers the following functions: - Can be operated via comfortable adjusting masks, so easy handling is guaranteed - Status indication to control the operation-specific actual values and references - Direct control of the inverter via PLC - Comfortable four-channel digital scope for real-time recording of actual values, like currentcurve or VFC-diagram - Comparing function for parameters, data management and print functions.
Hard- and software requirements	- Microsoft Windows® 95/98/ME or Windows® NT, 2000, XP, Vista - Working memory (RAM) min. 32 MB (recommended 64 MB) - CD-ROM drive (recommend min. 24-fold read)
Supply package	- 1 CD-ROM to install the user software DRIVEMANANGER
Languages	- At installation select German, English or French.

Order Code	Licences
DRIVEMANAGER 3.x TEST	- Contains the full scope of functions and is intended for test and demo purposes. The runtime is limited to 180 days from date of installation.
DRIVEMANAGER 3.x	- Contains the full scope for parameter setting, control and monitoring. Unlimited running time. The software licence permits simultaneous use on any number of workstations.

Connecting cable	Order code
	CC D-SUB 9 0x Connecting Cable Cable type D-SUB Cable length in meters

CCD-SUB 90x

Order code	Technical data
CCD-SUB 901	Cable for the connection between inverter module and KP200-XL, KP300 or inverter module and PC with DRIVEMANAGER, length 1 m
CCD-SUB 902	Cable for the connection between inverter module and KP200-XL, KP300 or inverter module and PC with DRIVEMANAGER, length 2 m
CCD-SUB 903	Cable for the connection between inverter module and KP200-XL, KP300 or inverter module and PC with DRIVEMANAGER, length 3 m

System layout	Explanation
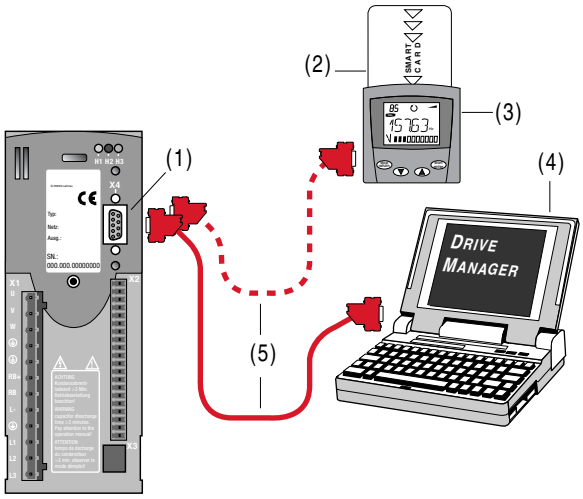	(1) Connection X4 for operator module or PC RS232 interface (2) Chipcard SMARTCARD (3) Operator module KP200-XL, KP300 (4) PC with user software DRIVEMANAGER (5) Connecting cable CCD-SUB90X, x.x

Terminal cover BG3	Terminal cover BG5	Order code
	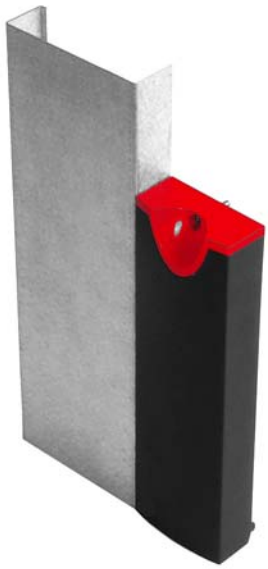	TB □ Terminal Box Size
TB3	TB5	

Order Code	TB1	TB2	TB3	TB4	TB5
Suitable for inverter module	CDA32.004	CDA32.006 CDA32.008 CDA34.003 CDA34.005 CDA34.006	CDA34.008 CDA34.010	CDA34.014 CDA34.017	CDA34.024 CDA34.032
Power output of inverter module	0.75 kW	1.1 kW 1.5 kW 0.75 kW 1.5 kW 2.2 kW	3.0 kW 4.0 kW	5.5 kW 7.5 kW	11.0 kW 15.0 kW
D(depth)	32.5 mm	32.5 mm	32.5 mm	32.5 mm	32.5 mm
Picture	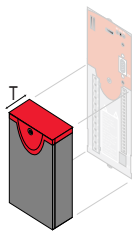	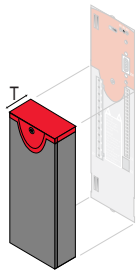	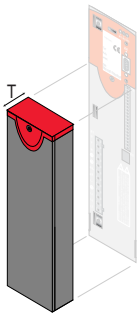	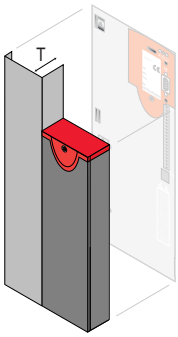	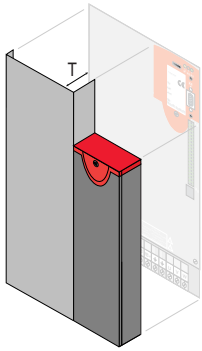

Hinweis: On inverter modules sizes 6, 7, 8 the terminal cover is included in delivery.

Shield connection

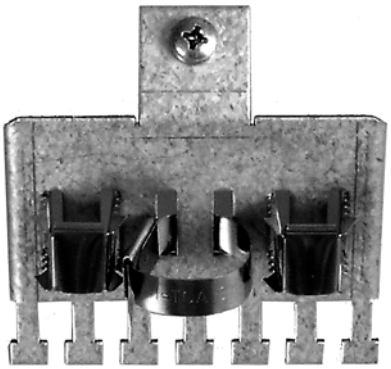

ST02 (incl. metal clips, metal cable binder and srew)

Order code

ST □□

Shield Terminator

Size

Order code / Techn. data	ST02			ST04	ST05
Suitable for inverter module	CDA32.004	CDA32.006 CDA32.008 CDA34.003 CDA34.005 CDA34.006	CDA34.008 CDA34.010	CDA34.014 CDA34.017	CDA34.024 CDA34.032
Output power of inverter module	0.75 kW	0.75 .. 2.2 kW	3.0 ... 4.0 kW	5.5 ... 7.5 kW	11.0 ... 15.0 kW
H (height)	238 mm	263 mm	345 mm	345 mm	355 mm
Pictures	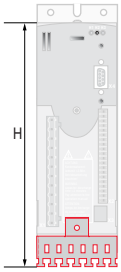	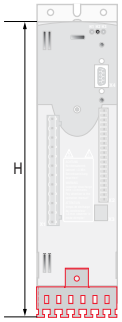	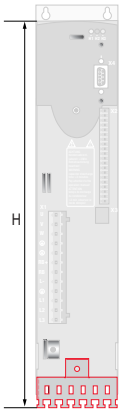	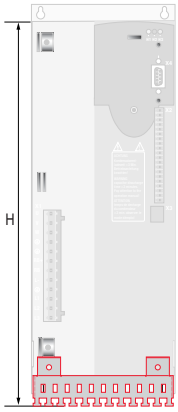	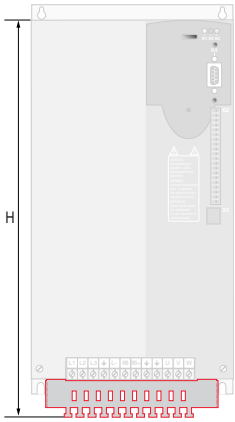

Metal clips

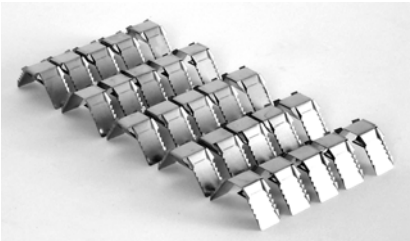

SMC50

Order code

SMC □□

Shield Metal Clip

360° - contacts

Quantity of packing unit

Order code	Packing unit	suitable for EMV-shielding	useable for cable shield diameter	Material
SMC50	50 pcs.	ST xx	< 12 mm²	spring steel

Metal cable band

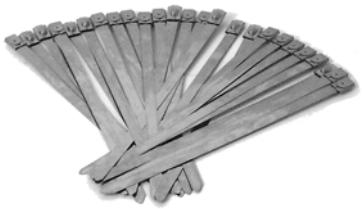

SMB50

OcCode

SMB □□

Shield Metal Band

360° - contacts

Quantity of packing unit

Order code	Packing unit	suitable for EMV-shielding	useable for cable shield diameter	Material
SMB50	50 pcs.	ST xx	> 12mm²	stainless steel

System layout

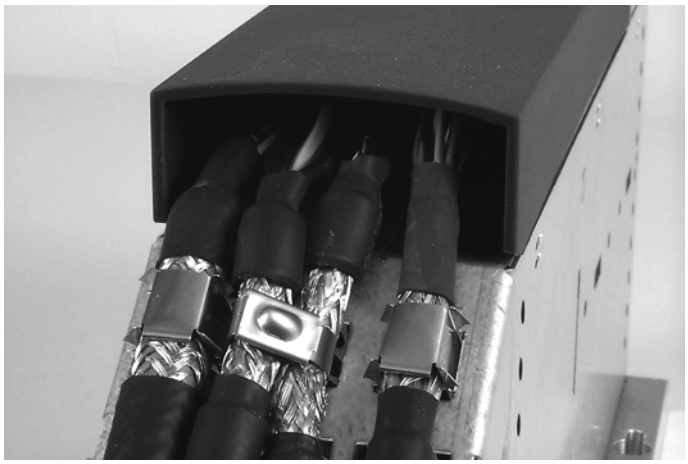

Heat sink/Braking resistor for BG1 + BG2

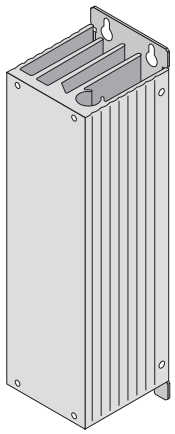

HS3X.xxx

Order code

HS 3□ .□ □□

- **Heat Sink**
- **Serie and Voltage**
- **Size**
- **Braking resistor**

Tech. data / Order code	HS32.1BR	HS32.200	HS32.2BR	HS34.2BR
Continuous braking power at mounting on inverter module	CDA32.004 / 25 W	-	CDA32.006 / 30 W CDA32.008 / 0 W	CDA34.003 / 35 W CDA34.005 / 5 W
Braking resistor	162 Ω	-	90 Ω	360 Ω
Peak braking power	0.9 kW	-	1.7 kW	1.6 kW
Heat sink for end-to-end mounting of inverter modules	-	CDA32.006 CDA32.008 CDA34.005	-	-

Order code	Dimensions / Description	W (Width) [mm]	H (Height) [mm]	D (Depth) [mm]	A [mm]	C [mm]	D [mm]	E [mm]
HS32.1BR	Heat sink with integrated braking resistor (230 V Net)	70	215	75	40	235	∅4.8	245
HS32.200	Heat sink	70	240	75	40	260	∅4.8	270
HS32.2BR	Heat sink with integrated braking resistor (230 V Net)							
HS34.2BR	Heat sink with integrated braking resistor (460 V Net)							
Drawings								

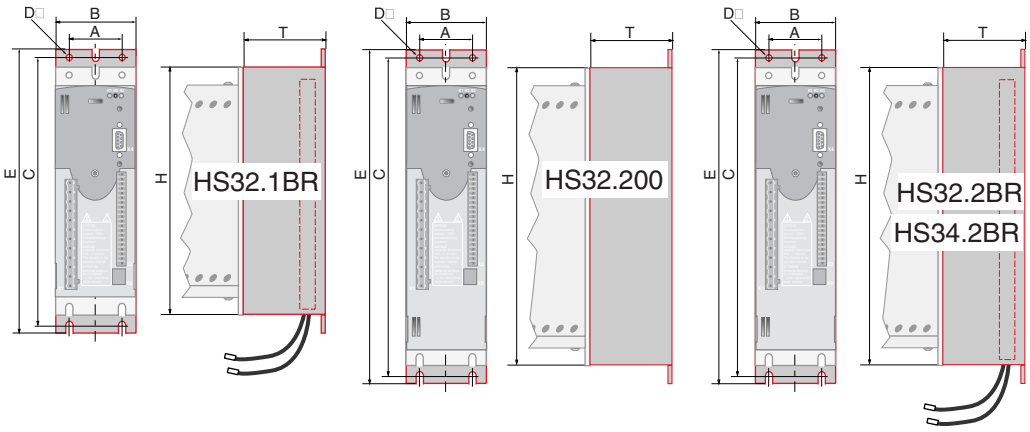

Overview user and communication modules

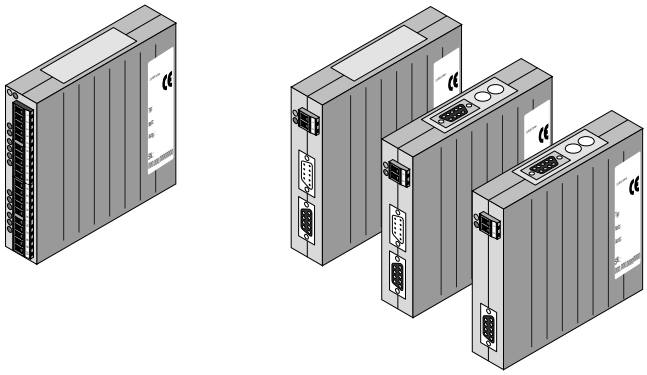

Index	User modules	Communication modules
Type	UM-8I4O	CM-CAN1 CM-CAN2 CM-DPV1
Page	4 - 2	4 - 3

User modules	Order code
	UM - □□□□ User Module Characteristics 8 I 4 O (e.g.) Terminal extension by 4 outputs Terminal extension by 8 inputs

UM-8I4O

Order code	Short description
UM-8I4O	Terminal extension by 8 inputs and 4 outputs, programmable functions of I/O's

Technical data	UM-8I4O		
Supply voltage	24 VDC ±20 %		
Current consumption	0.6 A		
Eight inputs	Input voltage for signal „0“		from 0 to 5 V
	Input voltage for signal „1“		>15 V
	Input voltage with signal „1“		3.5 mA to 7.0 mA (6 mA at24 VDC)
Four outputs	Output current	allowed range with signal „1“	min. 5 mA max. 0.5 A
		Mean	125 mA
		Total current	0,5 A
		Short-circuit current per output	max. 1.2 A short-time
Dimensions (W x H x D)	28 x 90 x 90 [mm]		

System layout UM-8I4O	Explanation
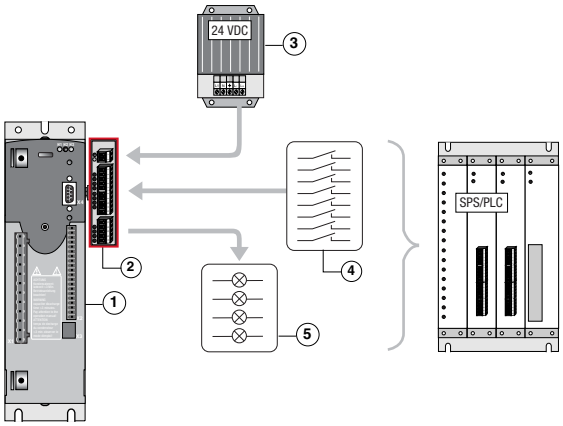	(1) Inverter module CDA3000 (2) User module UM-8I4O (3) External power pack 24 VDC (4) Eight control inputs (programmable) (5) Four control outpus (programmable)

Communication modules

CM-CAN1, CM-CAN2, CM-DPV1

Order code

CM - □□□□

Communication Module

Bus and/or Protocol

Order code	Short description
CM-CAN1	Communication module for CAN-Bus with data transfer protocol CAN_{Lust}
CM-CAN2	Communication module for CAN-Bus with data transfer protocol CAN_{open}
CM-DPV1	Communication module for PROFIBUS-DPV1 (for actual GSD-file see our homepage www.lt-i.com)

Technical data	CM-CAN1	CM-CAN2	CM-DPV1
Standardization	ISO 11898	ISO 11898	EN 50170
Communication	CiA/ DS102	CiA/ DS301	Directive 2.084
Device profile	DRIVECOM	CiA/ DS402	PROFIBUS
Transfer rate/ cable length	25 kBit/s up to 1000 m 500 kBit/s up to 100 m	20 kBit/s up to 1000 m 1 MBit/s up to 40 m	9.6 kBit/s up to 1200 m 12 MBit/s up to 100 m
Voltage supply	19 ... 29 VDC	18 ... 30 VDC	18 ... 30 VDC
Current consumption	max. 80 mA	max. 100 mA	max. 250 mA
Dimensions (W x H x D)	28 x 90 x 90 [mm]		

System layout CAN_{LUST}/ CAN_{open}	Explanation
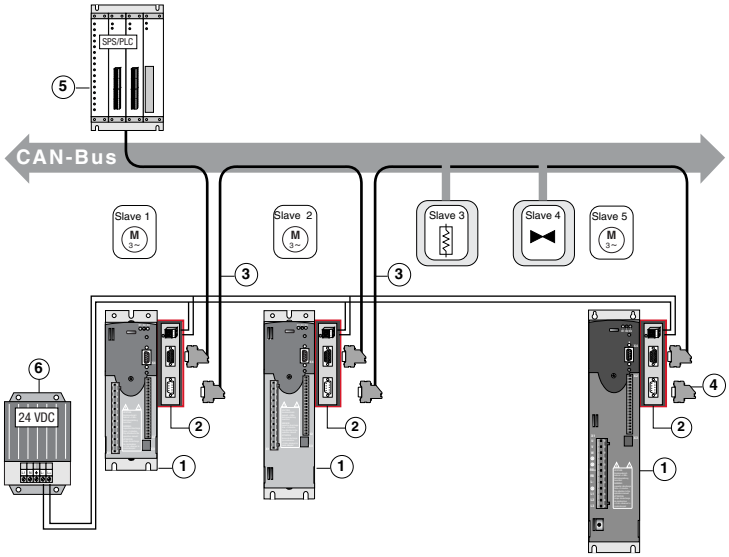	(1) Inverter module CDA3000 (2) Communication module CM-CAN1 or CM-CAN2 (3) Connecting cable CCD 90x, x.x (4) Bus termination plug (5) CAN-Bus control (6) Power pack (24 VDC) max. 100 stations

System layout PROFIBUS-DP	Explanation
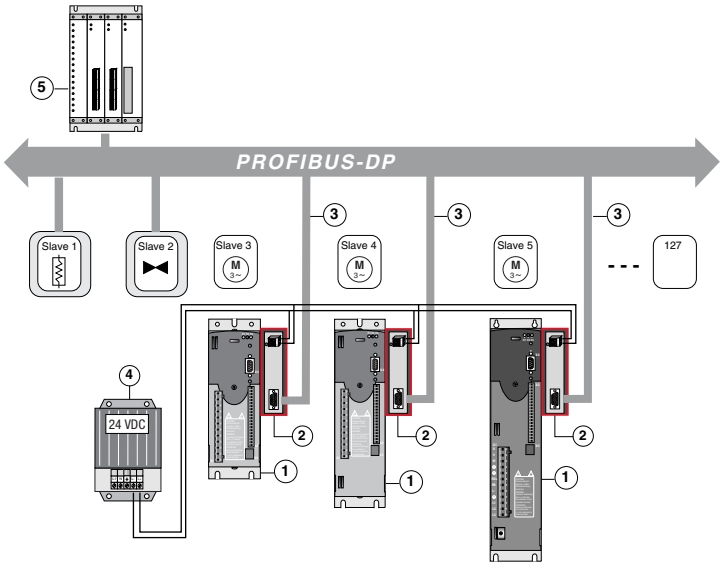	(1) Inverter module CDA3000 (2) Communication module CM-DPV1 (3) PROFIBUS-DP system cable (4) Power pack 24 VDC (5) DP-Master max. 127 stations

Overview supplementary components

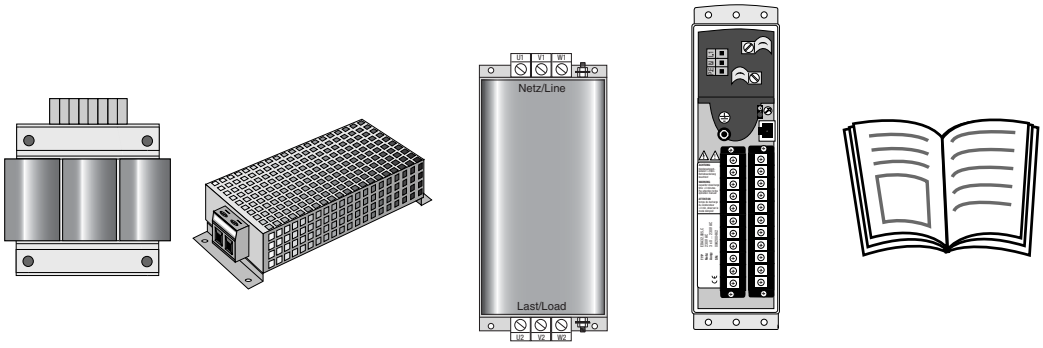

Index

	Line chokes	Braking resistors	Mains filters	Inverter for simple applications	User information
Type	LR 32.4 ... ... LR32.8 LR34.4 ... ... LR34.32	BR-270.01, 540 ... BR-010.80, 541	EMCxxx.X	ED1200	all paper documents
Page	5 - 2	5 - 5	5 - 8	5 - 10	5 - 12

Line chokes

LR34.10

Order Code

LR - 3 □.□□□

- Line Reactor
- Series and voltage
- Rated current

Ambient conditions	LR 32. xxx	LR 34. xxx
Rated voltage	1 x 230 V, -20 % +15 %, 50/60 Hz[1)]	3 x 460 V, -25 % +10 %, 50/60 Hz[1)]
Overload factor	1.8 x I_N for 40 s	1.8 x I_N for 40 s up to rated current of 32 A 1.5 x I_N for 60 s from rated current of 45 A
Ambient temperature	-25° C up to +45° C, with power loss up to 60° C (1,3 % / °C)	
Monting height	1000 m, with power loss up to 4000 m (6 % / 1000 m)	
Relative humidity	15 ... 95 %, condensation not permitted	
Storage temperature	-25° C up to +70° C	
Protection kind	IP00, terminals VBG4	
Short-circuit voltage	U_K 4 % at 230 V = 9,2 V	U_K 4 % at 400 V = 9,24 V
Permissible contamination	P2 according to EN 61558-1	P2 according to EN 61558-1
Thermal configuration	$I_{eff} < I_N$	
UL-Recognition	Execution LR3X.xxx-UR has the UL-Recognition for the markets in USA and Canada	

[1)] at mains frequency 60 Hz the power loss increases by approx. 5 - 10 %.

Single-phase line chokes

Techn. data / Order code	Suitable for inverter modules	Rated current [A]	Power loss total [W]	Inductance [mH]	Weight [kg]	Connection [mm²]
LR32.5/ LR32.5-UR[1)]	CDA32.004, ED1200 (Recommended rated power with 4-pole standard motor = 550 W)	4.5	11	9.76	0.7	4
LR32.8/ LR32.8-UR	CDA32.004, ED1200	8	10	3.66	0.8	4
LR32.14/ LR32.14-UR	CDA32.006 CDA32.008	14	16	2.1	1.5	4

[1)] U_k = 6% at 230V = 13,8V (to conform to EN 61000-3-2).

Single-phase line chokes			
Dimensions [mm]	**LR32.8**	**LR32.5**	**LR32.14**
W (Width)	60	60	85
H (Height	75	75	100
D (Depth)	57	57	65
A	44	44	64
C	46	46	50
D	Ø 4.8	3.6	Ø 4.8
Drawing:	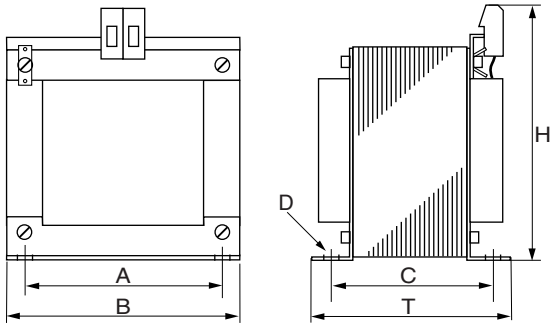		

Three-phase line chokes						
Techn. data / Order code	**Suitable for inverter modules**	**Rated current [A]**	**Power loss total [W]**	**Inductance [mH]**	**Weight [kg]**	**Connection [mm²]**
LR34.4/ LR34.4-UR	CDA34.003	4.2	20	7	1.6	4
LR34.6/ LR34.6-UR	CDA34.005 CDA34.006	6	26.1	4.88	2.0	4
LR34.8/ LR34.8-UR	CDA34.008	8	29	3,.66	2.4	4
LR34.10/ LR34.10-UR	CDA34.010	10	33	2.93	3.0	4
LR34.14/ LR34.14-UR	CDA34.014	14	45	2.09	3.8	4
LR34.17/ LR34.17-UR	CDA34.017	17	45	1.72	4.5	4
LR34.24/ LR34.24-UR	CDA34.024	24	50	1.22	5.8	4
LR34.32/ LR34.32-UR	CDA34.032	32	67	0.92	6.7	10

Three-phase line chokes								
Dimen-sions [mm]	**LR34.4**	**LR34.6**	**LR34.8**	**LR34.10**	**LR34.14**	**LR34.17**	**LR34.24**	**LR34.32**
W (Width)	100	125	125	125	155	155	155	190
H (Height	120	140	140	140	160	160	160	195
D (Depth)	70	65	65	75	80	80	95	85
A	63	100	100	100	130	130	130	170
C	50	47	47	57	57	57	74	57
DØ	5,8	5	5	5	8	8	8	8
Drawing:	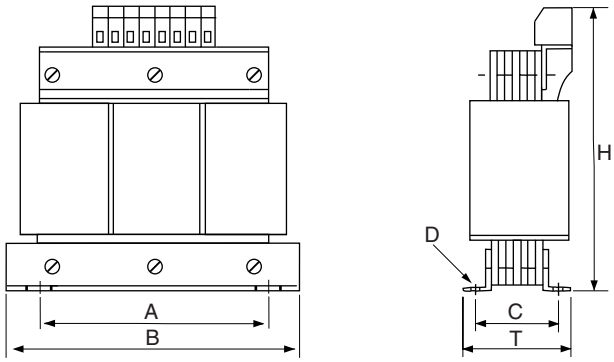							

System layout

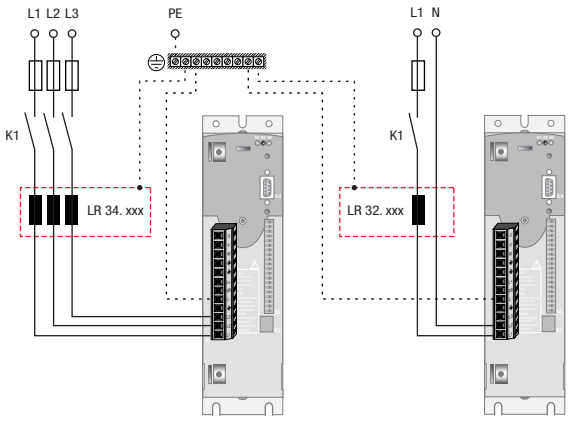

Braking resistor

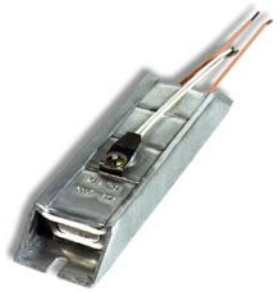

BR-090.01,540,UR

BR-090.02,540,UR

Order code

BR -□□□.□□,□□ □

- **Braking Res.**
- **Ω Value**
- **Power in [W]**
  01 = 100 W
  10 = 1 kW
- **Termination**
- **1 = with touch protection**
  0 = w/o touch protection

Design / Technical data	as per diagram A1	as per diagram A2	as per diagram A3	as per diagram A4
Surface temperature	> 250 °C	> 250 °C	> 250 °C	> 250 °C
Touch protection	no	no	no	no
Voltage	max. 970 V DC	max. 970 V DC	max. 970 V DC	max. 970 V DC
High-voltage strength	4000 V DC	4000 V DC	4000 V DC	4000 V DC
Temperature control	yes with bimetal protector (switching capacity 0.5 A/ 230 V)			
Acceptances	CE-konform; UL-Recognition			
Connection	1 m long PTFE - insulated litz wire			Terminal box with PG gland
Diagrams	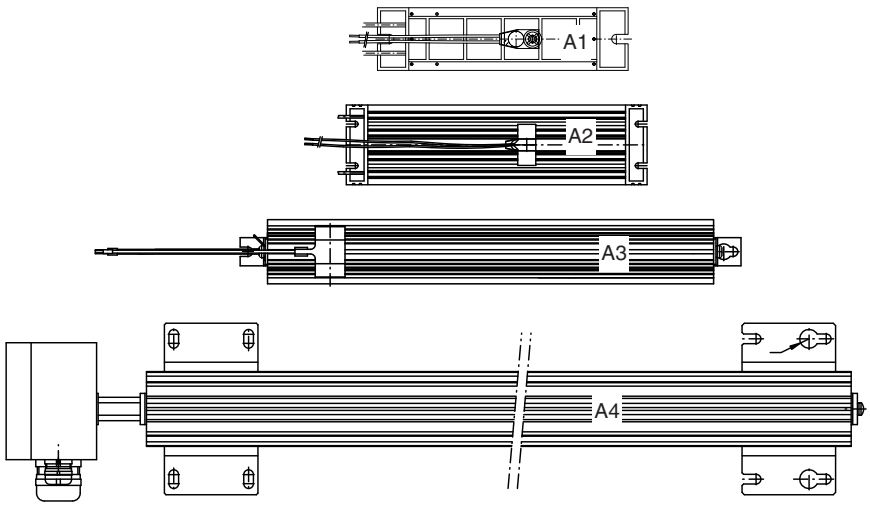			

Braking resistors

Techn. data / Order code	Cont. brake power [W]	Resistor [Ω ±10 %]	Peak braking power [W] 750 VDC[2)]	Protecion	Diagram
BR-200.01, 540,UR	35	90	2800	IP54	A1
BR-200.02, 540,UR	150	90	2800	IP54	A2
BR-200.03, 540,UR	300	90	2800	IP54	A3
BR-090.01, 540,UR	35	90	6250	IP54	A1
BR-090.02, 540,UR	150	90	6250	IP54	A2
BR-090.03, 540,UR	300	90	6250	IP54	A3
BR-090.10, 650,UR	1000	90	6250	IP65	A4
BR-026.01,540,UR	35	26	21600	IP54	A1
BR-026.02,540,UR	150	26	21600	IP54	A2
BR-026.03,540,UR	300	26	21600	IP54	A3
BR-026.10,650,UR	1000	26	21600	IP65	A4

System layout

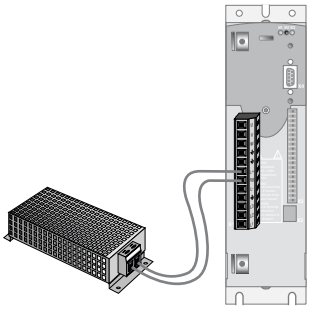

Dimension [mm]	BR-270.01, 540	BR-160.01, 540	BR-090.01, 540	BR-110.01, 540
W (Width)	40	80	42	114
H (Height	160	160	160	160
D (Depth)	26	26	26	26

Diagrams

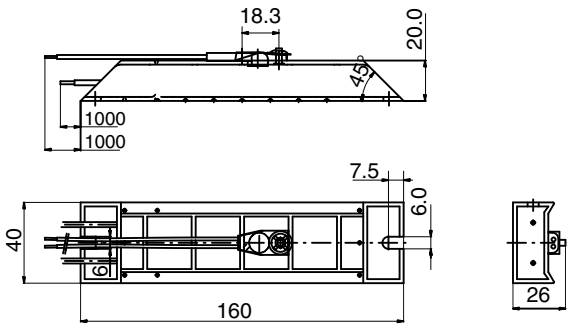
18.3
20.0
45°
1000
1000
7.5
6.0
40
6
160
26
A1

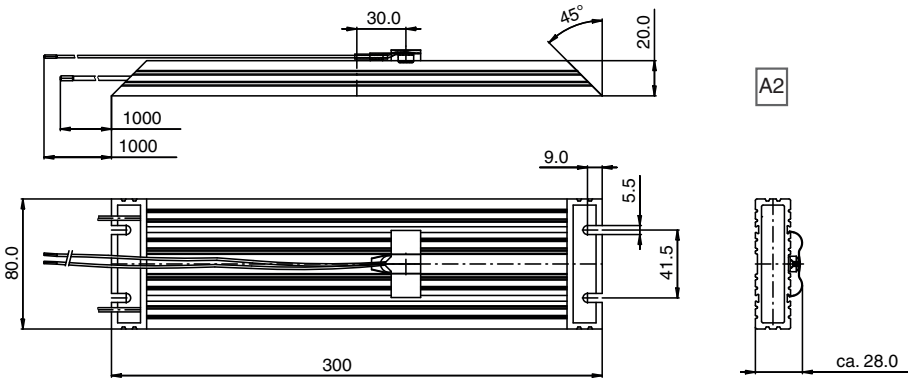
30.0
45°
20.0
1000
1000
9.0
5.5
80.0
41.5
300
ca. 28.0
A2

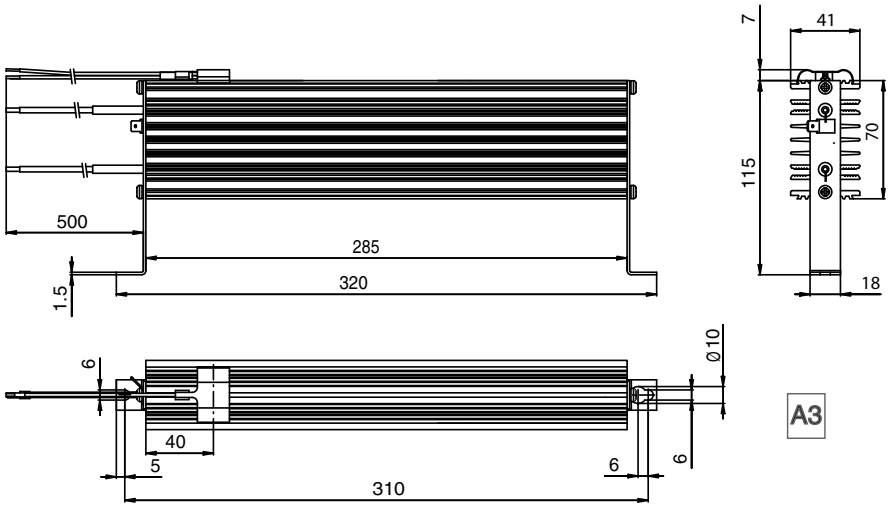
7
41
70
115
500
285
320
1.5
18
6
Ø10
40
5
6
6
310
A3

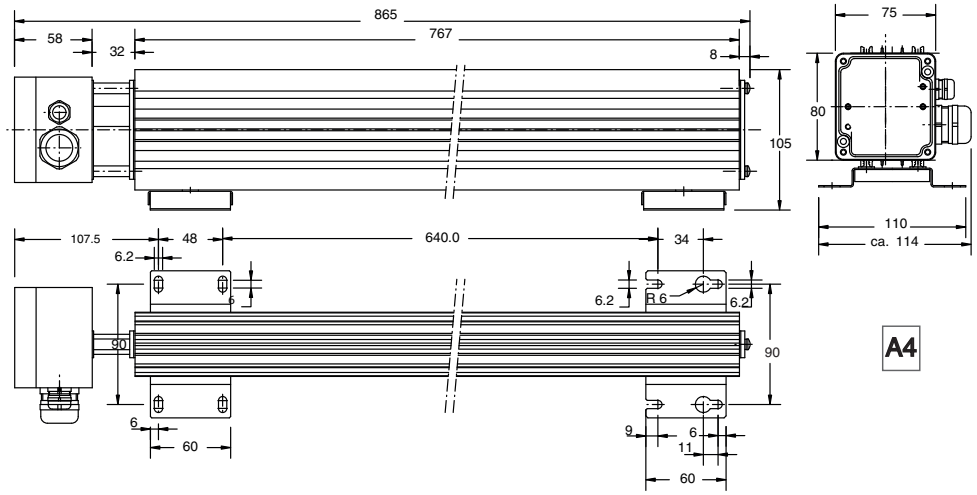
865
767
58
32
8
105
75
80
110
ca. 114
107.5
48
640.0
34
6.2
6.2
R 6
6.2
90
90
6
60
9
6
11
60
A4

Mains filters

EMC17

Order code

EMC □□□.□

- Electro Magnetic Compatibility
- Rated current
- Version

Ambient conditions	EMCxx.x
Mains voltage	3 x 480 V, max. +10 %, 50/60 Hz
Ambient temperature	typical -25° C up to +40° C, with power loss up to 60° C (1.3 % / ° C)
Mounting height	1000 m, with power loss up to 4000 m (6 % / 1000 m)
Relative humidity	15 ... 85 %, condensation not permitted
Transport / Storage temperature	-25° C up to +70° C/ -40° C up to +85° C
Protection	IP00, Input terminals VBG4
Permissible contamination	P2 according to EN 61558-1
UL-Recognition	Version EMCxxx-UR has UL Recognition for the USA and Canadian markets
Radio interference suppression EN61800-3 -residential-	Motor calbe length up to 100 m permitted
Radio interference suppression EN61800-3 -industrial-	Motor cable length up to 150 m permitted

Three-phase mains filters						
Techn. data / Order code	Suitable for inverter modules	Rated current [A]	Power loss total [W]	Inductance [mH]	Weight [kg]	Connection [mm²]
EMC 10.0	CDA34.008 CDA34.010	10	13	< 1.3	1.7	0.2...4, PE M5
EMC 17.0	CDA34.014 CDA34.017	17	21	< 1.2	1.8	0.2...4, PE M5
EMC 35.0	CDA34.024 CDA34.032	35	27	< 1.1	2.5	0.2...6, PE M5

1) Inverter modules (CDA34.045 to CDA34.250) have to be operated with line chokes.

Inverter ED12.005,C for simple applications

Order Code

ED 12 . □□□, □x.x

- Type
- Technical data
- Cooling method

For complete ordering data please refer to the following tables.

Order code / Techn. data	ED12.005
Output motor side	
Recommended rated power with 4-pole standard motor	0.25 kW up to 0.75 kW
Device rated power	1.4 kVA
Voltage	3 x 0 ... 230 V
Effective rated current (at 4/8 kHz)	3.5 A
Peak current (4/8 kHz) for 10 s	7.0 A
Rotating field frequency	0 ... 400 Hz
Switching frequency of power stage	4, **8** kHz (factory setting 8 kHz at 40° C cooling air temperature)
Input mains side	
Mains voltageq	1 x 230 V -20 % +15 %
Frequency	50/60 Hz ±10 %
Power loss (at 4/8 kHz)	35 W

Order code / Ambient cond.	ED12.005
Temperature range	
during operation	0 ... 40 °C, with power loss up to 50 °C (2,5 %/°C)
during storage	-25 ... +55 °C
during transport	-25 ... +70 °C
Relative humidity	15 ...85% no condensation
Mechanical strength (IEC68-2-6)	
stationary use	Vibration: 0.075 mm (10 ... 58 Hz) Shock: 9.8 m/s² (>9 ... 500 Hz)
during transport	Vibration: 3.5 mm (5 ... 9 Hz) Shock: 9.8 m/s² (>9 ... 500 Hz)
Protection	
Device	IP00 (NEMA 1)
Touch protection	VBG 4
Monting height	up to 1000 m above MSL, with power loss up to max. 2000 m above MSL

Norms/Acceptances	ED12.005
CE-mark	Conform to the requirements of the low voltage directive DIN EN 50178. The inverter is conform to the requirements for installation in a machine or plant under the terms of the Machinery Directive 98/37/EG.
UL-Approbation	The inverter ED1200 is „UL-Recognized“ . It is equivalent to UL and CSA for „UL-Recognized Components“.
EMV-acceptance	By taking the installation notes into consideration (see operation manual) the EMV product norm will EN 61800-3 will be met. Including • Public low voltage system: Residential areas up to 10 m motor cable length • Industrial low voltage system: Industrial area up to 25 m motor cable length

Cooling method	ED12.005, C x.x	Drawing
Mechanics		
Cooling air temperature	40 °C (at4/8 kHz switching frequency)	
Weight	1.3 kg	
Mounting method	vertical mounting	
Single mounting	Additional cooling via mounting plate (unvarnished) of 0.25 m²	
Dimensions	**[mm]**	
W (Width)	65	
H (Height)	233	
D (Depth)	120	
A	20	
C	220	
E	105	
D∅	∅ 4.8	

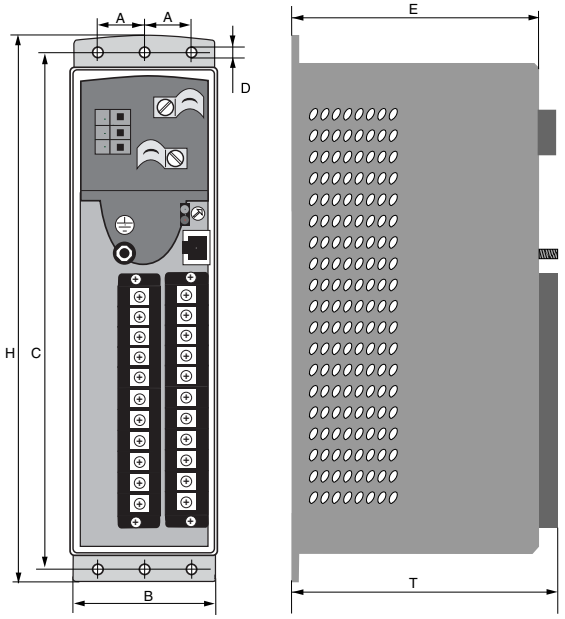

Order code		Short description
HS12.005		Heat sink for use at thermically insulated mounting areas
ED12.005,C1x.x with HS12.005		**Drawing**
Dimensions	[mm]	
W (Width)	65	
H (Height)	232.5	
D (Depth)	67.5	
A	32.5	
C	246.5	
D	∅ 4.8	
E	256.5	
F	187.5	
Weight	[kg]	
Heat sink	0.9	

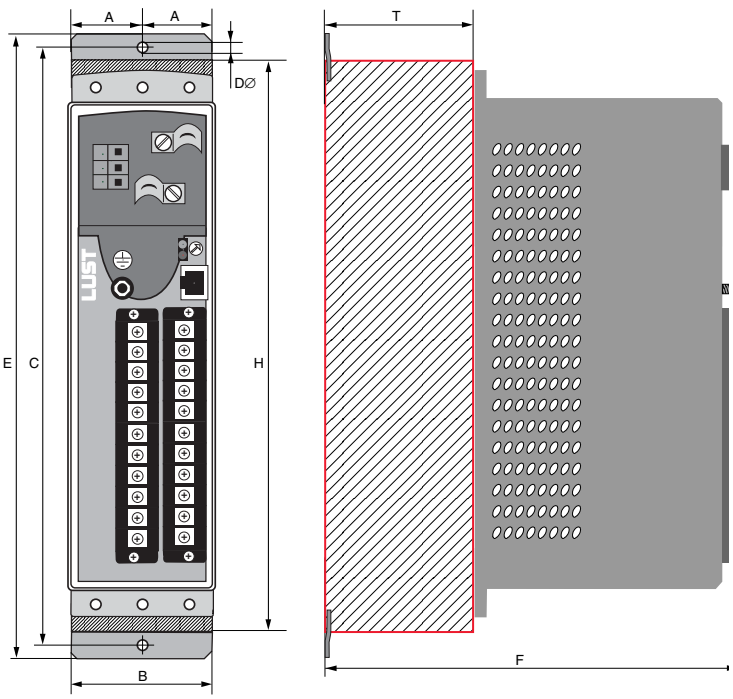

User information on paper (selection)

Order Code

0XXX . XXB . X-xx

Docu Id.-No.

Stand

For complete ordering data please refer to the following tables.

User information	Method	Order code	Language
Operating manual CDA3000	Presents the mechanical and electrical installation of the CDA3000 inverter module. Guide to quick and save inital commissioning.	0840.00B.x	German/English/ Frenchh/Italien/ Spain
Application manual CDA3000	Presents the adaptation of the drive system to the application (software-based).	0840.02B.x 0840.22B.x	German English
User manual, communica-tion modules CM-CAN1	Project planning, installation and commissioning of the CDA3000 to field bus CAN_{Lust} .	0916.01B.x 0916.21B.x	German English
User manual, communica-tion modules CM-CAN2	Project planning, installation and commissioning of the CDA3000 to field bus CAN_{open}.	0916.02B.x 0916.22B.x	German English
User manual communica-tion modules CM-DPV1	Project planning, installation and commissioning of the CDA3000 to field bus PROFIBUS-DP.	0916.00B.x 0916.20B.x	German English
CDA3000-PLC System manual	Presents machine sub-automation solutions with c-line DRIVES in connection with VTxxxx Operator Panels	0840.12B.x	German English
ED1200 Operating manual	Presents the mechanical and electrical installation of the ED 12.005,C inverter. Guide to quick and save initial commis-sioning.	0994.01B.x 0994.21B.x	German English

LTi DRiVES GmbH

Gewerbestr. 5-9
35633 Lahnau

GERMANY

Fon: +49 (0) 64 41 / 96 6-0
Fax: +49 (0) 64 41 / 9 66-1 37

Heinrich-Hertz-Str. 18
59423 Unna

GERMANY

Fon: +49 (0) 23 03 / 77 9-0
Fax: +49 (0) 23 03 / 77 9-3 97

www.lt-i.com
info@lt-i.com

We reserve the right to make technical changes.

The content of our Order Catalogue was compiled with the greatest care and attention, and based on the latest information available to us.

We should nevertheless point out that this document cannot always be updated in line with ongoing technical developments in our products.

Information and specifications may be subject to change at any time. Please visit www.lt-i.com for details of the latest versions.

Catalogue - CDA3000

Id.-Nr.: 0840.24B.6-00 • Stand: 08/2013